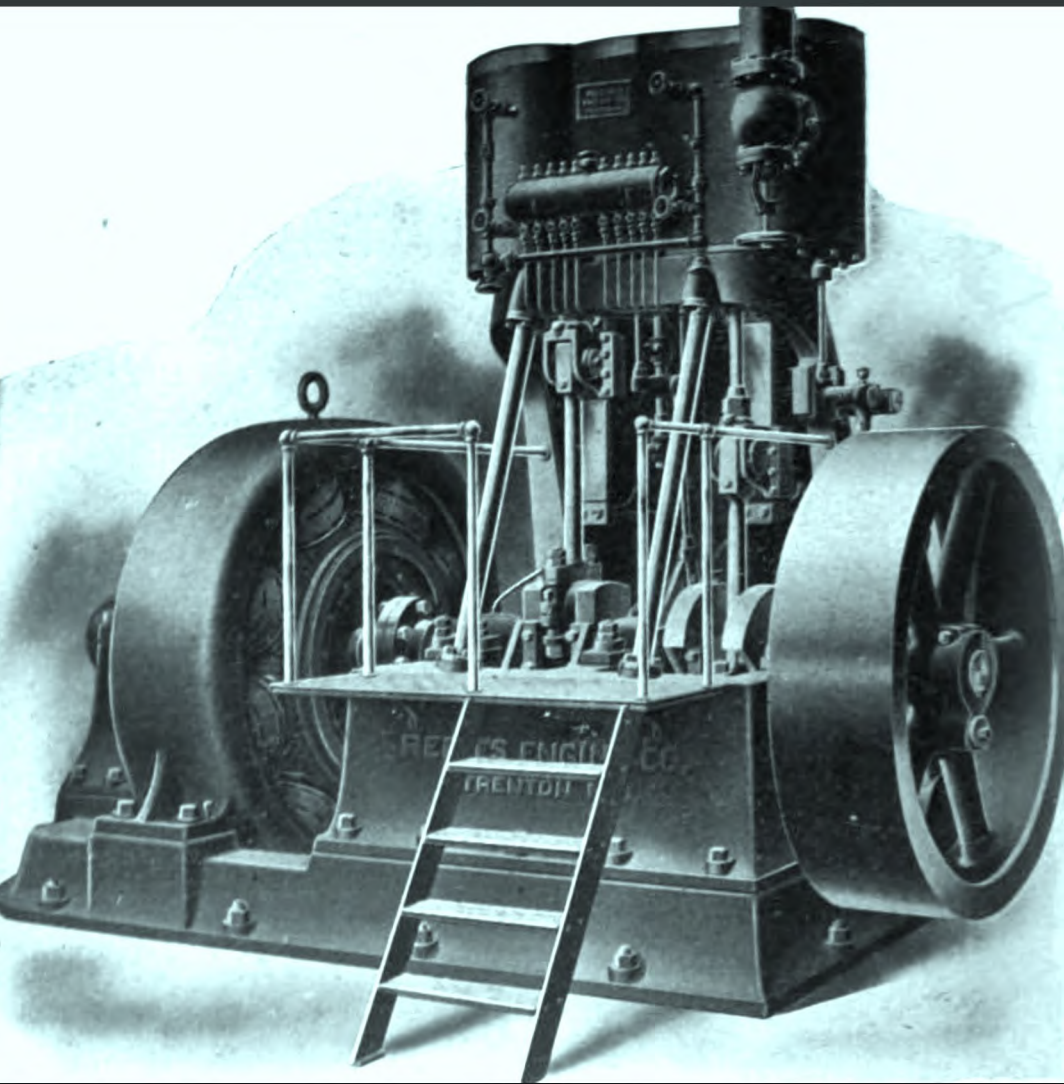

The Steam-engine and Other Steam-motors: Form, ...

Robert Culbertson Hays Heck

Digitized by Google

THE STEAM-ENGINE AND OTHER STEAM-MOTORS

A TEXT-BOOK FOR ENGINEERING COLLEGES AND A TREATISE FOR ENGINEERS

IN TWO VOLUMES

VOLUME TWO

FORM, CONSTRUCTION, AND WORKING OF THE ENGINE; THE STEAM TURBINE

BY

ROBERT C. H. HECK, M.E.

Assistant Professor of Mechanical Engineering
Lehigh University

SECOND ISSUE

NEW YORK
D. VAN NOSTRAND COMPANY
25 PARK PLACE
1913

16

Digitized by Google

THE NEW YORK
PUBLIC LIBRARY
916448A
ASTOR, LENOX AND
TILDEN FOUNDATIONS
R 1937 L

Copyright, 1907
BY
D. VAN NOSTRAND COMPANY

Digitized by Google

PREFACE.

In the effort to attain the objects set forth in the preface to Vol. I., the share of the present volume is chiefly "to give a broad description of constructive practice and to explain fully the working of the machine in its several departments." The steam-turbine is included, but with a much less extensive treatment than is given to the pressure-engine. A proposed chapter on accessories has been replaced by one on steam-engine performance, in which the results from a large number of the best and most reliable tests of engines and turbines are tabulated and discussed. The aim is to cover broadly and thoroughly the engine as a machine and as a member of the power-plant, but not to take up other phases of the subject of power-plant engineering.

The collection of photographic illustrations in the introductory section, largely from builders' catalogues, is intended to give a comprehensive knowledge of the general form of the engine, in a shape always convenient for reference. But in the description of constructive detail line-drawings are used almost exclusively: nearly all of them have been made expressly for this book, thus affording great freedom in the selection of examples, while facilitating adaptation to the space available, and permitting especial emphasis to be laid upon the essential point in the particular connection.

In the illustration of each department—of main engine and of subsidiary mechanism—the idea has been to choose typical examples, which will show various ways of meeting the problem presented. Where there is much complexity, the first case is very fully described; thereafter only the salient features are touched upon. Most of the detail sectional views are cross-hatched for material, according to the conventions in Fig. 199.

Digitized by Google

The chapters on valve-gears and governors treat their subjects from the two view-points of description and of mechanical analysis, combining into one discussion the two parts which for the main engine mechanism are separately set forth in Chapters VII. and VIII. The wide differentiation among designers causes a fairly complete presentation of valve-gears to cover a great deal of space. In the governors, analysis of several actual examples is used to develop the mechanical principles, but no attempt is made to reduce the deeper problems of design to mathematical expression.

FIG. 100. Conventional Cross-hatchings.

The discussion of steam-action in the compound engine at first carries the simple pressure-volume analysis to the limit of utility; then a quantity of practical information is given, in the form of sets of steam diagrams and of realized cylinder-proportions. These diagrams help to illustrate, and have an important bearing upon, the question of economical performance, as considered in the last chapter.

Under the steam-turbine are presented, first, the general form and action of the important types; next, the simplified mechanics of the jet action; third, a discussion of the secondary influences which modify the simple, ideal case; last, a number of examples of constructive detail. As regards the difference in amount of space assigned, the idea has been to give in regard to the engine all the information that the student need seek from a formal treatise, thus far exceeding the bounds of a text intended wholly for class-room use, but to the turbine is given merely a text-book treatment of the fundamentals. This is a new and rapidly developing subject, and the object sought here is to lay a foundation for the wider knowledge to be got from special works.

The last chapter, on thermodynamic performance, is the fruit

Digitized by Google

of a careful selection from the great mass of information along this line contained in the technical literature of the last thirty years. More than two hundred tests are gathered into the principal tables, representing over half as many individual engines and turbines. Comparisons showing the effect of changes in the governing conditions have been warmly welcomed; but series runs, with the load as chief variable, are left for graphical representation, by a number of sets of performance-curves. Besides setting forth the essential observations and results, the tables give the thermal quantities involved, so that all the machines are first brought to a common basis of actual or absolute thermodynamic efficiency, and are then compared with the ideal case of the Rankine Cycle. On account of the great variety in character and fullness of the data, engine-efficiency rather than plant-efficiency has been given and emphasized. Lack of space has excluded many secondary data which would be of considerable interest, but are not of the first importance. The purpose has been to concentrate information which is otherwise widely scattered, presenting the more important facts and relations, and giving to the student and engineer a comprehensive knowledge of what has been done, upon which to base judgment of present performance and expectation for the future.

It has not been thought desirable to burden the text with references showing the source of every illustration. Many drawings have been made from makers' prints and advertising literature; the majority, perhaps, have been redrawn from engineering periodicals, usually with the selection of only the part desired; a few have been copied from other books, notably Leist's *Steuerungen für Dampfmaschinen* and Stodola's *Steam Turbines*, Third Edition (German); while half a dozen line-drawings from catalogues have been transferred directly. As to periodicals, *Engineering*, *Power*, *The American Engineer and Railroad Journal*, and *Marine Engineering* have been freely drawn upon for material.

R. C. H. H.

South Bethlehem, Pa., March, 1907.

Digitized by Google

TABLES IN THE TEXT.

The number denotes the section in which the table occurs.

		PAGE
41 A, B	Data as to Speed of Engines	58
44 A	Steam to Cylinder-ratio	107
64 A, C	Analyses of Governors as to Regulation	380–396
64 A, C	Analyses of Governors as to Adjustment	398–419
68 A	Calculations for Compound-engine Diagram	473
70 A	Cylinder-proportions, Compound Engines	506
70 B	Cylinder-proportions, Multiple-expansion Engines	507
70 C	Cylinder-proportions, Marine Engines	508
74 A	Hallauer's Results on Flow of Steam	564
75 A	Tests of Simple Engines	608
75 B	Compound Engines, High-speed Type	612
75 C	Multiple-expansion Engines, Corliss Type	616
75 D	Pumping and Marine Engines	620
75 E	Tests of Steam Turbines	624
75 F	Engine and Generator Efficiencies	625
75 G	Mechanical Efficiency of Engines	628
77 A, B	Effect upon Engine-performance of Jackets	649
	Effect upon Engine-performance of Superheating	650
78 A, B	Effect upon Turbine-performance of Vacuum	657
	Effect upon Turbine-performance of Superheat	658

General Tables in Appendix, Numbers XI, XII, see page 661.

Digitized by Google

CONTENTS.

CHAPTER VIII.

FORM AND CONSTRUCTION OF THE ENGINE.

PAGE

§ 41. Classification and General Form 1
§ 42. The Framework of the Engine 60
§ 43. The Cylinder 73
§ 44. The Reciprocating Parts of the Engine 112
§ 45. The Rotating Parts of the Engine 154

CHAPTER IX.

VALVE-GEARS AND THEIR ACTION.

§ 46. The Simple Eccentric-driven Valve 175
§ 47. Geometry of the Valve-diagrams: Valve-gear Problems. 188
§ 48. The Shifting Eccentric: Variable Steam Distribution .. 193
§ 49. Secondary Influences and Special Cases 202
§ 50. The Stephenson Link-motion 211
§ 51. Kinematics of the Link-motion 220
§ 52. The Radial Valve-gears 241
§ 53. The Double-valve Gear 249
§ 54. Various Forms of the Slide-valve 259
§ 55. Valve-gear Details 288
§ 56. The Corliss Valve-gear 301
§ 57. Releasing Gears with Gridiron Valves 329
§ 58. Non-harmonic Gears with Variable Eccentric 332
§ 59. Lift-valve Gears 347
§ 60. Valve-gears for Engines which have no Crank-shaft ... 355

Digitized by Google

CHAPTER X.

GOVERNORS OR REGULATORS.

PAGE
§ 61. Types of Rotary Governors 367
§ 62. Special Principles and Methods 372
§ 63. The Problem of Regulation 379
§ 64. The Problem of Adjustment 398
§ 65. Various Special Regulators 421

CHAPTER XI.

STEAM-ACTION IN THE MULTIPLE-EXPANSION ENGINE.

§ 66. Simplest Conditions: the Receiver-pressure Constant.. 438
§ 67. The Direct-expansion Engine 449
§ 68. The Receiver-compound Engine 462
§ 69. Diagrams from Multiple-expansion Engines 476
§ 70. Cylinder-proportions in Practice 504

CHAPTER XII.

THE STEAM-TURBINE.

§ 71. General Form and Action of the Turbine 515
§ 72. Mechanics of the Ideal Steam-action 537
§ 73. Actual Performance of the Steam in the Turbine.... 558
§ 74. Design and Construction of the Turbine. 577
Appendix. The Rotary Engine..... 598

CHAPTER XIII.

STEAM-ENGINE PERFORMANCE.

§ 75. Steam-test Tables 600
§ 76. Observations, Results, and Calculations 629
§ 77. Discussion of Engine Tests 642
§ 78. Discussion of Turbine Tests 653

APPENDIX.

General Tables 661

INDEX.

Digitized by Google

CHAPTER VIII.

FORM AND CONSTRUCTION OF THE ENGINE.

§ 41. Classification and General Form.

(*a*) PRIMARY DIVISIONS INTO CLASSES.—Elaborating somewhat the classification already set forth in § 4, and still looking at the subject from the side of adaptation to different conditions of service, the most obvious and useful division—remembering that no hard and fast lines can be drawn—seems to be as follows:

1. *Stationary Engines for the Generation of Power.* In every case, the engine has a rotary load, or the power is delivered through the shaft. This power may either be transmitted mechanically or be first changed into electric current.

2. *Directly Loaded Stationary Engines.* The working machine, other than an electric generator, is closely and intimately connected with the engine. Power may be delivered through the shaft, as in a mine-hoist or a rolling-mill; or through the piston-rod, as in steam-pumps and air-compressors. For direct connection to the electric generator, so little change from the simple belted arrangement is required that it seems better to include engines for that service under the first heading.

3. *The Locomotive.* With many variations in detail, this conforms closely to one prevailing general type.

4. *Marine Engines.* These, if limited to modern designs for driving screw-propellers, differ little in essential form. Going back to earlier practice, and including the less important class of paddle-wheel steamers, we encounter a wide variety in type, and some very peculiar forms.

5. *Miscellaneous.* A class with this title is needed for the minor special types, for good designs that have been superseded in the

Digitized by Google

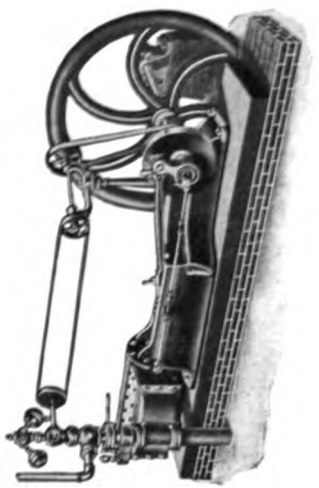

II. 1860–1870.

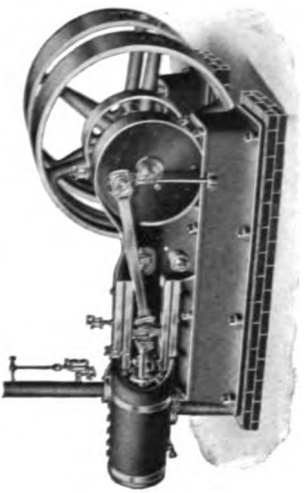

IV. 1884–1900.

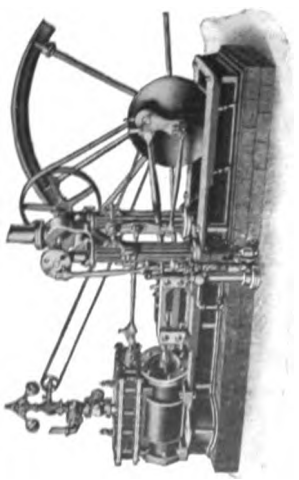

I. 1850–1860.

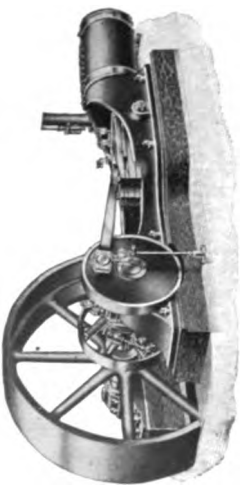

III. 1883–1900.

FIG. 200.—Evolution of the High-speed Engine. Buckeye Engine Company.

Digitized by Google

course of evolution, and for some peculiar designs which just escape being freaks.

It will be noted that only the piston-engine is covered by this classification.

(*b*) STATIONARY ENGINES.—The greater number of the examples here illustrated by photographic views are taken from this widely extensive field. Subclasses which suggest themselves are:

1. *The High-speed Engine*, characterized by high rotative speed, not carried to very large sizes, and especially adapted to running electric generators.

2. *The Corliss Type*, developed as the standard factory engine, and in its smaller sizes used mostly for driving machinery. Many engines besides those following the Corliss design have the same fundamental characteristics.

3. *The Power-house Engine*, for direct connection to large generators. There has been, along parallel lines, an enlarging and speeding up of the Corliss engine, and a development of the high-speed type to large sizes, with the adoption of some ideas from marine practice.

(*c*) EVOLUTION OF THE HIGH-SPEED ENGINE.—This is very well shown by the group of engines in Fig. 200. In I., the form of the bed-plate is the first noticeable feature: it is a plain rectangular cast-iron frame, with the cylinder, the guide-bars, and the main bearing bolted to it. Evidently modelled on the wooden framework which preceded it in the crudest construction, it might, in many designs contemporary with this, have served almost equally well for the bed-plate of a lathe.

In this engine, the cylinder has brackets cast on the sides of it, which rest upon the bed-plate: and the steam-forces are resisted, if moderate by the friction due to the grip of the bolts, if severe by shearing stress in the bolts. Except in the locomotive, an end-connection between cylinder and frame is now used; it is more directly in the line of force and is easier to fit truly; while simple tension in the bolts is decidedly preferable to pin-action.

At II. we see a long step forward in the direction of adapting the engine-bed to the particular functions which it has to perform—namely, to carrying the cylinder, the cross-head guides, and the

Digitized by Google

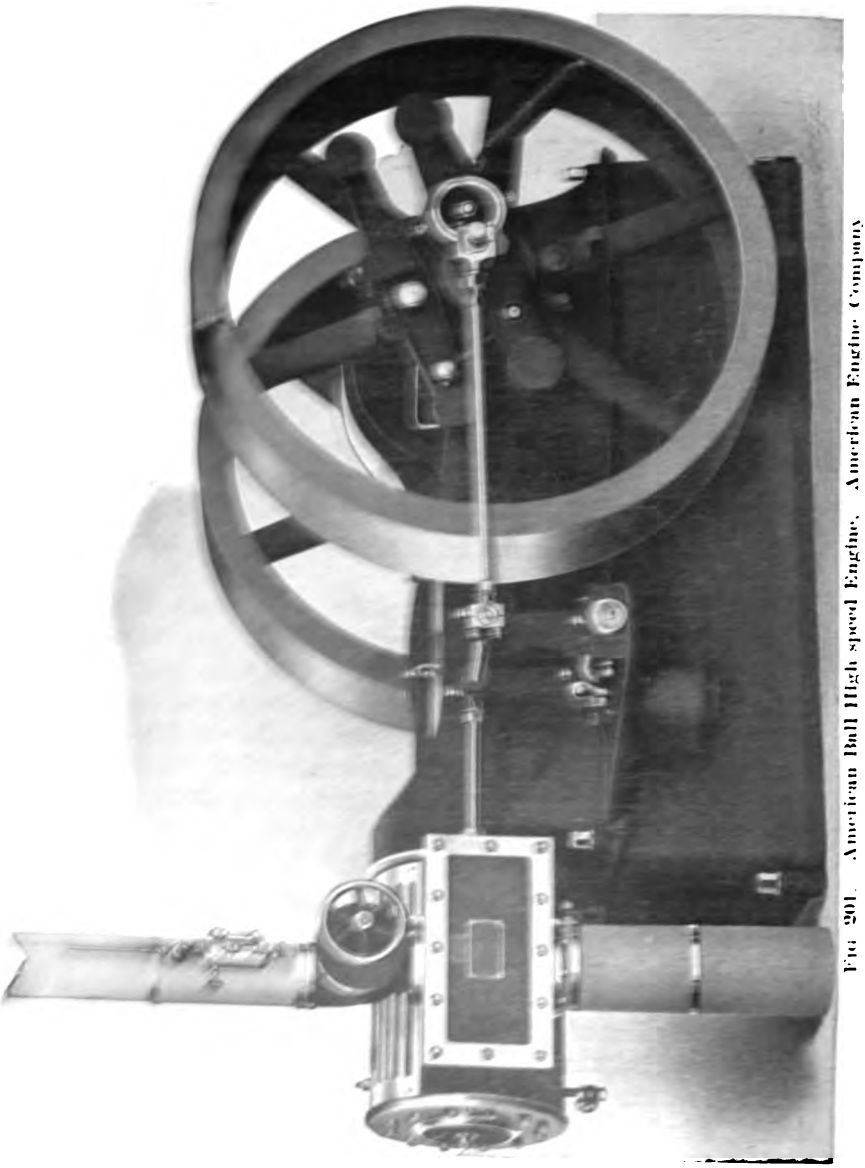

Fig 201. American Ball High speed Engine. American Engine Company

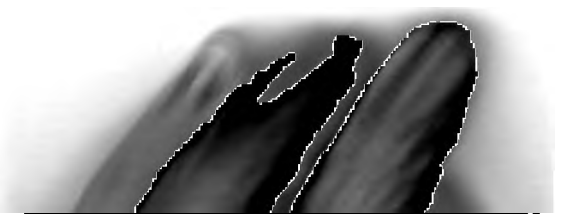

Digitized by Google

shaft-bearing, and to resisting the working-forces in the machine. But the engine still has the plain slide-valve, and is governed by throttling the steam. Note that in both II. and I. the valve is driven by a return-crank, from the main crank-pin, instead of by the more usual eccentric on the shaft, behind the main bearing.

The engines at III. and IV. show fully developed types: III. has what is known as the Tangye bed, from the builders, an English firm, who introduced it. Near to the cylinder, the bed is given a cylindrical form; then it is cut away by a curved intersecting surface, so as to sweep down in graceful lines on each side of the guide-bars. IV. differs from III. chiefly in the form of the bed at the guides; in effect this is a part of the Tangye bed turned on its side, and a different type of cross-head becomes necessary. In both cases, the main bearing is, of course, a part of the frame-casting.

(*d*) Engines with the Tangye Bed.—One good example of this style of design has been fully illustrated in Figs. 2 to 7; another is given in Fig. 201, and is further shown in detail by Figs. 237 and 251. In both engines, the sides of the bed are kept well above the horizontal plane through the cylinder-axis, so as to have a good part of the metal in the line of the principal working-forces. The moving parts are covered in by suitable oil-guards, to prevent the throwing of oil. In the Ames engine, Figs. 2 and 5, the method of lubrication by separate oil-cups is used. On the engine in Fig. 201 there is an oil-pump, driven by the rocker-arm and partly appearing in the photograph; from this pump, pipes run to all the bearings, with a sight-feed drip, adjustable as to rate of flow, at each one. On Fig. 202 is seen the gravity system, consisting of a central reservoir and pipes to all the bearings, with the sight-drips right under the oil-tank where they can be most easily watched.

In viewing this vertical compound engine, Fig. 202, we are now concerned chiefly with the general, external form, leaving mechanical detail and steam-action to be taken up later. Beginning at the bottom of the framework, the first part is the sub-base, which carries both engine and dynamo: then, for the engine proper, we have the bed-plate with the bearings, the cast-iron upright or housing at the back, and the steel braces or stanchions in front. The

Digitized by Google

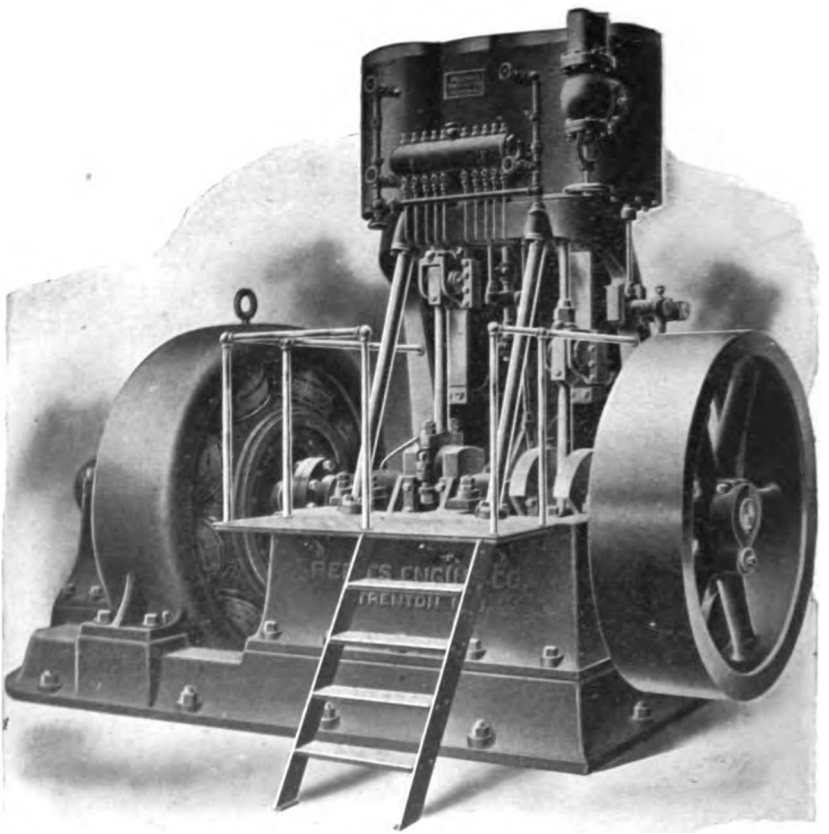

FIG. 202.—The Reeves Vertical Compound Engine.

Digitized by Google

Fig. 203.—Heavy-duty High-speed Buckeye Engine.

Digitized by Google

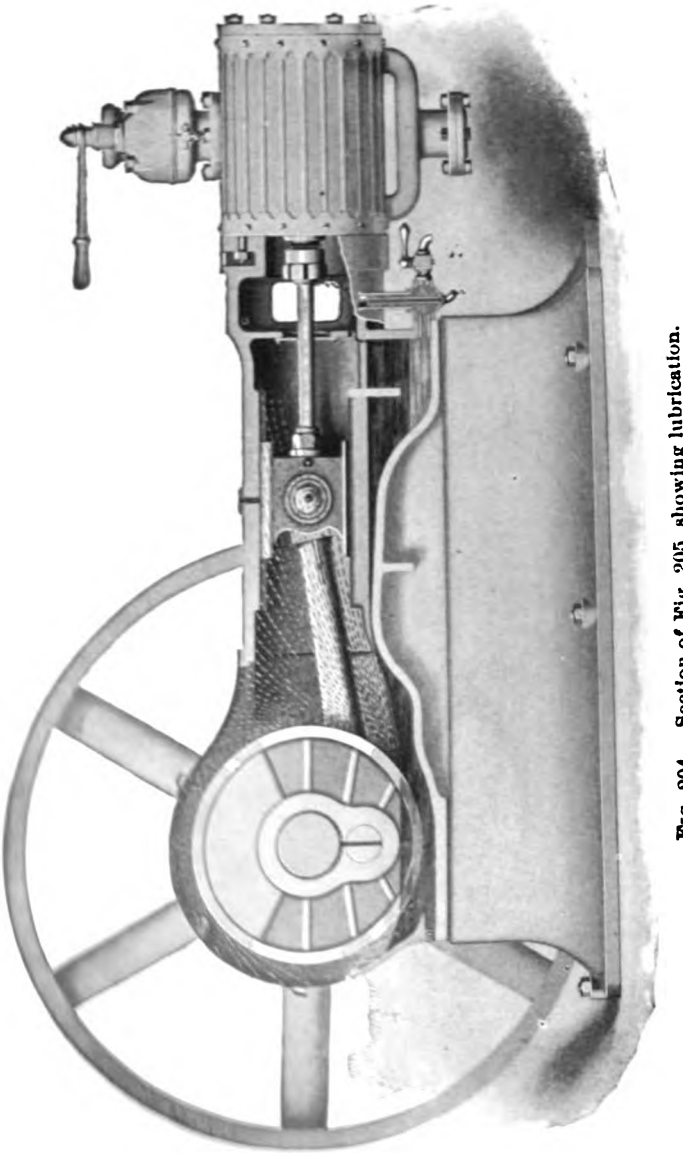

FIG. 204.—Section of Fig. 205, showing lubrication.

Digitized by Google

frame follows closely the Tangye outline near the cylinder; but at the shaft-bearings there must be a radical difference in form between vertical and horizontal engines. Like most stationary vertical engines, this differs from the marine type in that the frame is complete in itself, with a full seating upon which the cylinder rests: whereas in marine engines the cylinder is a part of the frame, the

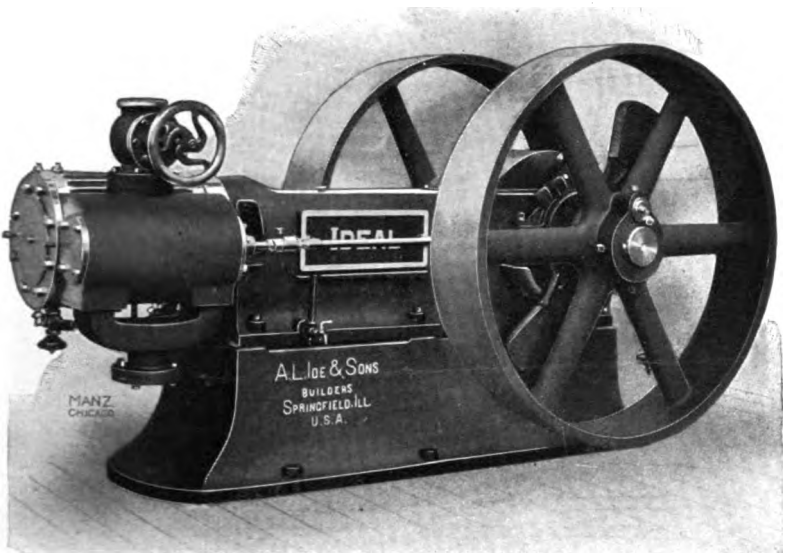

FIG. 205.—An Enclosed Center-crank Engine.

front and the back housings or columns being bolted to it, and not usually otherwise connected to each other at the top. This compound engine is of the direct-expansion type (see § 22 (c)), having its cranks opposite. When ready for running, the working-parts are fully enclosed by oil-guards of sheet-metal.

(e) ENGINES WITH ENCLOSED GUIDES.—Another typical form of engine-frame is shown in Fig. 203. Here the guiding-surfaces for the cross-head are parts of a cylindrical surface, so that they

Digitized by Google

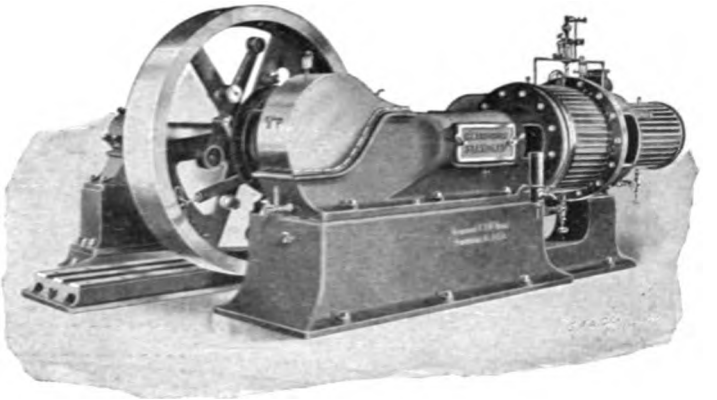

I. Front View.

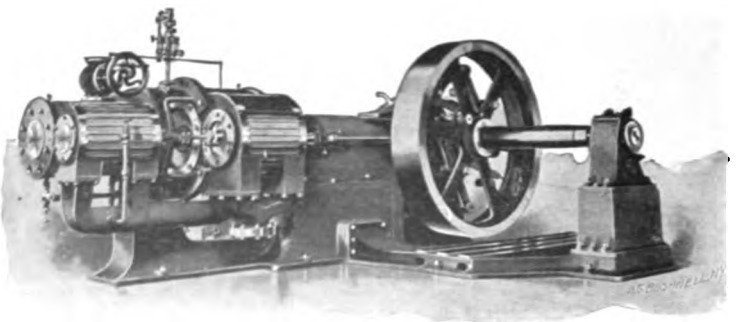

II. Rear View.

FIG. 206.—Tandem-compound Engine, Harrisburg Foundry and Machine Works.

Digitized by Google

can be bored out when the cylinder-seating is faced, thus insuring true alignment. This gives the frame a cylindrical form at the guides, and the latter are completely enclosed, except where openings are made at the sides for access to the moving parts. From one side of the guide-barrel, the frame is carried forward to the main bearing; and its outline, viewed from above, suggests the name "bayonet-frame" sometimes given to the type—more especially when it is used for long-stroke engines, not so compact as this one. In front of the guides and around the crank-disk is formed a casing of sheet-metal to catch oil, this engine having a gravity oil-system, but with the central oil-tank usually placed in some less conspicuous position than just above the engine. The sub-base is of concrete, rising from the main foundation: and the support under the cylinder is a rather unusual feature in a simple high-speed engine.

In Fig. 205 is shown an engine in which the idea of completely enclosing the moving parts is very fully carried out. The frame is box-shaped at the guides, then widens and forks to the bearings, with a separate crank-case tightly covering the crank-disks. The builders of this engine were the pioneers in the use of splash-lubrication, illustrated by Fig. 204, and now used in many other designs. Oil from the reservoir under the crank is continually thrown about the enclosed space: the guides are lubricated directly and very copiously; for the shaft-bearings, oil is caught in narrow troughs on the sides of the crank-case, from which it flows in steady streams; escaping from the inner ends of the bearings, the oil gets into recesses formed around the shaft on the outer faces of the disks, and is carried by centrifugal force to the surface of the crank-pin, through diagonal holes drilled as shown by the dotted lines on Fig. 5; oil for the wrist-pin is caught in grooves on the top of the cross-head—though in some recent designs a more positive feed is secured by putting the wrist-pin on the same system that supplies the main bearings. By this method a rapid circulation of oil is secured, with full supply to all the bearings, and with a minimum amount of attention.

Fig. 206 shows two views of another design where the same lines of construction and operation are followed, but in a side-crank

Digitized by Google

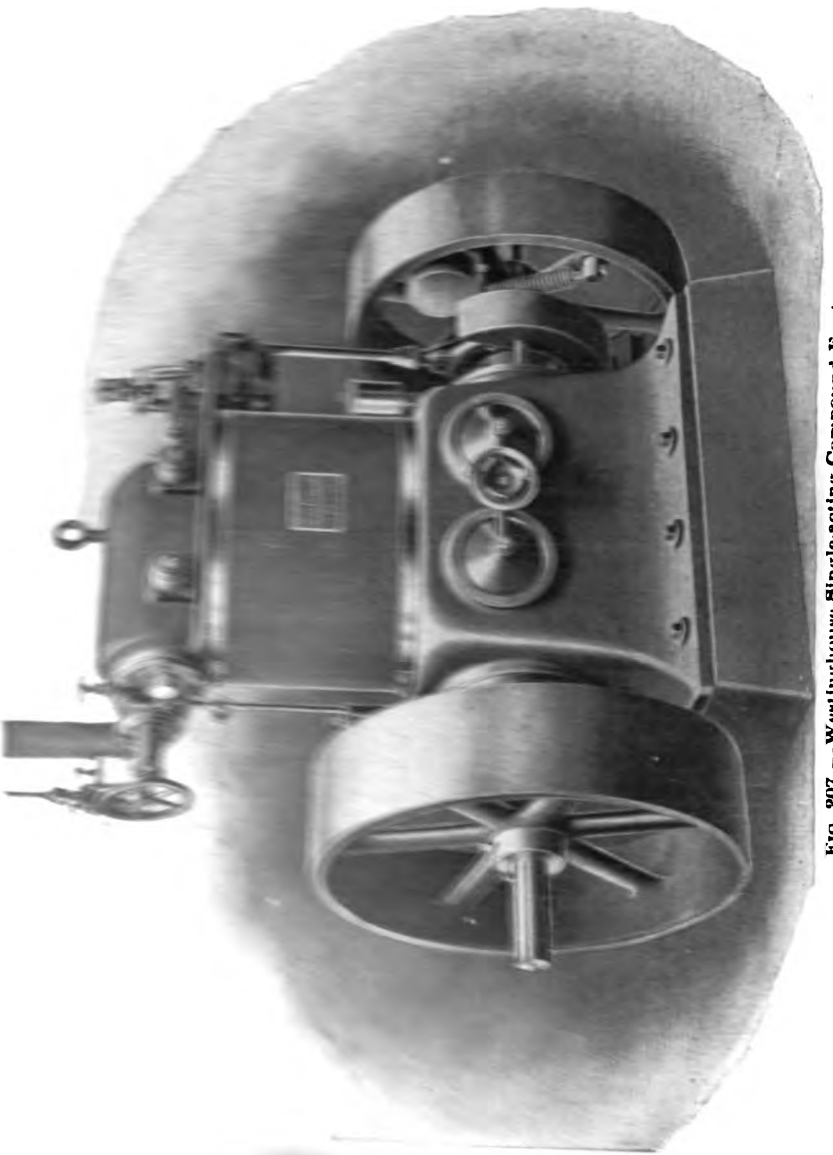

FIG. 207.—Westinghouse Single-acting Compound Engine.

Digitized by Google

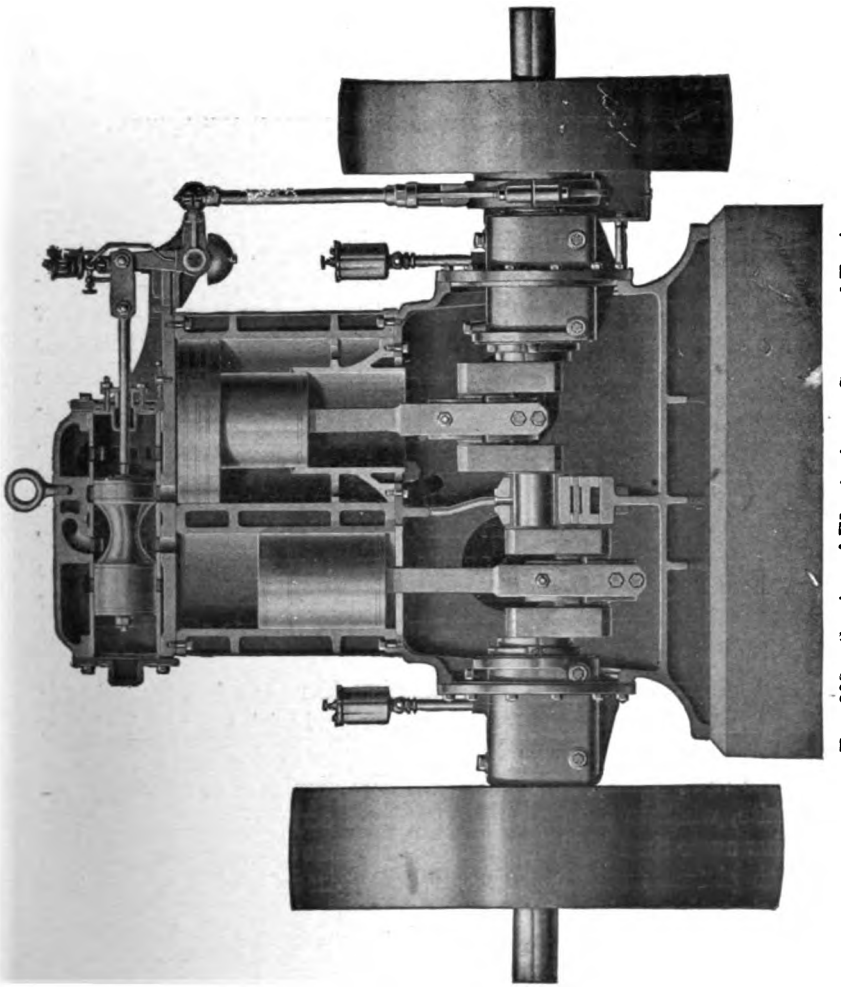

FIG. 208. – Section of Westinghouse Compound Engine.

Digitized by Google

arrangement. For this make of engine a tandem compound is chosen as representative, differing from the simple engine only at the cylinders. Under these, of course, a support is necessary; and it is placed beneath the connecting-piece which joins them. Other features to be noted at this point are, the construction of the crank-case, of sheet-metal, the steam-piping between the cylinders, the use of piston-valves (as also in Fig. 205), and the form of the base for the generator.

f THE WESTINGHOUSE SINGLE-ACTING ENCLOSED ENGINE, illustrated in Figs. 207 and 208, and in Fig. 255, has a number of features in which it differs from the conventional type. Most striking is the trunk piston, which also serves as cross-head, in a manner more clearly shown by Fig. 255. In the simple engine of this type there are two pistons of equal size; here the low-pressure piston is made with two diameters, in order that there shall not be a variation in the volume of the enclosed space about the working parts. The trunk piston can, of course, receive steam-pressure at one side only, although engines have been built—in early marine practice—with a double-acting piston like that in the low-pressure cylinder of this engine. Here the annular space around the low-pressure trunk forms a cushion-chamber, in which a confined body of air alternately expands and is compressed, with some effect upon the force-action in the machine.

This form of the engine-mechanism has the advantage that it shortens up the machine considerably: and with the trunk piston, as with the outside-packed plunger in a pump, leakage is bound to make itself immediately evident. The cranks are necessarily opposite, whether the engine is simple or compound; for with any other angle than 180°, there would be a time in the revolution when both pistons would be rising or both descending; and this, in a single-acting engine, would be worse than a dead-center. In regard to work-performance, the two pistons of this engine are equivalent to the single piston of the double-acting engine.

Referring to § 40 (*i*), we see that this machine is practically self-balanced against direct shaking-force; and with the cylinders so close together there can be only a small twisting shake, so that counterweights on the cranks are not needed.

Digitized by Google

The crank-chamber is filled with water to a height such that the crank-pin is about half immersed when in its lowest position, and on this water floats a half-inch layer of thick black oil. When the engine is running, an emulsion of oil and water is continually churned and splashed about, so as to lubricate thoroughly the pins and the piston-slide.

(*g*) CHARACTERISTICS OF THE HIGH-SPEED TYPE.—With the preceding example in view, the cogency of the following statements can be fully appreciated:

The high-speed engine has a short stroke relative to the diameter of its cylinder, which determines that the whole machine shall be short and compact. The framework is usually a single casting, of rather complicated form; and the machine in general is very much of the "self-contained" type.

With the short stroke goes a high rotative speed, or a high frequency of stroke, in order that a good mean speed of the piston may be maintained. The latter, usually expressed in feet travelled per minute, is a primary factor in the piston-displacement, upon which depends the power developed by the engine. While in no sense a drawback when the engine is to be used for such work as driving shafting, this high speed of rotation adapts it especially to the direct driving of electric generators of moderate diameter. A discussion of engine-speed will be found in Art. (*u*).

All the engines thus far shown have slide-valves, of either the flat or the piston form; and these are driven and controlled by shaft-governors, which regulate the steam-distribution so as to accommodate the power of the engine to its load. In every case, the valve remains always under the control of the eccentric, or the valve-gear is positive: except as they act upon the governor so as to change the position of the center of the eccentric, the forces in the valve-gear do not affect the movement of the valve, unless they be strong enough to cause elastic change of shape or other disturbance in the parts of the mechanism.

To recapitulate, the high-speed engine is characterized by a short stroke and compact construction, by high rotative speed, and by a positive valve-gear, usually with automatic regulation.

The older and cruder type of engine with fixed eccentric and

Digitized by Google

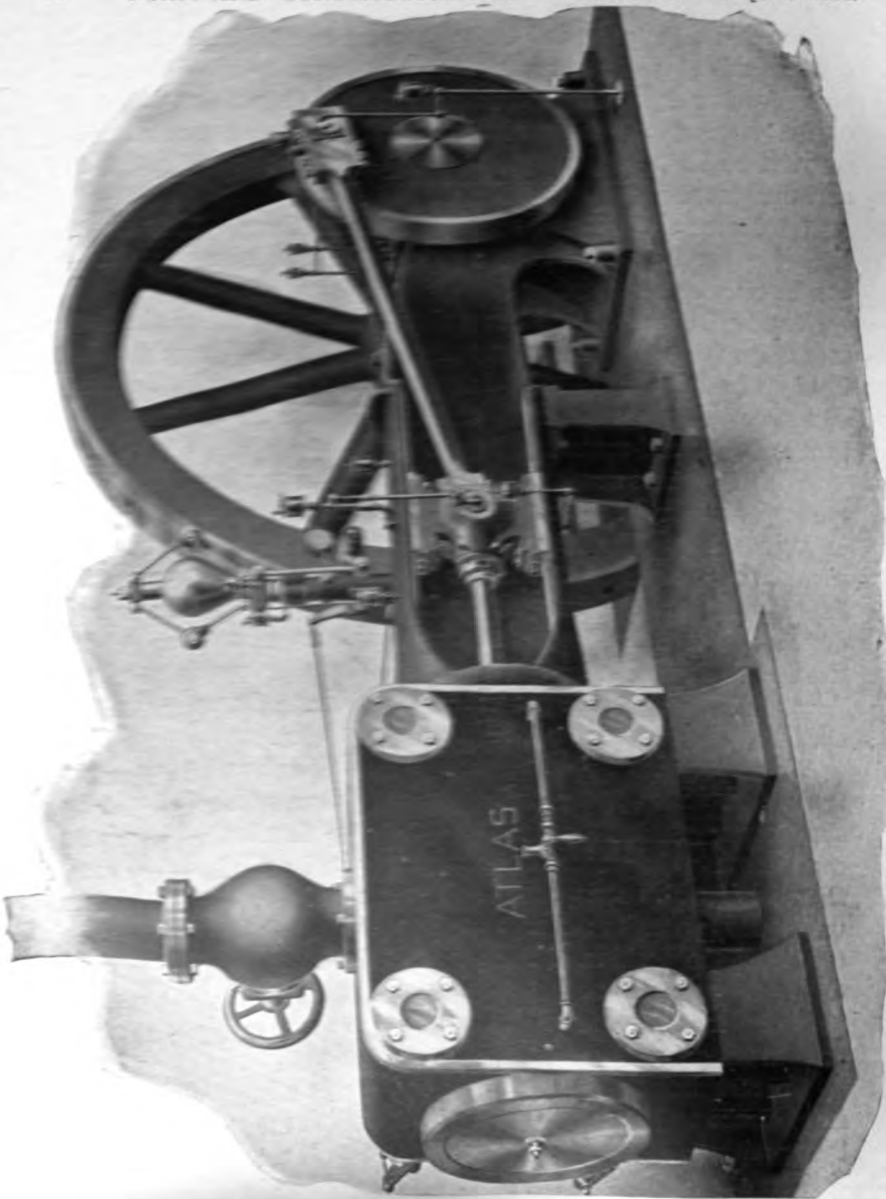

Digitized by Google

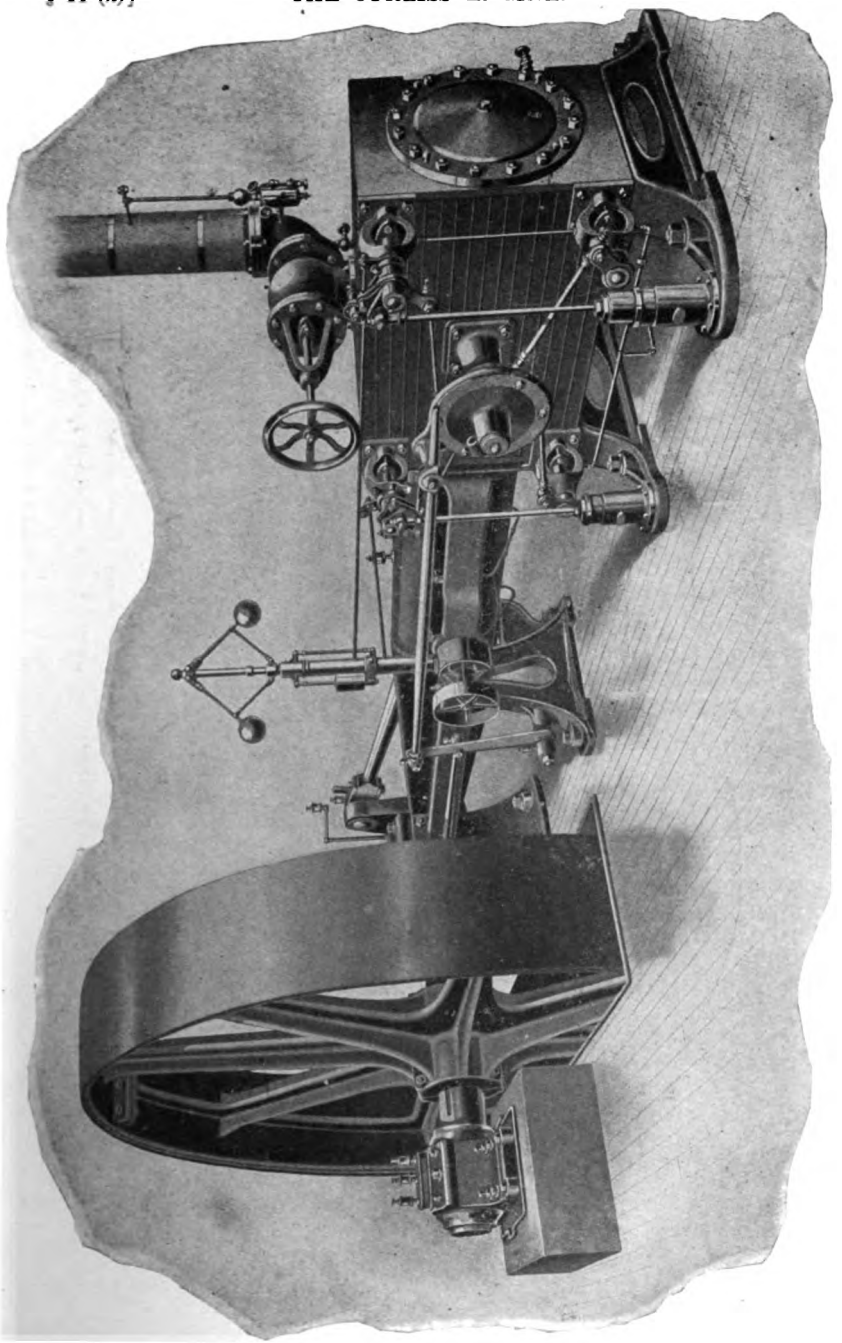

FIG. 210.—Fishkill-Corliss Engine with Girder Frame. Fishkill Landing Machine Company.

Digitized by Google

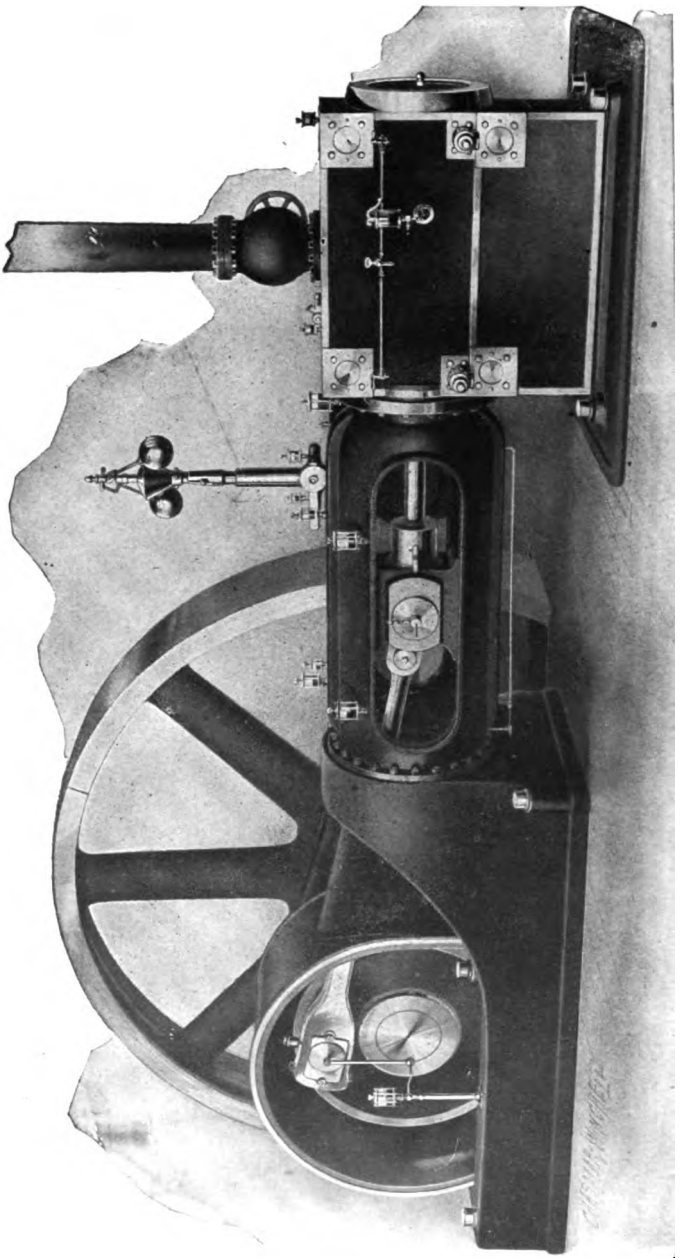

Digitized by Google

throttling governor would generally fall into the class under discussion, from the points of view of form and valve-gear, if not always of running speed.

To present the exception which every rule requires, it may be remarked that one of the pioneer designs of the fast-running engine, the Porter-Allen, has cylinder proportions similar to those found in engines of the Corliss type; that is, the stroke bears a high ratio to the diameter.

(*h*) Simple Corliss Engines.—In Figs. 209 to 213 is given a series of examples of Corliss engines, showing the important variations in form. As to the cylinder, of which sections will be found in Figs. 261, 268, etc., it has usually a rectangular external shape, when the lagging or covering is in place. It is strongly supported by the foundation, resting upon two feet at the ends as in Figs. 209 and 210, or upon a spreading base-plate as in Fig. 213, or with everything inside the sheathing as in Figs. 211 and 212. There are separate valves, of the oscillating plug type, at the four "corners" of the cylinder, those at the top for admission, the others for exhaust; with a rather complex-looking valve-gear at the back to operate them.

Of this valve-gear the "releasing" action is an essential feature. The steam-valves are under the control of the eccentric during only a small part of the revolution, while they are being opened; at a point determined by the governor, the valve is released or unhooked; and is then promptly closed by the vacuum-cylinder or dash-pot, remaining at rest until the time for a new admission.

These engines are run at moderate speeds—in the great majority of cases from 80 to 100 R.P.M.—and therefore have a long stroke, which lengthens out the whole machine. The girder-frame, shown in Figs. 209 and 210, has long been the standard form for Corliss engines: its general shape is clear from the illustrations, Fig. 210 showing the flanged stiffening-rib formed on the back of the casting. In this example, representing the older type of design, girder-frame and main-bearing pedestal are separate pieces, bolted together; in the heavier construction of Fig. 209, they are cast in one piece.

For heavy duty—that is, for higher speed and higher steam-pressure, with heavier construction—most builders change to the

Digitized by Google

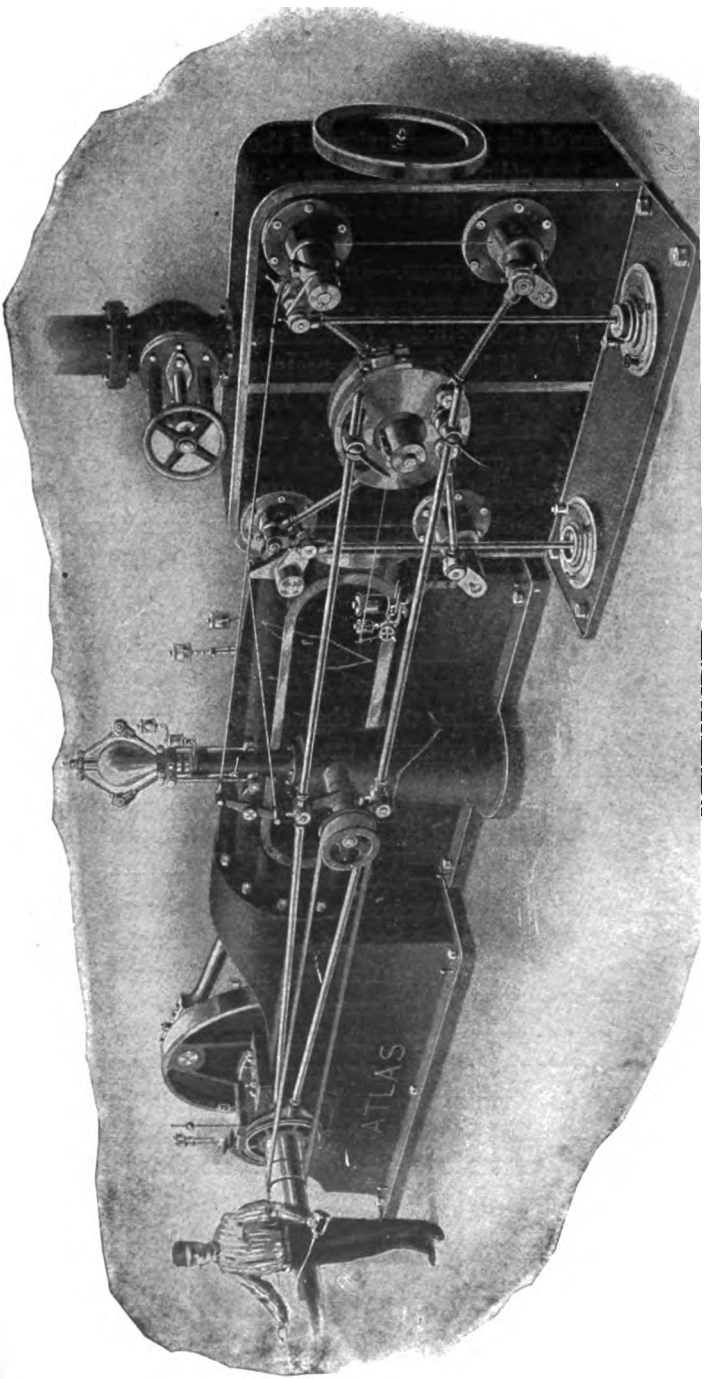

Digitized by Google

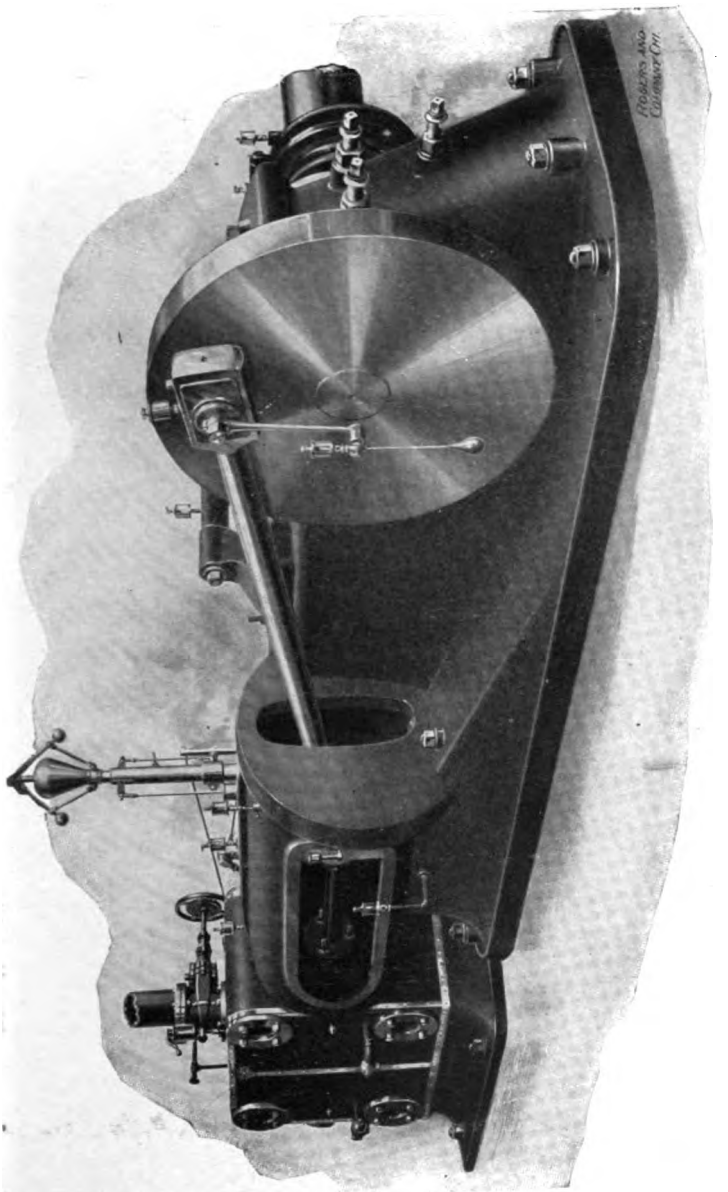

FIG. 213.—"Rolling-mill" Type of Corliss Engine. Murray Iron Works.

Digitized by Google

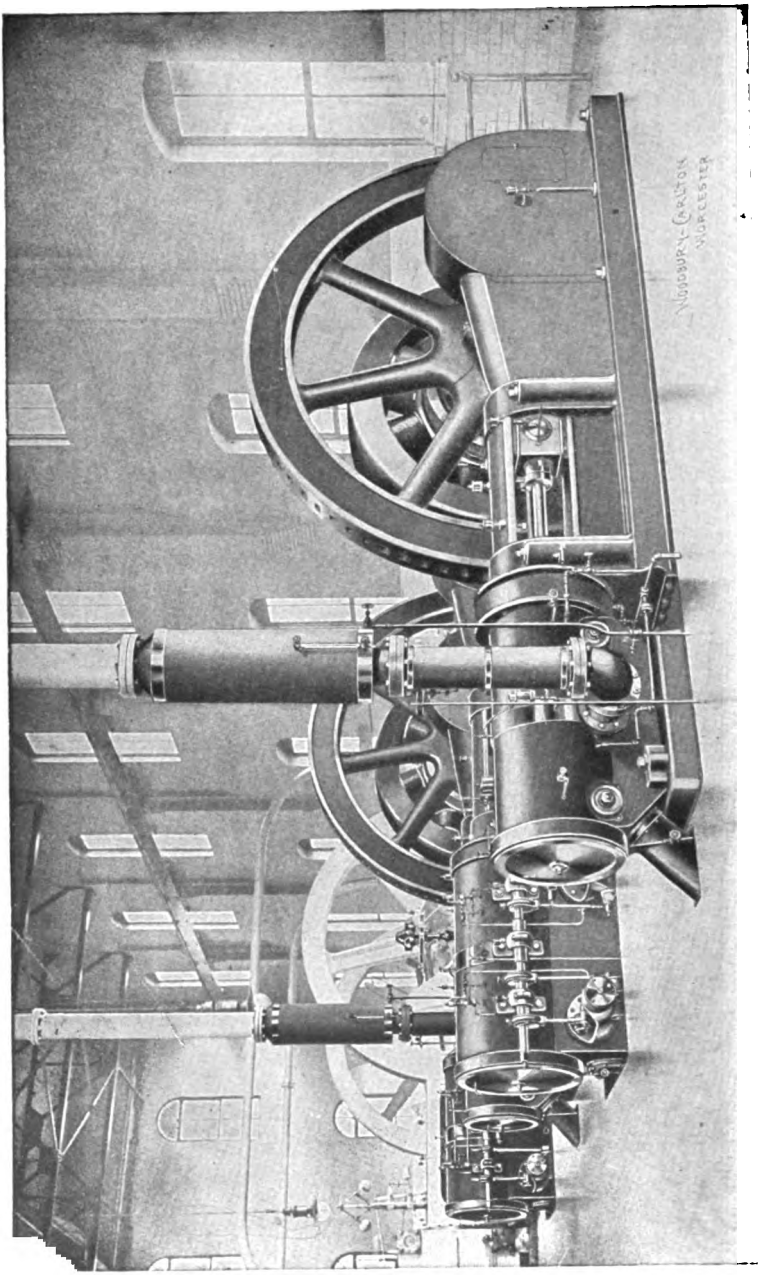

Digitized by Google

form of frame shown in Figs. 211 and 212. The guides are cylindrical, the guide-barrel forming a separate piece; this is usually supported like a bridge, between the cylinder and the main frame, as in Fig. 211, but sometimes has its own base extending to the foundation, as in Fig. 212. In any case, the main frame is of the Tangye form, with broad base, surrounding the "crank-pit." It will be noted that the Cooper engine is provided with an oil-guard very similar to that on Fig. 203.

Fig. 213 is representative of the most recent heavy-duty designs, the frame being all in one piece, and having a spreading base to rest upon the foundation. With stiffening by judiciously placed internal ribs, this makes a very strong and rigid casting, and a frame which will not deflect under any force that can properly come upon it. This self-contained type of construction facilitates the securing and the maintaining of the perfect alignment which is essential to smooth and easy running.

(*i*) THE CORLISS TYPE.—The characteristics of this type of engine are, a long stroke, low speed of reciprocation, a drawn-out and open form, separate valves, and a releasing valve-gear. As already stated, engines of other designs also have these same features; but it seems fair to take the most prominent member of the class, the Corliss, as the type of all.

Next in importance is the Wheelock Engine, of which an example is given in Fig. 214. There are still four valves, but the two for each end of the cylinder are grouped together and placed at the bottom. This leads to a cylinder quite different in external appearance from that of a Corliss engine. The valve-gear too is radically different in form (though not in effect), consisting of a side-shaft along the back of the engine, which turns with the main shaft and carries an eccentric for each valve. The form and arrangement of the valves can be seen in Fig. 266; they are of the gridiron type, with flat face and a short reciprocating movement. A description of the valve-gear will be found in the next chapter.

Very common in Europe, though rare in American practice, is the engine with lift- or poppet-valves—or, as they are called when the valve-gear is of the releasing type, drop-valves. The cylinder

Digitized by Google

of one of these engines is quite fully illustrated in Fig. 267; the valves are located as in a Corliss engine, and the primary part of the valve-gear is like that of the Wheelock engine, in that there is a light shaft along the back of the engine, driven from the main shaft by mitre-gears, and carrying an eccentric for each valve. The valve-gear proper, at the cylinder, is illustrated in § 59.

(*j*) COMPOSITE TYPES.—This title seems best to cover the class of engines represented by Fig. 215. This has Corliss valves and the peculiar valve-movement of the Corliss gear, but the releasing

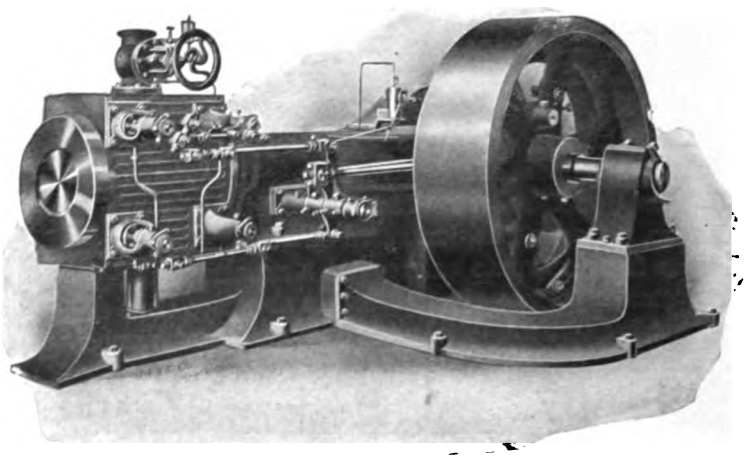

FIG. 215.—Fleming Four-valve Engine. Harrisburg F. & M Co.

feature is omitted: instead, the eccentric-center is shifted by a shaft-governor, as in the ordinary high-speed type—and these engines are intended to run at high speeds. Distinctions thus based upon the form and action of the valve-gear can be much better understood after a perusal of the next chapter; but it will not be amiss to remark here that an essential feature of the Corliss valve-gear is a marked distortion of the movement of the valve from the simple harmonic motion that is produced by the eccentric; and this effect is now introduced into a number of positive valve-gears, the engines shown in Figs. 216 and 218 being further examples.

Digitized by Google

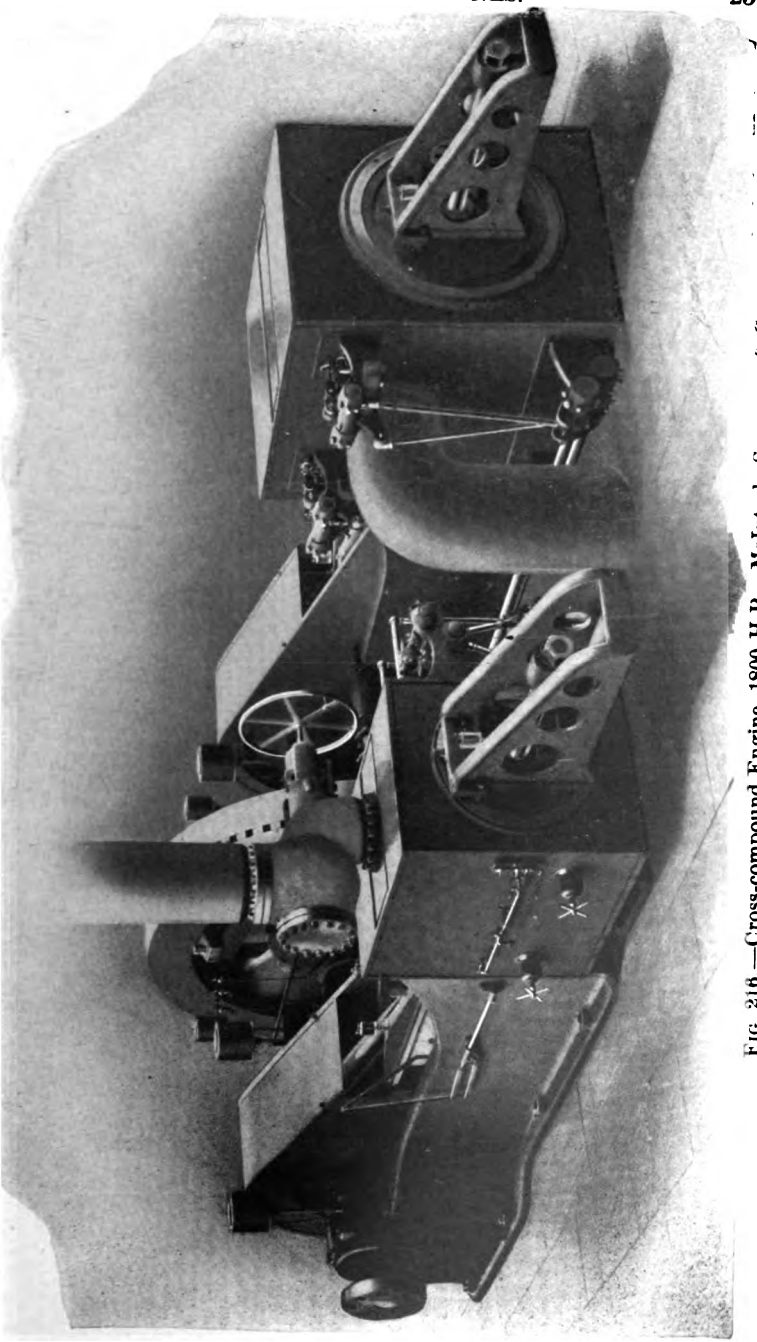

FIG. 216.—Cross-compound Engine, 1800 H.P. McIntosh, Seymour, & Co.

Digitized by Google

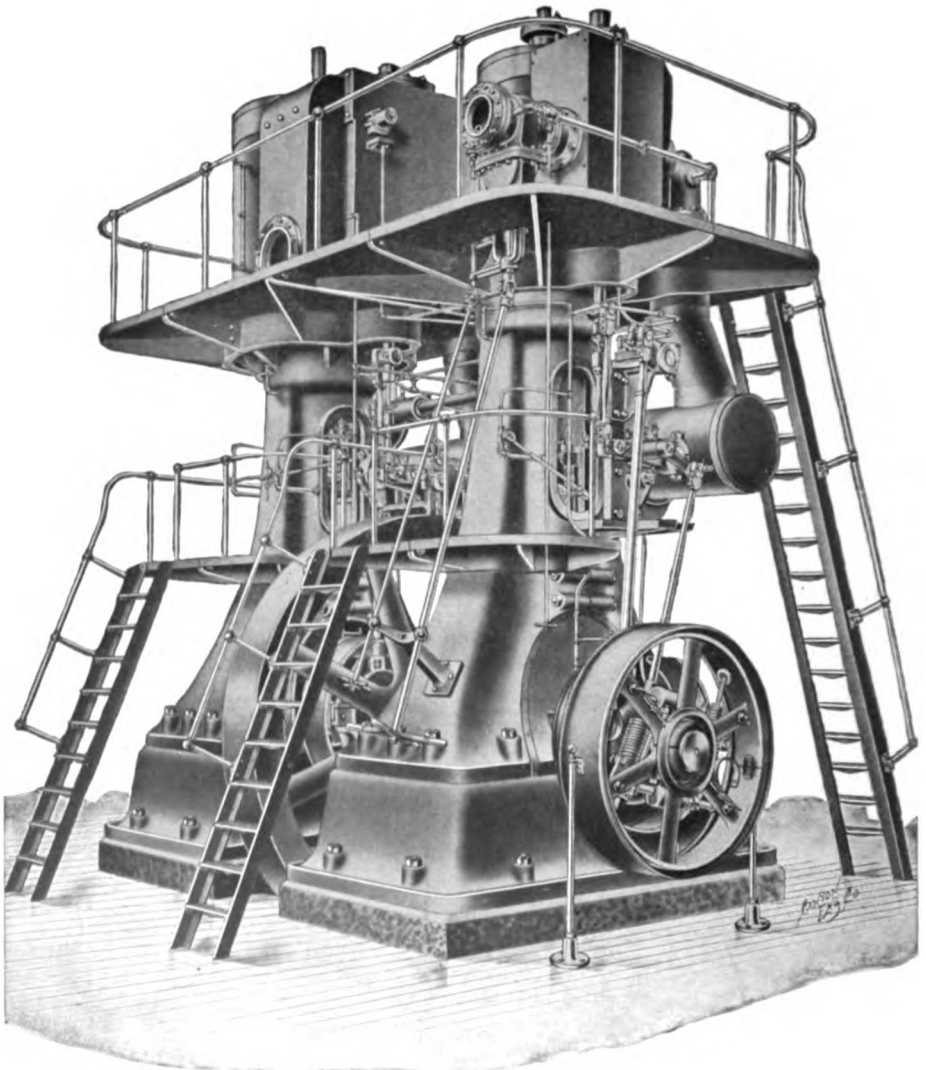

Fig. 217. - Vertical Cross-compound Buckeye Engine.

Digitized by Google

(*k*) LARGE STATIONARY ENGINES, especially for power-house service, are well represented by Figs. 216 to 219. The first example shows the horizontal, cross-compound type, which has its cylinders side by side and the cranks at right-angles. Structurally, an engine of the type here shown usually consists of two self-contained machines, resting on the same foundation, and joined mechanically by the shaft. These elements may form the two parts of a compound engine, as in this case: or each may be a complete tandem-compound engine, making four cylinders in all: or, with more complex steam connections and a proper gradation in diameter of cylinders, the engine may be triple- or quadruple-expansion. To get four cylinders in a triple engine, two equal low-pressure cylinders are used, one on each side. Small horizontal, high-speed, cross-compound engines have usually the compact construction typified by Fig. 202.

In Fig. 216, the engine has an inside crank on the high-pressure side, with a coupling on the outer end of the shaft, for connection to a line-shaft or a generator: but usually, in direct-connected units, the generator is put on the middle part of the shaft, beside the fly-wheel, as in the vertical engine shown at Fig. 218. This engine has a positive valve-gear of special form—see § 58—with the cut-off controlled by a shaft-governor. The majority of large power-plant engines are, however, of the Corliss type.

High-grade vertical engines are shown in Figs. 217 and 218. As to the form and arrangement of the cylinders, nothing need be said, except to call attention to the steam-connections: in both cases, the receiver is a long cylinder back of the frame, large enough to contain a re-heating steam-coil. The frames are simple housings of graceful outline, made in two or more pieces, and completely enclosing the working parts. The bed-plates are necessarily independent of each other, to leave room for the wheel, and usually for the generator, between them. The idea of a combination of mechanically complete elements, united into one structure chiefly by the foundation, is strongly exemplified in the general arrangement of both these engines—in which they differ markedly from the compact and self-united marine engine, as illustrated in Figs. 232 to 235, which has not a heavy and rigid foundation whereon to rest.

Digitized by Google

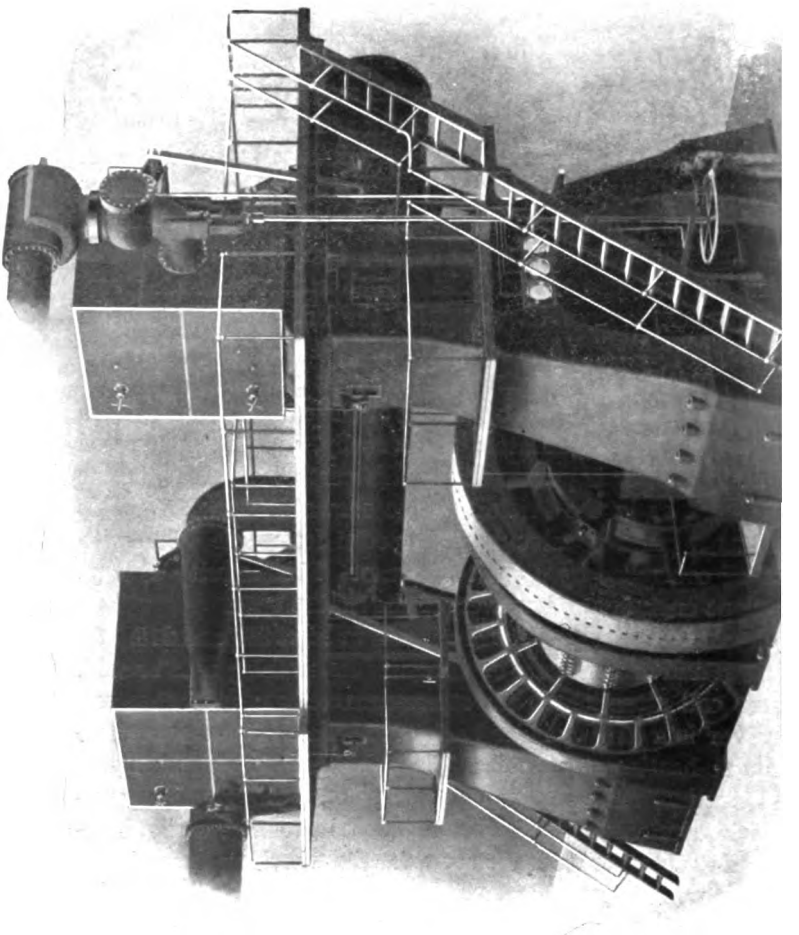

Digitized by Google

Fig. 217 is shown as an engine alone, without its load. It could drive two generators, one coupled to each end of the shaft; or, by separating the halves, room can be made for a larger generator in the middle. It must be understood that when engines get above a certain limit of size, say from 600 to 800 H.P., there is not the same standardization in designs that is usual in the smaller sizes:

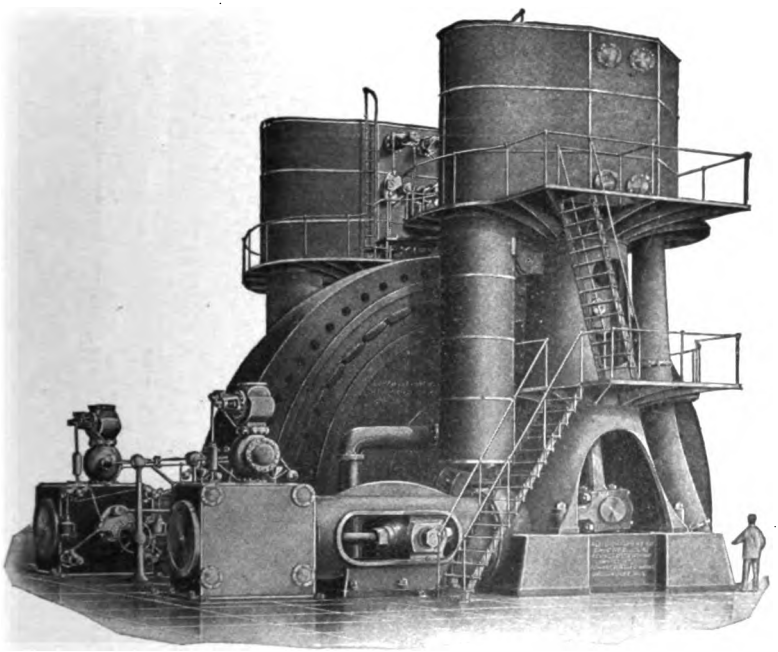

Fig. 219.—Reynolds Horizontal-Vertical Duplex Compound Engine, "Manhattan Type." Allis-Chalmers Company. Cylinders 44″ and 88″ by 60″; R P.M. 75; 8000 H.P.

it is necessary rather to modify and adapt general designs to particular conditions, though with the least possible variation in the detail of the parts.

A special design for large generator units, which is coming into increasing prominence, is shown in Fig. 219. It is a duplex compound engine, each half the combination of a horizontal high-

Digitized by Google

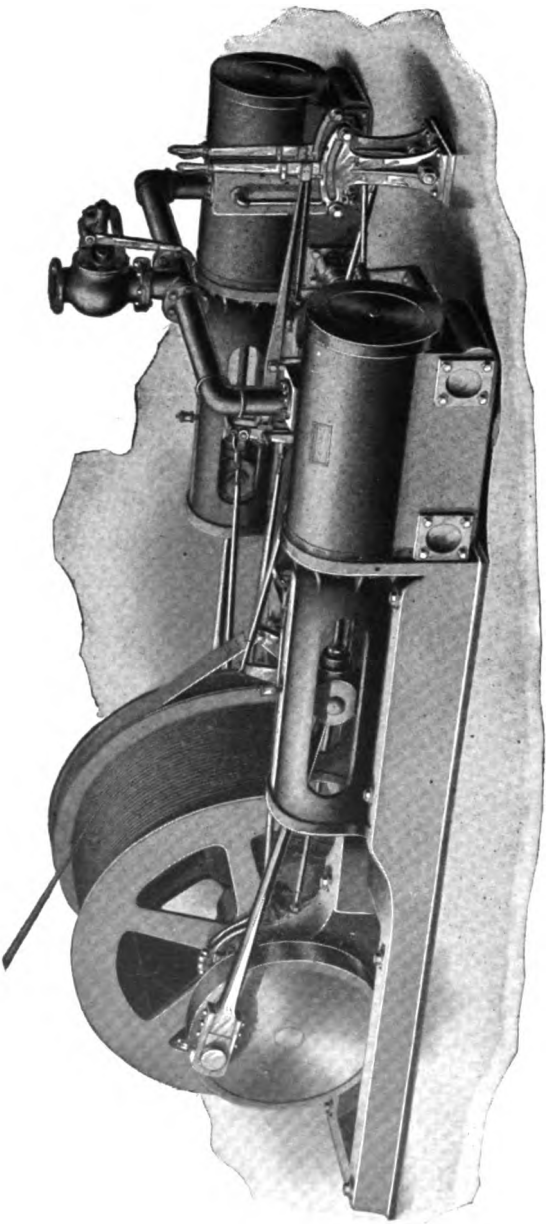

Fig. 220.—Single-drum Direct acting Hoisting-engine. Allis-Chalmers Company.

Digitized by Google

pressure engine with a vertical low-pressure, with the two connecting-rods working on one crank: by setting the two cranks at an angle of 135°, a very uniform turning-moment is secured; and the rotor of the generator, here the field, is the only fly-wheel required. The horizontal frame is like that in Fig. 212; the vertical housing is best described, perhaps, by naming it the "tree-trunk" type. Details of the low-pressure cylinder, with the valves in the heads, are given in Fig. 268. The re-heating receiver, above the horizontal engine, and the large exhaust-pipe beyond the housing, fill out the lines of the vertical engine.

(*l*) Hoisting and Rolling-mill Engines.—Coming now to the arrangements in which the engine is directly connected to the working machine, we have first the two cases of a rotary load exemplified in Figs. 220 and 221, both engines being of the duplex-simple, reversing type. Small hoisting-engines are usually of the semi-portable form, mounted on a bed-plate with a vertical boiler. Fig. 220 shows a very simple form of the large mine-hoist, the designing of which is always a special problem for the engineer; the complete apparatus for this service showing a wide variety in form and arrangement. In some cases, with deep shafts and almost continuous operation of the hoist, and where fuel is expensive, compound engines are used: but where there are frequent stops and starts, with periods of rest, the economy of the compound has no chance to develop itself and overbalance the mechanical disadvantage of sluggishness in responding to the throttle-valve. The engine here illustrated is called direct-acting because the drum is placed directly on the engine-shaft, without gearing. The valves are of modified Corliss form, positively driven by a link-motion valve-gear. The engine is hand-controlled: one of the levers shown is for reversing, the other for working the brake; and the throttle-valve is of the quick-opening type, operated by a lever.

The rolling-mill engine in Fig. 221 is of the kind that reverses for each pass of the metal between the rolls, or that drives a two-high roll-train—as distinguished from the continually running engine on a three-high train. In either mode of running, the engine is subjected to exceedingly severe force-actions, and must be made very strong. The reversing-engine has no fly-wheel,

Digitized by Google

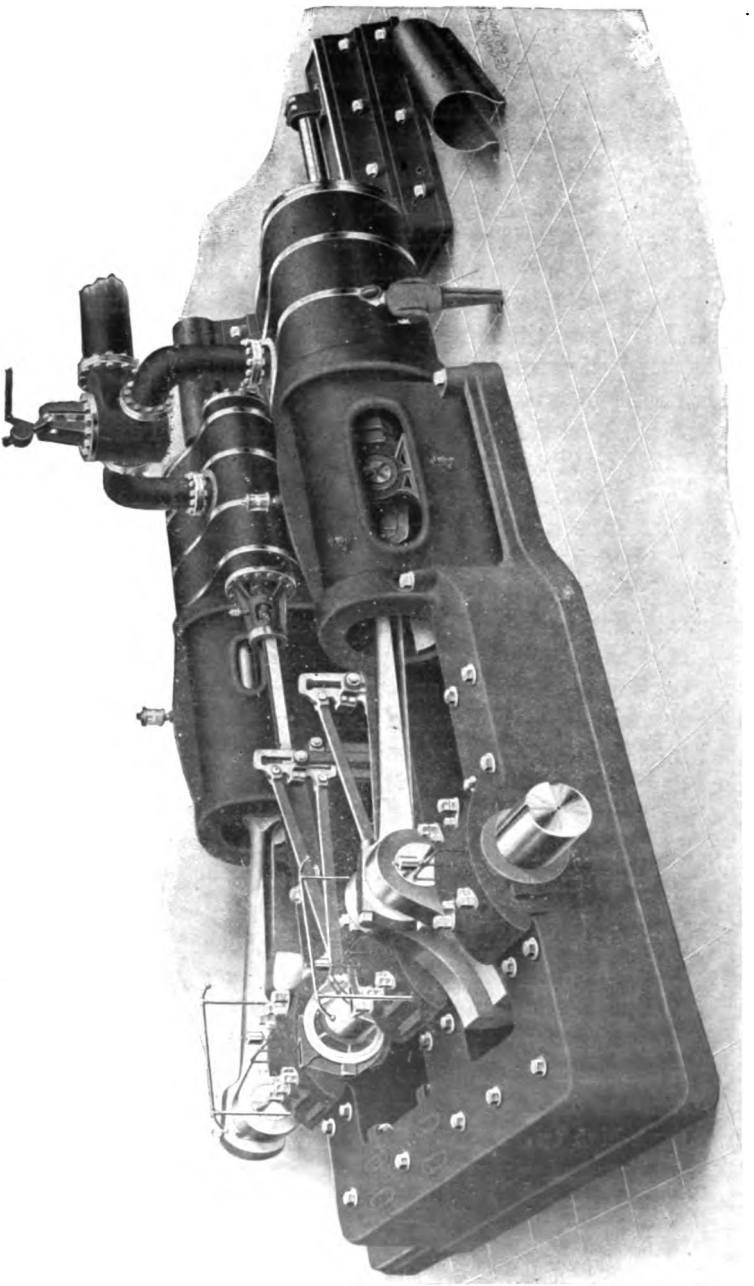

Digitized by Google

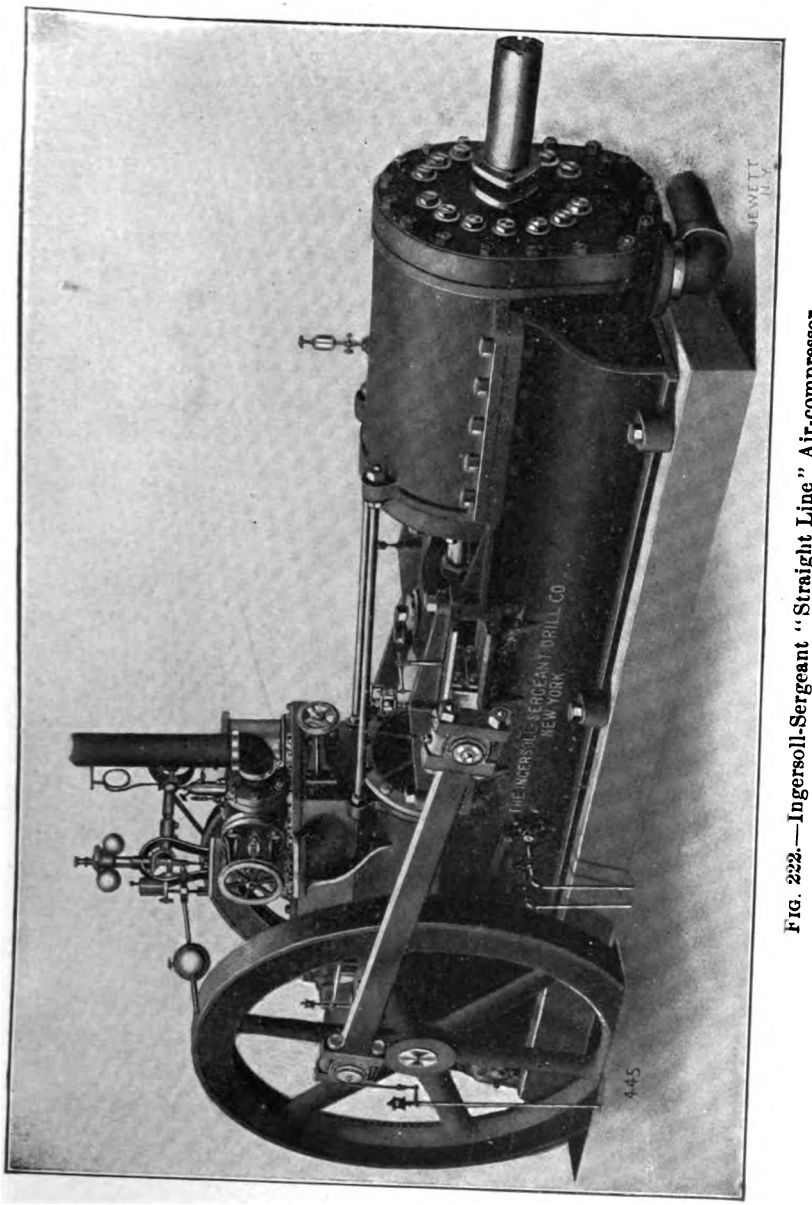

FIG. 222.—Ingersoll-Sergeant "Straight Line" Air-compressor.

Digitized by Google

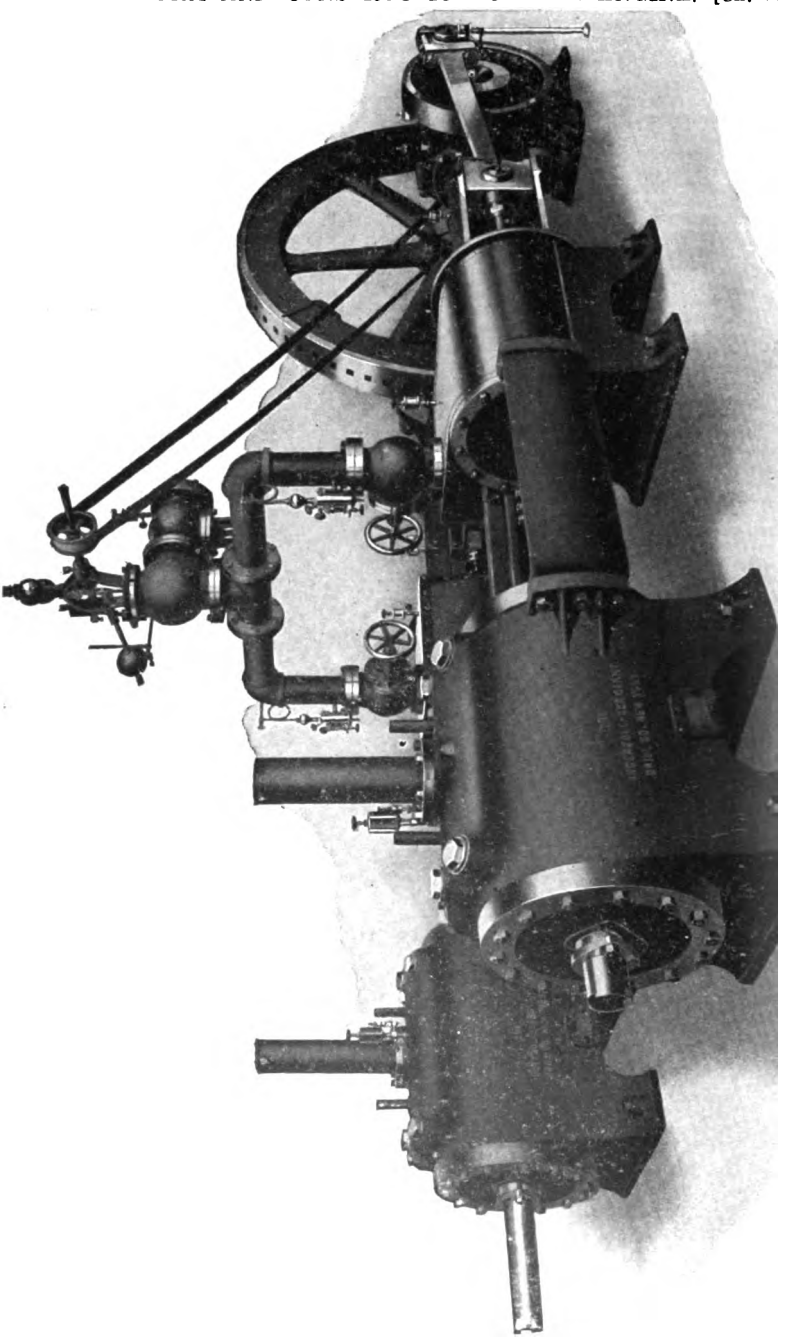

Digitized by Google

necessarily, and is always of the duplex, single-expansion type. It is hand-controlled, with a special apparatus for quickly moving the heavy reversing-gear, shown in Chapter X. It will be noted that the bed-plate of this engine has a different shape at the two sides, since one element is of the center-crank, the other of the side-crank, form. The largest piece of the frame, on the center-crank side, weighs about 84 tons, and the whole engine about 500 tons.

(*m*) AIR-COMPRESSORS AND BLOWING-ENGINES.—The distinction between these two classes of machines is based on service and air-pressure produced, with resulting great differences in form. "Compressed air" is used chiefly for driving rock-drills and the other machines employed in mining and quarrying, and for small tools and portable machines in workshops. For all this line of service, the pressure is usually from 60 to 100 lbs. per square inch; but there are other cases where very high pressures are required, running up to several thousands of pounds per square inch. The function of the air-compressor is, then, to deliver a relatively small volume of air at a high discharge-pressure. The blowing-engine, on the other hand, must deliver very large volumes of air, but with a low ratio of compression; in blast-furnace work the pressure is usually somewhere between 15 and 30 lbs. per square inch (above atmosphere, of course), and the compression-ratio is from 2 to 3.

A single air-compressor, the simpler and more compact form of the machine, is shown in Fig. 222. The steam-cylinder is between the cross-head and the shaft, so that the engine proper has what is called the "return connecting-rod" arrangement, which makes it very short. The valve-chest is on top of the cylinder; and the running of the machine is controlled by a compound governor, which shuts off steam at a certain speed and also when a certain air-pressure is reached. The compressor-cylinder is simple in external form. Air is drawn in through the hollow extended piston-rod, and the inlet-valves are in the piston: the discharge-valves are under the caps in the cylinder-head. Always, the cylinder of a compressor is surrounded by a water-jacket, to prevent it from becoming overheated, and there must be a constant circulation of cooling-water.

A duplex compressor of very simple outline is illustrated in Fig.

Digitized by Google

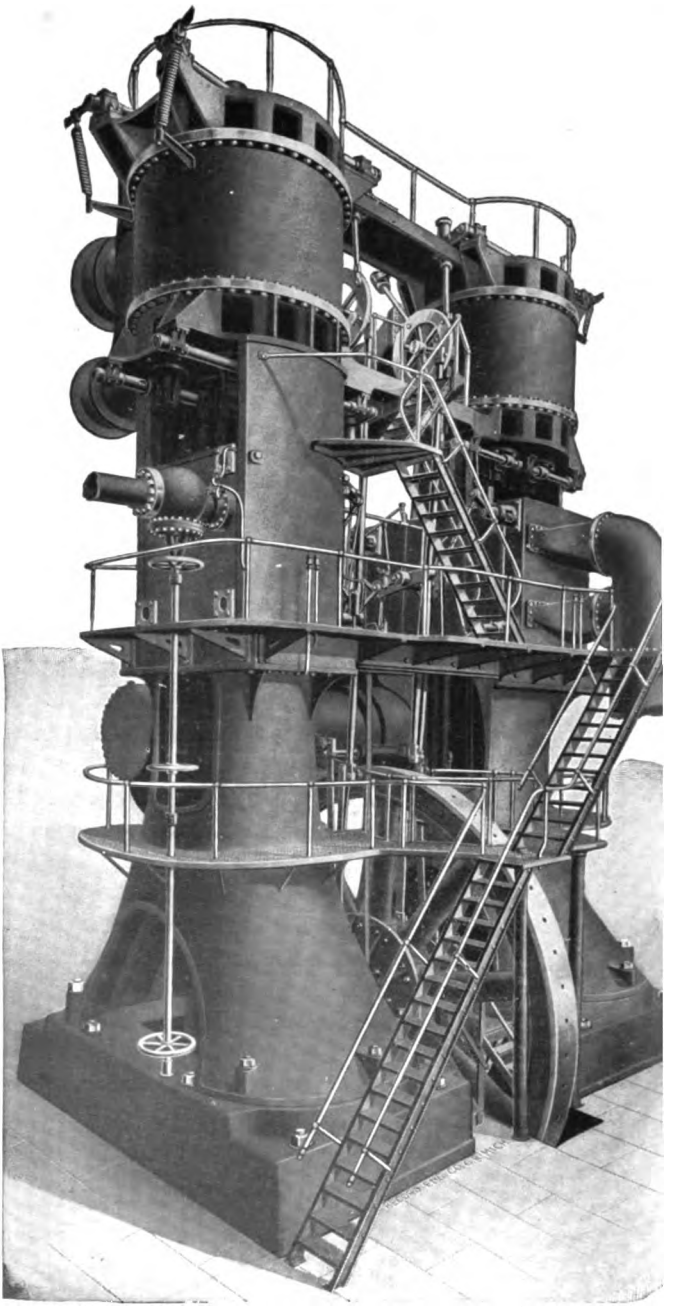

FIG. 224.—Tod Blowing-engine at Ohio Works of Carnegie Stee
Youngstown, Ohio.

Digitized by Google

223. Here both steam-cylinders and air-cylinders are duplex, as well as the general form of the machine; but frequently the steam-engine is compound and the air-compressor works with two stages, just the reverse of those of the compound engine. There is then a cooling receiver, or inter-cooler, between the cylinders, with a coil or group of pipes through which cold water flows.

For large installations, where economy becomes of greater absolute importance, the engine is given the Corliss valve-gear: and often the valves of the compressor are moved mechanically, instead of by the air itself as in the examples shown.

(*n*) BLOWING-ENGINES are almost always vertical. For moderate capacities, the same cylinder-arrangement as in the air-compressor at Fig. 222 is usual, with the shaft at the bottom and the air-cylinder at the top: this is called the long cross-head type. Another form, the steeple blowing-engine, analogous to Fig. 223 in general arrangement, is shown in Fig. 224. Up to the air-cylinders it is just a big cross-compound Corliss engine. The particulars of this engine are as follows: steam-cylinders 54″ and 102″ in diameter, twin blowing-cylinders 108″ in diameter, stroke 60″; rated steam-pressure, 150 lbs. by gage; air-pressure 18 to 30 lbs.; speed, controlled by an adjustable fly-ball governor, 25 to 50 R.P.M. A more recent construction of the same design has the engine cylinders increased to 58″ and 110″ in diameter, the other leading dimensions remaining unchanged. The engine can compress 60,000 cu. ft. of free air per minute to 25 lbs. gage-pressure. Its weight is about 1,300,000 lbs.

These large, high-pressure blowing-engines have metallic valves on the air-cylinders, mechanically operated; but the study of these is outside of the province of this work. The cylinders are not water-jacketed, so that the compression raises the air to quite a high temperature—high enough to destroy leather valves such as were used with lower pressures.

In a third type, the compressor element takes the form of a complete engine, the air-piston being driven from the crank-shaft through the usual mechanism of connecting-rod and cross-head: then steam-engine and air-pump are combined into a machine which looks much like any duplex vertical engine. The advantage

Digitized by Google

of this arrangement is, that by choosing the proper angle bet
the cranks, the two curves of turning-force—of the steam a
the air—can be made to agree closely throughout the revol
so that the machine will run smoothly, even at low speeds.
the maximum driving-force on the engine-crank comes much e
in the half-revolution than does the maximum resistance o
compressor-crank, the former is placed somewhere near eith
degrees behind or 135 degrees ahead of the latter. Sometim
steam-engine is horizontal, the blower vertical: and this arr
ment is usual in machines for compressing ammonia or some
refrigerating medium.

(*o*) STEAM-PUMPS.—To the type of machine represented by
225 and 226, with only the one main moving piece consisting
pistons and their rod, the name steam-pump is given. There
mechanism to define the stroke of the piston, determining bo
length and the manner of movement: so that we have here
of free or purely force-controlled motion, as distinguished fro
mechanically constrained motion of the engine with shaft ar
wheel. The most interesting feature of these direct-acting s
pumps is their valve-action. The main mechanism is eleme
in both form and working; but the valve-gear, with its d
so controlling the steam-distribution that the stroke shall b
certain length, is worthy of study: if the stroke is too short,
will be a waste of steam through excessive clearance-v
together with loss of pumping capacity; if it is too lon
piston will strike the cylinder-heads. A description of the
and working of several typical valve-arrangements will be
in § 60.

There are two typical forms of the steam-pump, the
and the duplex. Fig. 225 shows a small single pump, of th
frequently used for boiler-feeding. It would be possible to
a rigging through which the piston, when near the end
stroke, would move the valve into the position proper for th
stroke: but any such direct-driving valve-gear is likely to
act at low speed. Instead, the idea is universally applied c
ing the main piston move a small secondary valve, which c
the supply of steam to a secondary piston that moves the

Digitized by Google

valve. In the form of this device there is a very considerable variety, but the principle is the same all through.

In Fig. 226 is illustrated an example of the duplex pump, more complicated in that each steam element is a tandem-compound engine. The valve-gear as here shown is universally in use on pumps of moderate size, each piston moving the valve for the other side.

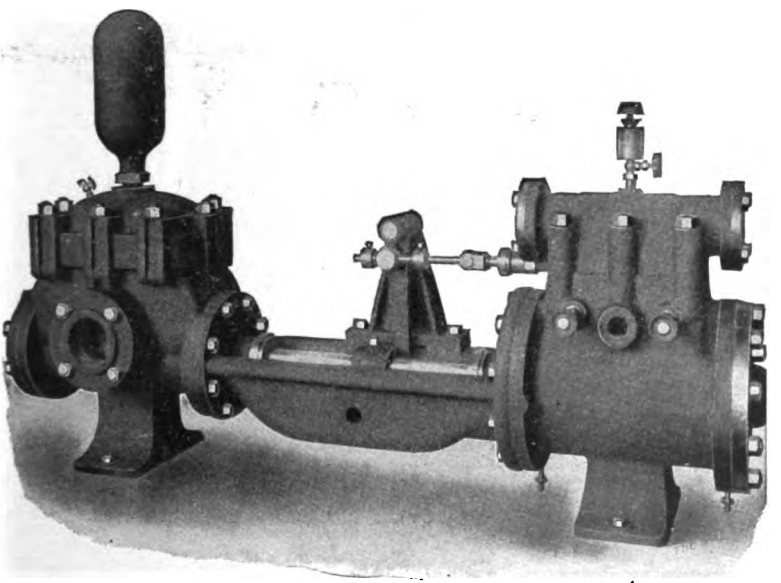

FIG. 225.—Single Boiler-feed Steam-pump.

The steam-driven water-pump works against a practically constant resistance in the water-cylinder, and secures an appropriately constant driving force by taking steam for its whole stroke. This makes it, necessarily, a very inefficient steam-engine. But when air is pumped, whether in the air-pump for a condenser or in the small air-compressor used to supply the air-brake system on a railroad train, there must be a still greater departure from the normal steam-cycle: because it is now necessary to have an effec-

Digitized by Google

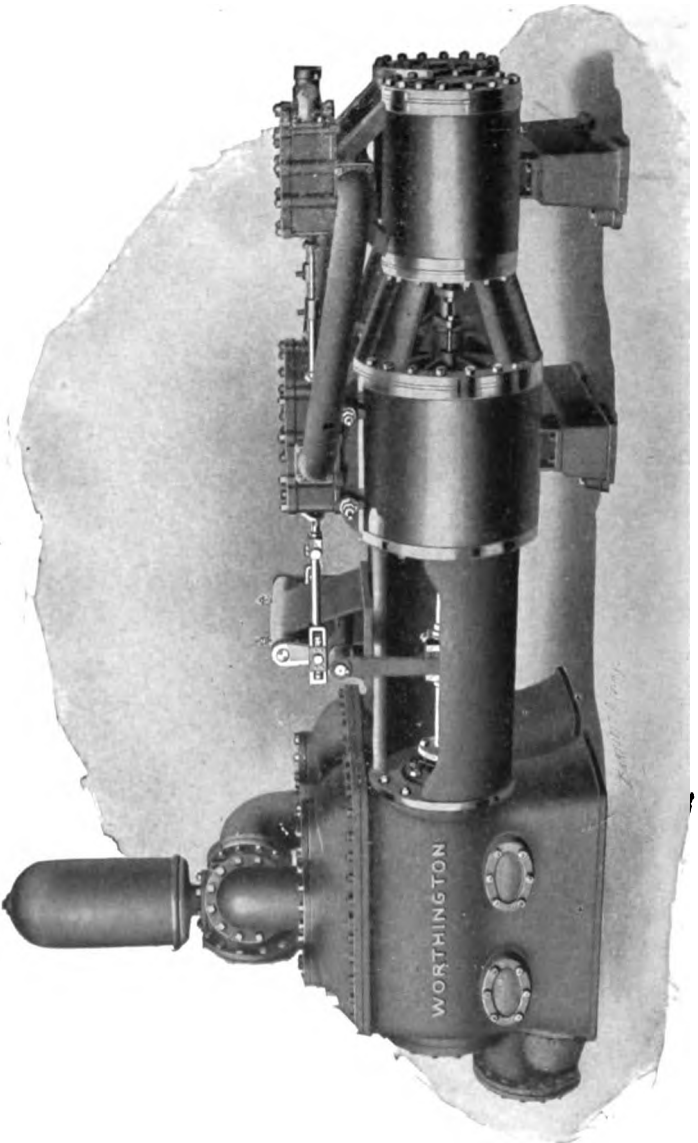

Fig. 226. Duplex Compound Steam-pump.

Digitized by Google

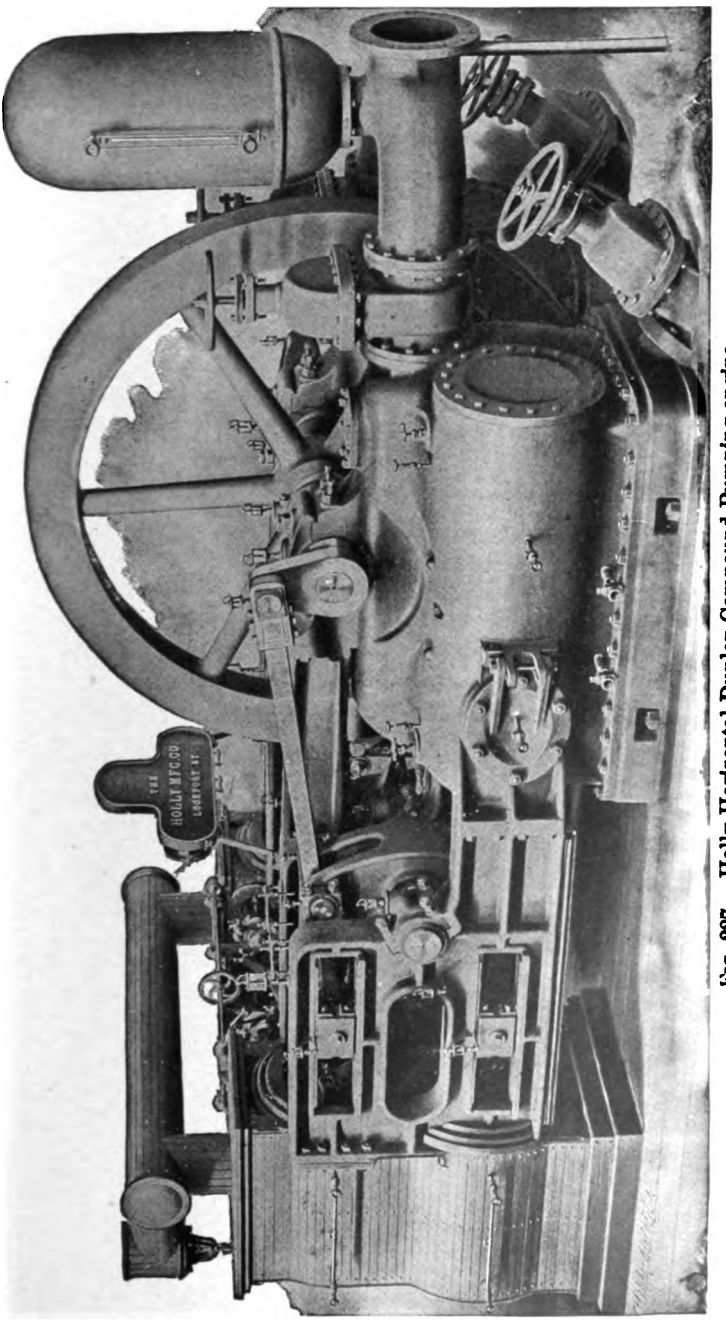

Fig 227.—Holly Horizontal Duplex Compound Pumping-engine.

Digitized by Google

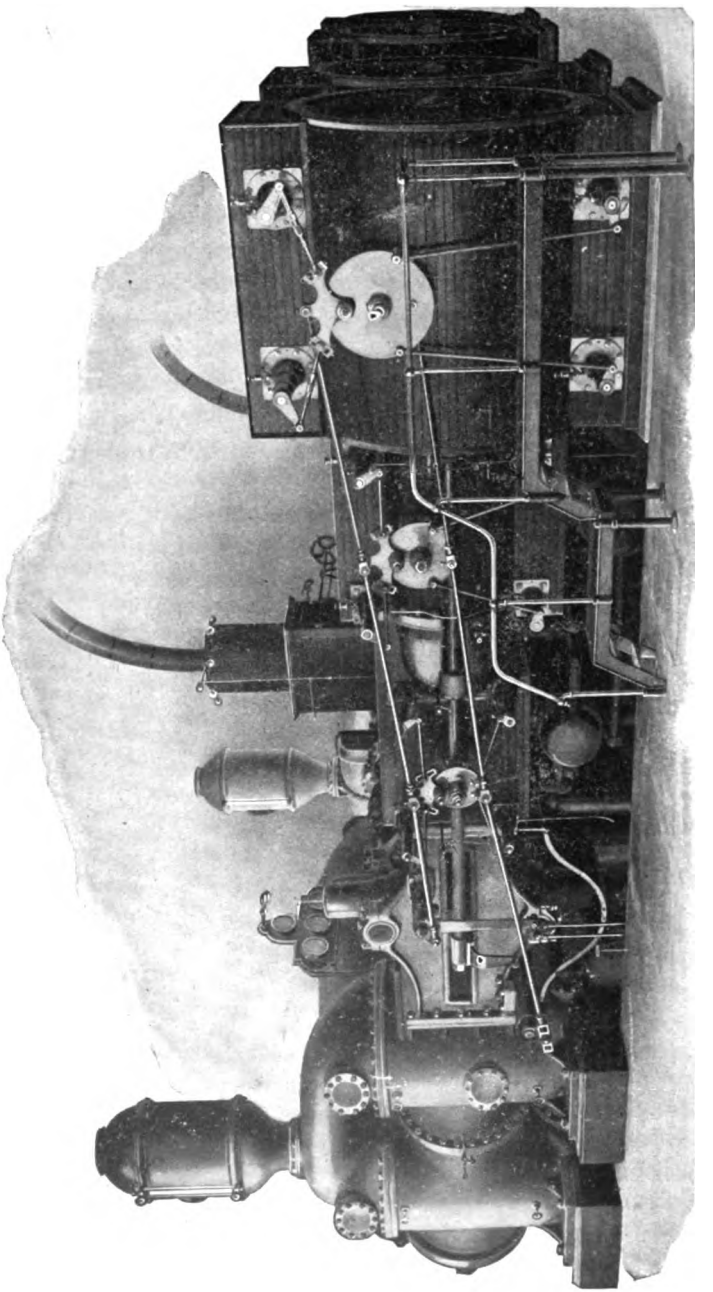

Digitized by Google

tive driving-force which will increase toward the end of the stroke, and be greatest during the short period when the compressed air is being forced out against the discharge-pressure. Both single and duplex pumps are used for condenser air-pumps, but the standard air-brake pump is of the single type.

(*p*) PUMPING-ENGINES.—Different forms of the large water-works pumping-engine are shown in Figs. 227 to 230. The Holly engine is of the duplex quarter-crank form, the steam end on each side being a complete direct-expansion compound engine. The low-pressure piston-rod extends to the pump-cylinder, and the high-pressure cross-head is coupled in through a heavy vertical rocking-lever, as is further shown in skeleton outline on Fig. 236. The valve-gear is of the Corliss type, with some special features; and the cut-off, variable on the high-pressure cylinder, can be adjusted by hand, or placed under automatic control.

Fig. 228 shows a large pumping-engine of the indeterminate-stroke type, developed from the steam-pump. The three cylinders are in line, but while the high and intermediate pistons are on one rod, the largest piston has two rods, which extend forward on both sides of the smaller cylinders, and engage the projecting ends of the cross-head. The valves and gear are of the general Corliss form, but the releasing feature is omitted: the main wrist-plates (the circular disks at the middle of each cylinder) are oscillated by the cross-head on the other side; but the small auxiliary plates which control the steam-valves receive an additional movement from the cross-head on their own side. This combination gives the valve a complicated motion; the difficulties in the way of an exact determination of this motion being increased by the fact that there is no closely definite time-relation between the strokes of the two cross-heads.

The function of the fly-wheel in a pump or air-compressor is to equalize or average up the driving-forces and the resistance, throughout the revolution. If the steam is cut off rather early, the effective steam-pressure will be high at the beginning of each stroke, and will diminish as the piston advances. To store up the excess steam-work in the first part of each stroke, and give it back to make up the deficiency toward the end, a special equalizing de-

Digitized by Google

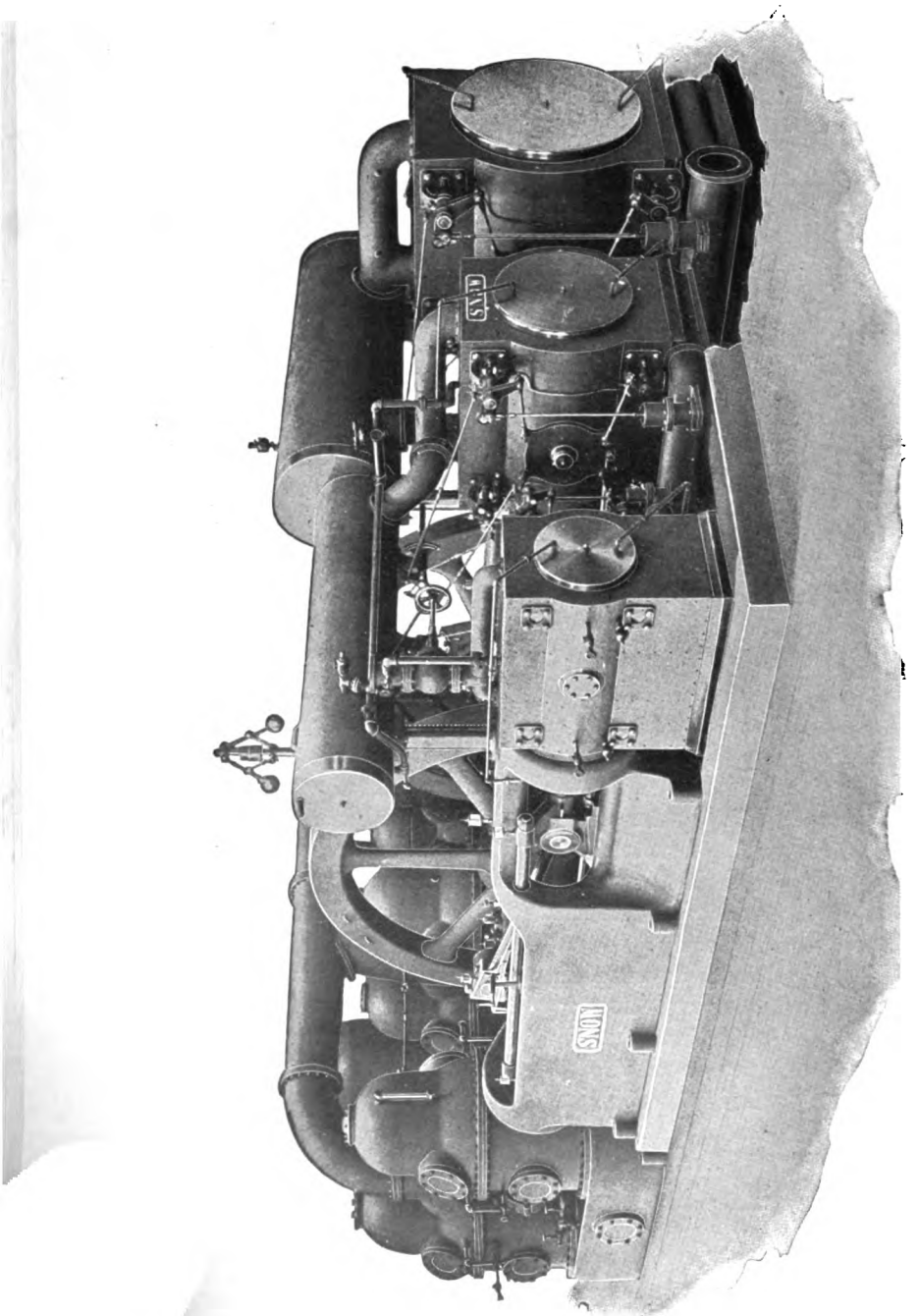

Digitized by Google

vice is used instead of a fly-wheel on the machine shown in Fig. 228; this is drawn in outline on Fig. 236, where the working is explained.

Fig. 229 shows a fine horizontal triple-expansion pumping-engine. It has three cranks at angles of 120 degrees, which arrangement not only produces a smooth-running engine, but also causes the water to be delivered with very little pulsation, or variation in pressure. The manner in which the driving-force is transmitted from engine to pump, by parallel rods displaced diagonally from the axis, so as to clear the connecting-rod and crank, is clear from the photograph. This engine has the regular Corliss valve-gear, with a fly-ball governor controlling the cut-off in all three cylinders: the special wide-range cut-off gear, often used, will be described in the next chapter. Above the cylinders are placed the two re-heating receivers.

The final example, Fig. 230, shows a type of machine very frequently used in plants of large capacity. One advantage of the vertical arrangement is, that if the pumping-station is located on a river liable to great changes in height, the pump-cylinders can be placed low enough for effective suction without danger of the engine being drowned by every flood. There is, of course, always the point in favor of a vertical engine that the weights of the moving parts are less likely to cause uneven wear of the sliding surfaces: and this matter is of more importance in a pumping-engine than in lighter and quicker-running machines.

In this pump, the water-cylinders—almost concealed behind the large air- and valve-chambers—are of the single-acting type; water is drawn in beneath the plungers as they rise and expelled as they descend. Besides the general arrangement here shown, another plan is to bring the main foundations up to the base of the engine proper, and then suspend the pumps. In this figure, the first gallery, at the engine-shaft, marks the level of the main floor of the pump-house. The valve-gear is of a modified Corliss form, and is driven, not by the main shaft, but by an auxiliary shaft on the front of the engine; and this is driven by two parallel connecting-rods, at the two ends, with the cranks at right-angles.

Digitized by Google

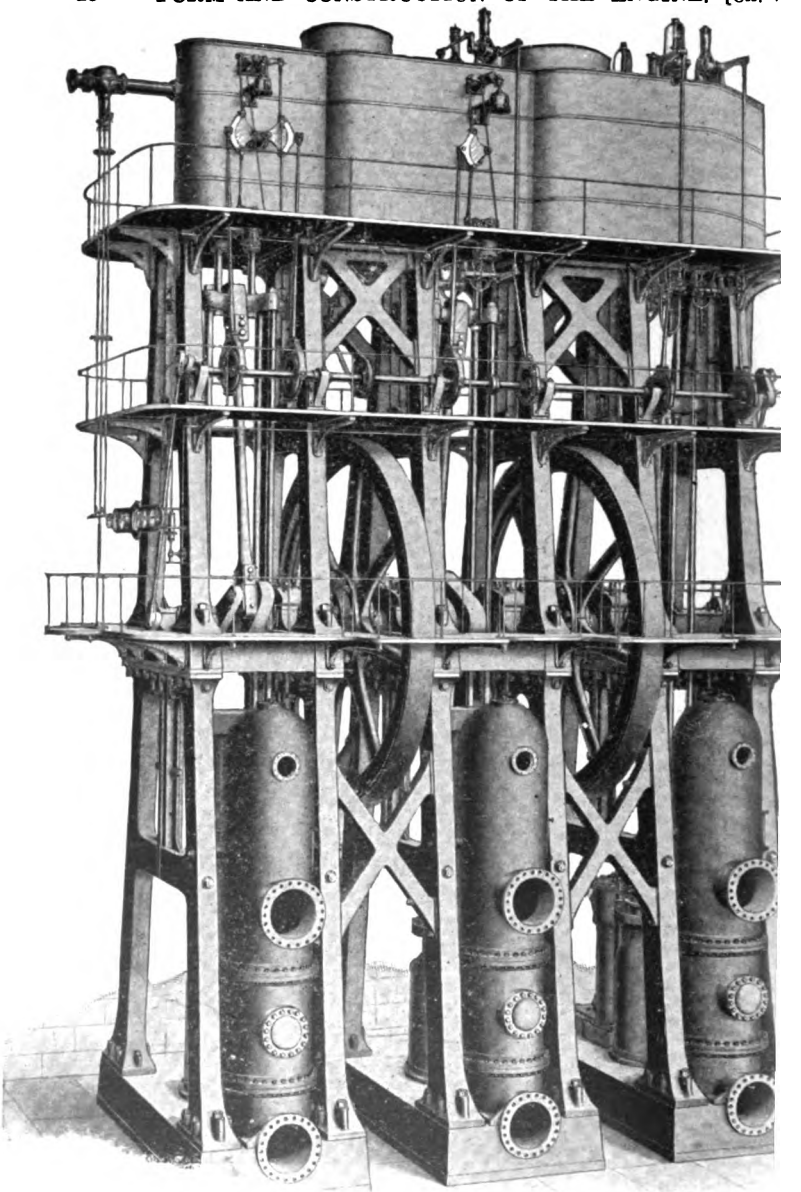

FIG. 230.—Reynolds Vertical Triple-expansion Pumping-engine

Digitized by Google

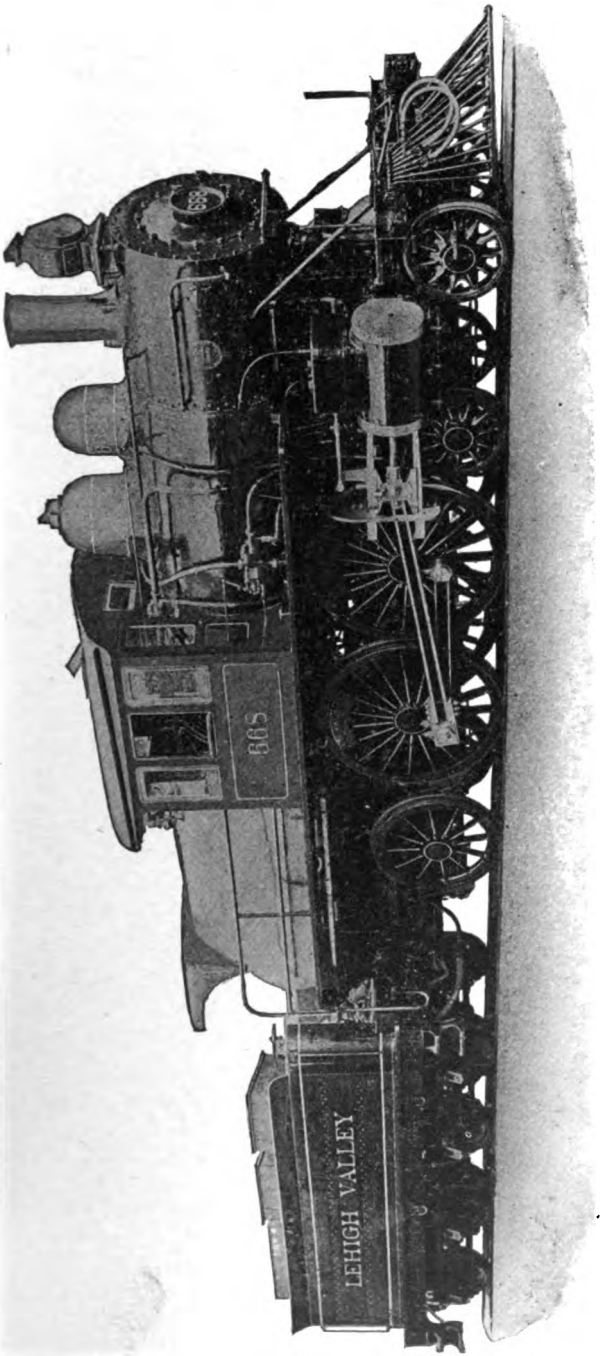

FIG. 231.—High-speed Locomotive, "Atlantic" Type. Baldwin Locomotive Works.

Digitized by Google

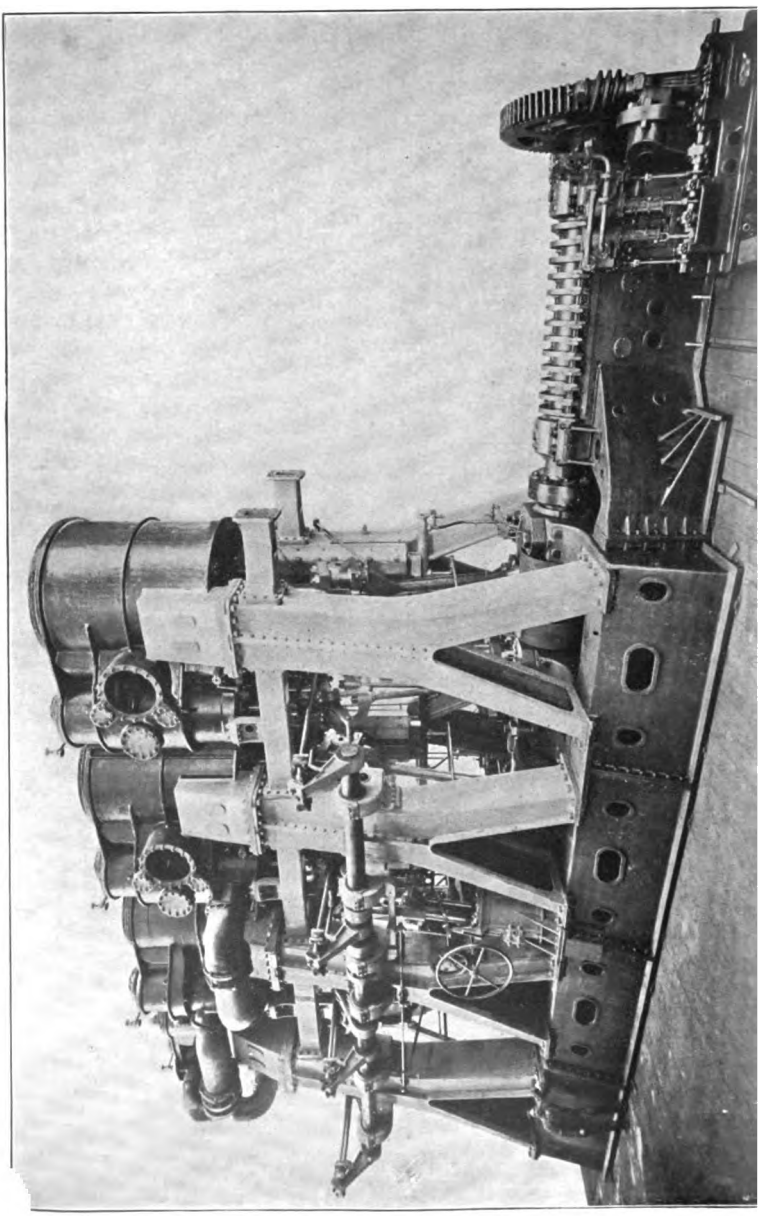

Digitized by Google

(q) THE LOCOMOTIVE.—This type of engine (or rather, of complete steam-plant) keeps itself so continually in public view that a description of its general form would be superfluous. The chief variations in the major details are found in the wheel-arrangement, the shape of the boiler-furnace, and the cylinders—the last being simple or compound. The locomotive illustrated in Fig. 231 is of the "Atlantic" type as to the wheels, has the wide fire-box or furnace, and is a simple engine. The picture is given especially to show the form of the engine proper, and will be convenient for reference when some of the less evident details are taken up.

(r) MARINE ENGINES.—The examples given in Figs. 232 to 235 are all of the usual type for driving screw-propellers—what is called the vertical, inverted, direct-acting engine. In this descriptive title a good deal of history is involved: the engine is "direct-acting" when it turns the propeller-shaft directly, instead of acting through a walking-beam or other intermediate gearing; and when an engine was directly applied to turning paddle-wheels, the cylinder was below, and the shaft above, hence the adjective "inverted." From any other point of view, the arrangement with the shaft-bearings down on the foundations and the cylinders up in the air seems natural and normal.

The general form of all modern screw-propeller engines is practically the same. The variations come, first, in the number and arrangement of cylinders and cranks; next, in the form of the framework; last, in the disposal of the accessories, the condenser and its pumps, which are quite often incorporated with the main engine, but are more frequently independent, at least in the higher class of engines.

As to the cylinder-arrangement, a general idea can be got from these photographs, and one sectional drawing will be found in Fig. 259. This side of the subject is to be more fully taken up later, but a brief outline properly finds place at this point. There are some single-expansion engines yet running in ferry-boats and river-steamers, and a good many compounds in the older ships; but the engines now built are either triple- or quadruple-expansion, with from three to six cylinders and usually three or four cranks. The three-cylinder triple with three cranks

Digitized by Google

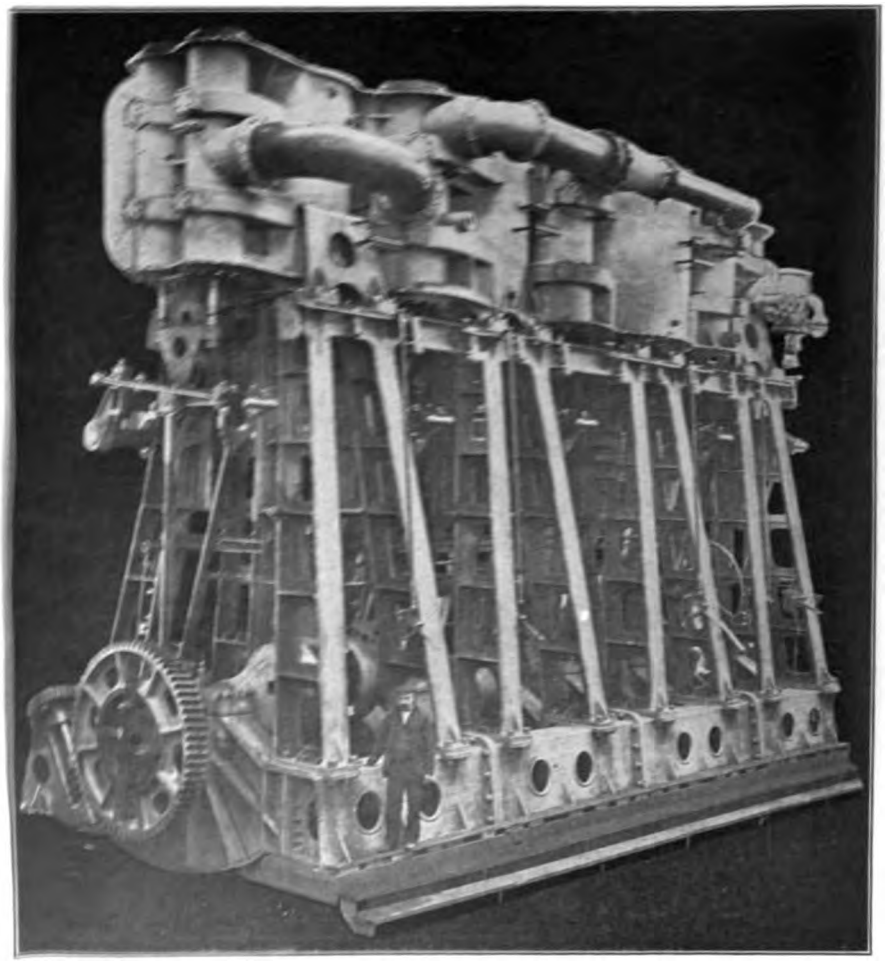

FIG. 233. Engine of Twin-screw Pacific Mail Steamship "Siberia": four-crank quadruple expansion; cylinders 35″, 50″, 70″, 100″ × 66″; each engine rated 9000 H.P. Built at Newport News in 1901.

(Figs. 234 and 259), the four-cylinder triple (two equal low-pressure cylinders Figs. 232 and 235), and the four-crank quadruple (Fig. 233) are the typical arrangements. Five-crank engines have been built; but if the quadruple has to be carried to more

Digitized by Google

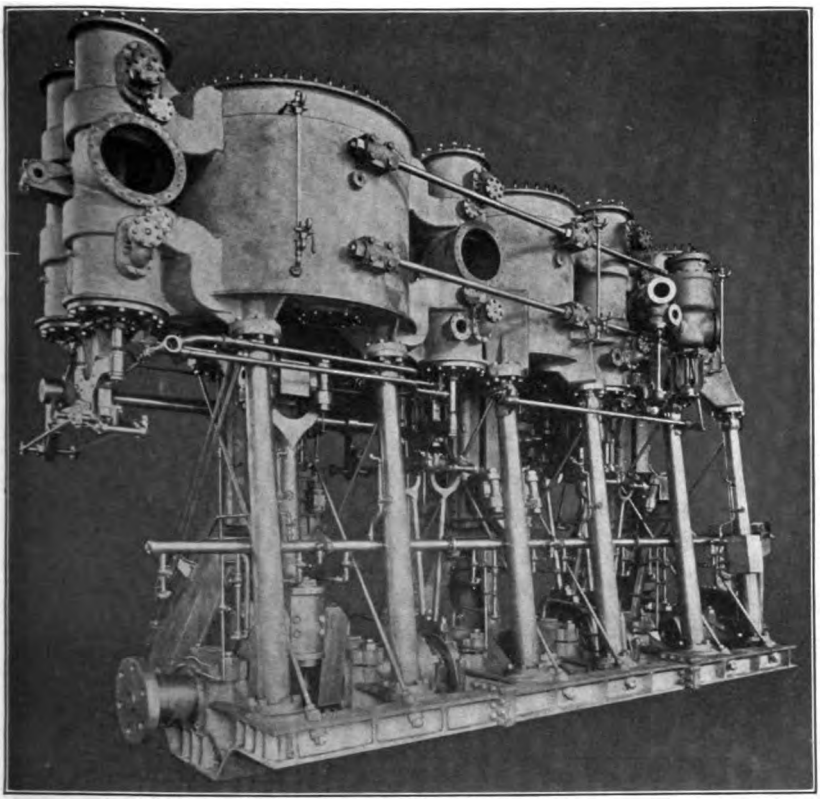

FIG. 234.—Engine of Twin-screw U. S. Battleship "Indiana"; built at Cramp's in 1895; three-crank triple-expansion, 34½", 48", 75" × 42"; mean speed of engines on official trial, 131 R.P.M.; I.H.P. of two engines, 9500.

than four cylinders (to keep the L.P. cylinder from becoming unwieldy), a tandem arrangement is usually adopted. The most prominent example of this, used on several large steamers, has two H.P. and two L.P. cylinders, an H.P. on top of each L.P., with the first and second intermediates each driving a crank.

In the matter of framework, the four common types of construction are illustrated in the examples given. Fig. 232 has double Y frames, front and back under each cylinder; in Fig. 233

Digitized by Google

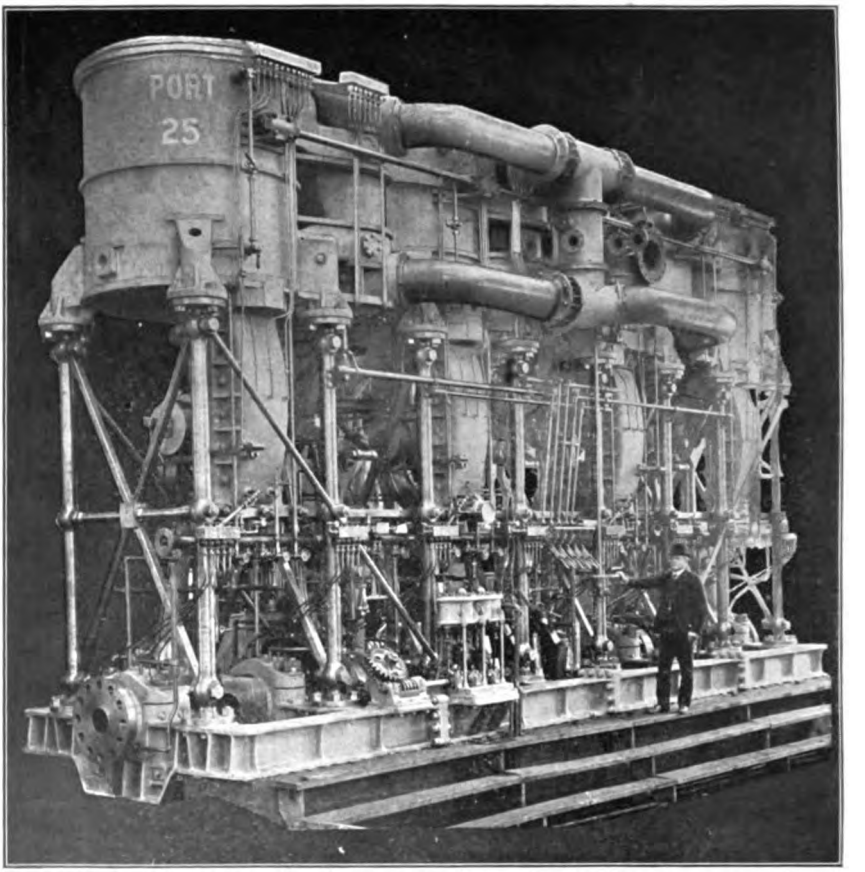

FIG. 235.—Engine of Twin-screw U. S. Battleship "Missouri"; built at Newport News in 1902; four-crank triple-expansion, 34½", 53", 63"–63" × 48"; each engine 7800 I.H.P.

there are four cast-steel columns in each section of the frame; in Fig. 234 the section contains a cast-iron Y housing at the back and two forged-steel columns in front; while Fig. 235 shows the all-forged frame, the war-ship type. The last has long been the standard torpedo-boat type; but is now used, in the United States Navy, for the largest engines built. The structural features of these various frames will be further discussed in the next section.

Digitized by Google

These photographs were all taken, of course, when the engine was in the erecting-shop, as neither the distance nor the illumination for a general view is possible on board ship: and thus to get the cylinders without their non-conducting covering is a decided advantage. In all four cases, the after end of the engine is in the foreground, showing the connection for the propeller-shaft: and in Fig. 232 the first section of this shaft, which carries the thrust-journal, is shown: this may be considered, and in Fig. 232 actually is, a part of the engine. A secondary apparatus, best shown in Figs. 232 and 235, is the little turning-engine, which acts upon the main shaft through two worm-gears. This is used for turning over the engine when making repairs and when warming it up before starting: the intermediate gear-shaft is always so supported that it can be swung out of "mesh" when the engine is running.

The valve-gears of these engines, all of the same type, will be referred to later: a notable feature—in which they do not fairly represent general practice—is the use of piston-valves on all the cylinders; and in Figs. 233 and 234 we have examples of four valves to one large cylinder, each taking its share in controlling the whole steam-distribution.

Besides the main steam-piping, most fully shown in Figs. 233 and 235, and which includes a number of by-pass connections from the steam inlet to the different cylinders, there are several elaborate systems of small pipes about a marine engine. First comes the drain-piping, to carry off water from all the cylinders and valve-chests, especially when the engine is standing idle; this is not visible in any of the engines illustrated; but the hand-levers for controlling the drain-cocks are shown, all grouped together near the throttle-valve wheel in Fig. 235, distributed along the front of the engine in Fig. 233. Next comes the oil-piping, simple as to its units, but with a great many of them, as best appears on Fig. 235. Finally, there is an extensive system of water-piping, whereby cooling-water can be supplied to all the bearings and to the cross-head guides.

(s) Various Modifications of the Engine-mechanism.—In Fig. 236 are given skeleton-outlines of various engine-mechanisms,

Digitized by Google

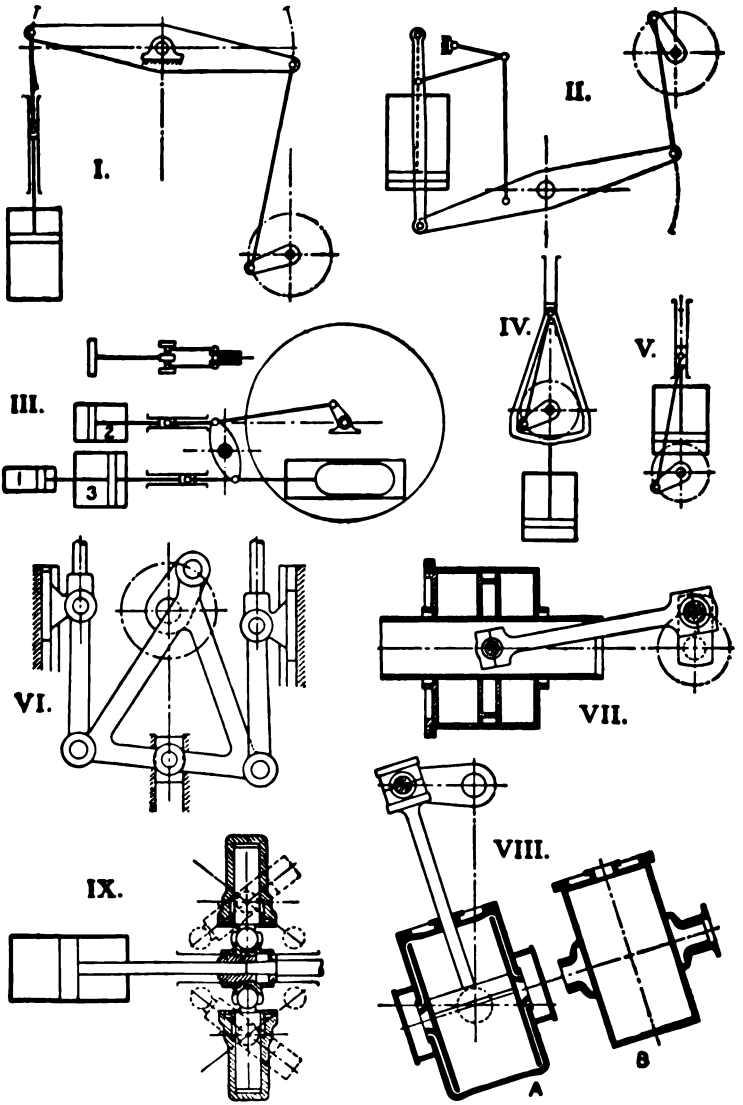

FIG. 236.—Various Forms of the Engine Mechanism.

I to III. Engines with walking-beam; IV, V. The return connecting-rod; VI. The triangular connecting-rod; VII. The trunk engine, double-acting; VIII. The oscillating engine; IX. The Worthington high-duty attachment for steam-pumps.

Digitized by Google

some of them now in use, others chiefly or wholly of historic interest.

The earliest engines built, for mine-pumps with a heavy pump-rod running down the shaft, were of the walking-beam type; and in the application to driving machinery, to common pumps, to blast-furnace service, and to the turning of paddle-wheels on steamers, this type, as outlined at I., was very largely used. A modified form for marine service is the side-lever engine at II. In I. the upper end of the piston-rod is guided by a cross-head, as is now universal practice; in II. a "parallel-motion" of jointed links is used: this, in various forms, was standard practice in the early days of steam-engineering.

In connection with this matter of the walking-beam, the mechanism of the Holly pumping-engine, Fig. 227, is outlined at III.; the plan view shows how double connecting-rods are used from the cross-head to the beam, and how the latter is made double, so as to give room for the main connecting-rod at the top and to clear the pump-rod at the bottom: incidentally, the cylinder arrangement in a triple-expansion engine of this type is shown. Some designers of pumping-engines have made a very free use of the oscillating lever in the main mechanism, frequently giving it a triangular or "bell-crank" form, and securing the advantage of a longer stroke and higher piston-speed for the engine than is allowable for the pump.

The return connecting-rod arrangement, in two forms, is sketched at IV. and V. The "steeple" engine, IV., belongs to early marine practice; it is intended rather to get a large cylinder into a comparatively low space beneath the paddle-shaft than to shorten up the machine as a whole; and the heavy triangular frame which carries the piston-rod around and past the connecting-rod is a bad feature. The simple return-rod engine, used for the steam end of air-compressors, and also in marine practice when space is crowded, is skeletonized at V.

The triangular connecting-rod, VI., has been used by several designers (or inventors): for the description of an unusually complex engine of this type, see *Engineering*, 1899, II., page 580.

Two arrangements by which the engine is greatly shortened

Digitized by Google

are next shown; the trunk-engine, VII., combines piston cross-head in one, as already explained in connection with 207. The oscillating engine, shown at VIII., is a kinei variation from the common type, its frame corresponding the connecting-rod in the usual mechanism. Steam is condu to and from the cylinder through the trunnions upon whi turns, so that the engine properly belongs to the era of low-pre and moderate speed. To transmit the valve-movement fron shaft to the valves (on the oscillating cylinder) is an intere problem.

Sketch IX. shows a special mechanism used on the pum engine in Fig. 228—the Worthington high-duty attachr Hydraulic plungers from two oscillating cylinders bear upor cross-head; in the first part of each stroke these plunger forced into their cylinders, resisting the movement of the pi rod; in the latter half, they assist the driving-force. The c ders are in constant communication either with the disch pipe from the pump, or with a special small accumulator, indir connected to the force-pipe. These compensating cylinders i duce a force-action very similar to that of the inertia of the r rocating parts in a crank-controlled engine, and perform the tion of a fly-wheel, by storing up the excess-work of the st pressure at the start and returning it later, thus making it po to use quite a fair ratio of expansion in each cylinder.

(*t*) THE "LAYOUT" OF AN ENGINE.—The general descripti an engine, besides covering matters of service, position, arr ment of cylinders and cranks, type of valve-gear, etc., sl set forth also certain particulars as to the arrangement o mechanism and the direction of running, according to the fc ing terms:

Right and Left.—It has been the custom to call a horiz engine "right-hand" if, when we stand back of the cylinde face toward the shaft, the wheel is at the right. A decidedly logical scheme is got by reversing this practice, calling the opposite the wheel and valve-gear the front of the engine, going by the right or left position of this front. Then the en in Figs. 209, 210, 212, 213 are right-hand, and those in Figs.

Digitized by Google

206, 211, left-hand; and in a cross-compound engine, as Fig. 216, this makes the right-side element right-hand, the left-side, left-hand. In a center-crank engine the distinction is less marked and of less importance; it is best simply to specify on which side the governor is placed, and on which side the generator, in a direct-connected unit.

Over and Under.—A horizontal engine runs over if it makes its forward stroke—the piston moving toward the shaft—while the crank traverses the upper part of its circle: in which direction of running the pressure of the cross-head upon the guides is normally downward. The characteristic position of the engine mechanism, in Fig. 110, belongs then to a right-hand engine, running over, and with right-hand or clockwise rotation when viewed from the front.

In a vertical engine, the front side is properly that toward which the crank-pin travels when traversing the upper part of its path. With a symmetrical frame, as in Figs. 217, 218, 232, and 233, there is little in the structure to mark "front" and "back"; but with the type of framework in Figs. 202 and 234, and with the one-sided slipper type of cross-head, the open side is naturally the front, and is the one toward which the crank turns over when the bottom of the cross-head is pressing upon the guide.

If a vertical engine is symmetrically loaded, as with a generator at each end of the shaft or with one in the middle, no clear distinction as to right and left rotation can be drawn. With the marine engine, if we stand back of the engine and face forward, right-hand rotation corresponds to forward running with a right-hand screw; and another reason for calling this a right-hand engine is that its front will be at the right, from the view-point specified. Then with twin-screws turning outboard (outward at the top), the starboard (right-side) engine will be right-hand, the port engine left-hand. Whether it is better to have the screws turn outboard or inboard is a point upon which marine engineers differ with no overwhelming arguments for either arrangement.

(*u*) Speed of Engines.—This is measured in two ways, by the rotative speed or the revolution per minute, and by the piston-speed or the distance in feet travelled by the piston in one minute.

Digitized by Google

The data in Tables 41 A and 41 B will give a good idea of the usual range in stationary practice.

TABLE 41 A. DATA FOR HIGH-SPEED ENGINES.

Stroke.	R.P.M.	F.P.M.
12″	260 – 300	520 – 600
16″	210 – 250	560 – 667
20″	180 – 210	600 – 680
24″	150 – 180	600 – 720

TABLE 41 B. DATA FOR ENGINES OF THE CORLISS TYPE.

Stroke.	R.P.M.	F.P.M.
24″	85 – 125	340 – 500
30″	80 – 115	400 – 575
36″	80 – 110	480 – 660
42″	75 – 100	490 – 700
48″	70 – 90	560 – 720
60″	60 – 75	600 – 750

It is at once apparent that the distinction between the two classes of engines is found chiefly in the R.P.M. It will be noted further that the range in piston-speed with any particular stroke is greater in the second table than in the first; and for the Corliss engine, much more than for the smaller type, the lower set of limits represents what has long been usual practice, the upper set stands for more recent installations.

Accepting for a convenient basis of comparison this usual range from 500 to 750 ft. per min., as set forth in the tables, a wider view of practice in this matter will yield the following results:

The lowest speeds are found in steam-pumps like Figs. 225 and 226, which are built with the stroke-length varying from 4″ to 24″: for 6″ and less, the proper number of "revolutions" is usually set at 75, or of single strokes at 150, giving 75 F.P.M. or less; for 8″ and more, the limit of piston-speed is fixed at 100 F.P.M. Large, long-stroke pumps without fly-wheel control, like Fig. 228, have higher piston-speeds, rising to 160 F.P.M. Pumping-

Digitized by Google

engines with fly-wneels come next, the piston speed usually lying between 120 and 250, sometimes rising to 350, and in extreme cases, with a very long stroke, exceeding 400 F.P.M. The smooth running of any pump is very much a question of the uniform flow of the current of water: it is possible to have pulsations set up which will bring very severe strains upon the body of the pump and all its working parts. Other things being equal, it would appear that three pump-cylinders connected by cranks at 120°, as in Figs. 229 and 230, ought to give the most uniform discharge possible in any arrangement of the sort, having a slight advantage over the quarter-crank duplex pump.

As to blowing-engines, we will take the example in Fig. 224, where the range of control is from 250 to 500 F.P.M., to be typical. For air-compressors with self-closing valves, as in Figs. 222 and 223, having a stroke from 12″ to 30″, the piston-speed ranges from 320 to 400 or 450. In larger machines with mechanically-moved valves, the speeds can be much greater, running up to 600 or 700 F.P.M.

In large power-house engines with positive valve-gear, as typified by Fig. 218, the piston-speed rises to 900 F.P.M.: and this is about the limit for stationary engines. Where space and weight are not the most exacting conditions, it will generally pay better to get a machine which will not have to be worked quite up to the limit.

In transportation service, both marine and locomotive, the conditions just named are, however, of primary importance. Slow freight steamers with low power have piston-speeds from 500 to 700: but in large passenger steamers and in warships at full speed the pistons travel 900 to 1000 F.P.M: typical cases being, 60″ stroke by 90 to 100 R.P.M., 72″ by 80 R.P.M., for large liners; and 39″×160, 42″×145, 48″×120, for cruisers and battleships. In torpedo-boat destroyers the piston-speed runs up to 1200 F.P.M., 18″ stroke by 400 R.P.M. being a very common size. The greatest speeds are formed in the locomotive: in usual working the piston travels from 500 to 1200 F.P.M., according to the class of service; but in the very fastest running, with high-speed locomotives of usual proportions at from 70 to 75 miles per hour, the piston-speed

Digitized by Google

rises above 1400 F.P.M. Thus the locomotive in Fig. 231 has made 45 miles in 37 minutes, or 73 miles per hour, hauling its usual train; with 76″ drivers, this gives 323 R.P.M; and with 26″ stroke, the piston-speed is just 1400 ft.

§ 42. The Framework of the Engine.

(*a*) THE COMPACT, HIGH-SPEED TYPE.—The bed of one center-crank engine is quite fully shown in Figs. 2 to 5; another is given in Fig. 237; and a third, of the side-crank type, in Fig. 238, which is supplemented by Fig. 263: with these three examples, the class is very sufficiently represented. To a large degree, the drawings are expected to speak for themselves; but it may be well to call attention to some points of resemblance and of difference in the designs, so as to suggest the requirements that must be met, and illustrate the manner in which they are satisfied.

In each case, the engine-bed is to rest upon a cast-iron sub-base; its bottom outline is therefore given a simple rectangular shape, except where it swells out under the bearings; this latter effect being relatively greater in the side-crank design, where the main base is narrow.

As to the manner of fastening the cylinder, we have two cases of inside bolts, one of outside bolts. In these engines, as always, the agreement of the axis of the cylinder with that of the bed is determined, not by the bolts, but by a projection on one piece which fits neatly into a recess in the other—whether the projection be a shoulder on the cylinder-head as in Fig. 237, or be at the stuffing-box as in Figs. 3 and 263. In good construction, the bolts never act as dowel-pins, do not have to be accurately fitted, and are not subject to shear.

At the guides our three examples show three typical forms, suited to different types of cross-head. Fig. 237 has four-bar guides, for a wing cross-head, shown in detail by Fig. 298. Figs. 3 and 4 show a broad flat surface for a slipper cross-head, formed right on the main casting, with side-bars to keep the cross-head from lifting. In Fig. 238 the guides are bored, to receive a cross-head of the block or box type.

Digitized by Google

In Figs. 3 and 238 the bottom of the casting forms the lower guide, then slopes toward the crank-space and toward the cylinder-connection, with, of course, very considerable differences in detail.

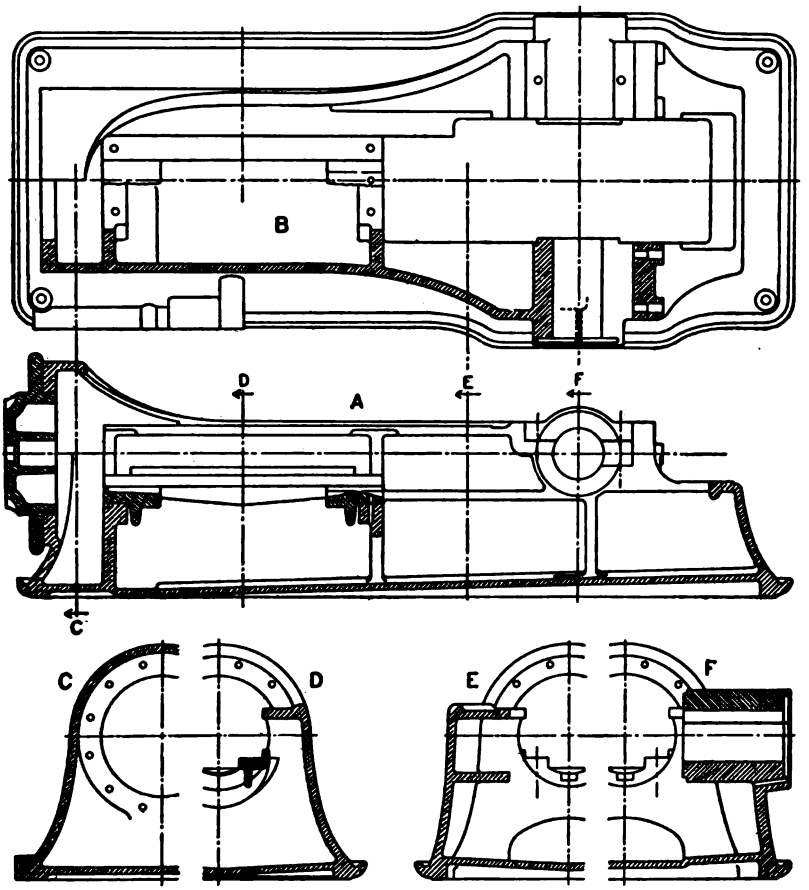

FIG. 237.—Bed of 15″ by 14″ American-Ball Engine, Fig. 201. Scale 1 to 24.

Fig. 237 shows another shape altogether, the bed being closed at the bottom by a nearly flat floor. With any stationary engine, it is highly important that oil from the machine be not allowed to soak into the foundation; in the type under discussion, whether

Digitized by Google

horizontal or vertical, the bed-casting is made so as to catch contain all oil, even to the extent of adding outside troughs a Fig. 237 and at the bearing on Fig. 238. With many eng

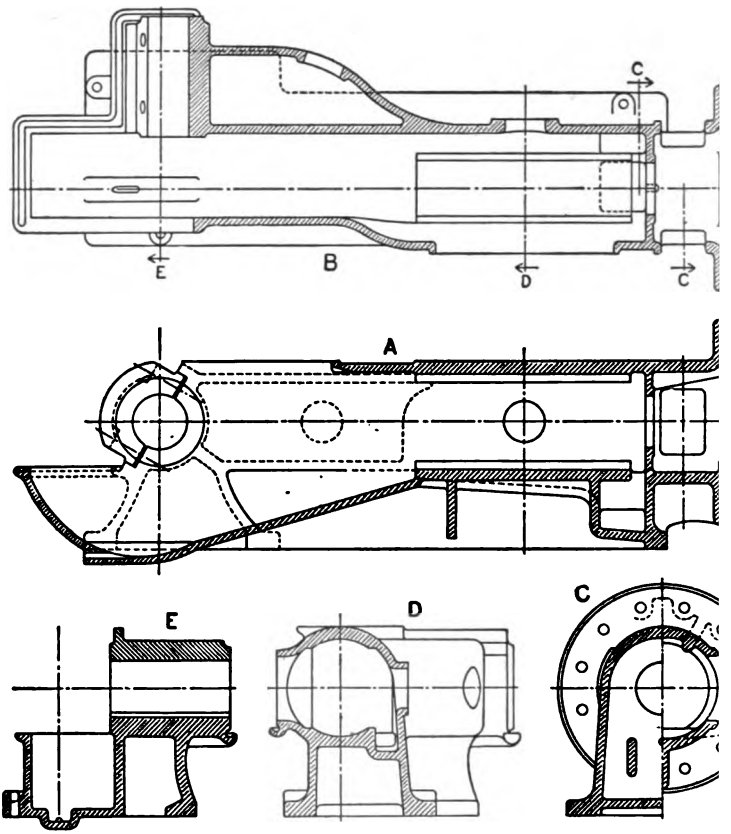

FIG. 238.—Bed of 16′ by 16″ Fleming Four-valve Engine, Fig. 21 Scale 1 to 24.

of the more open type, sheet-metal troughs and floor-guards necessary.

The oil-catching spaces are always provided with drains f their lowest points. Note in Fig. 3 how an oil-reservoir is for in the sub-base at the bearing end. Aside from the need of a

Digitized by Google

tition between the main enclosed space and the chamber in front of the stuffing-box when splash lubrication is used as in Fig. 238, there is good reason for the same separation with jet-lubrication as in Fig. 237; because the water dripping from the stuffing-box ought not to be allowed to mix with the oil from the bearings, especially when this oil is kept in rapid circulation by an oil-pump. The form of the guards or shields which enclose the working parts can be seen upon, or inferred from, the general illustrations.

The remaining part of importance is the bearings. These are to be considered in detail when the shaft is taken up. For the present it is enough to remark that the Ames engine has a cast-iron bushing, all in one piece, and lined with babbitt: the other two have plainer, solid bearings, with babbitt lining of course; but we note the typical difference between the arrangement with a top cap and adjustable quarter-box in Fig. 237, and that where the bearing is divided almost at right angles to the principal line of stress, in Fig. 238. In the latter case, adjustment can be made, if needed, by using liners or shims beneath the cap at the joint, and removing them when wear must be taken up.

Bosses or seatings for the support of the valve-gear are placed on the engine-bed as needed, without affecting the general lines of its design.

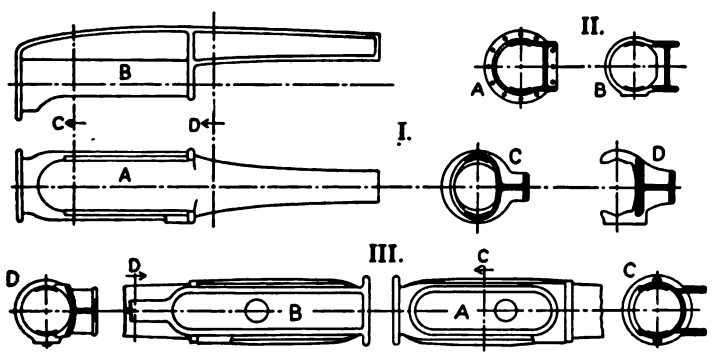

FIG. 239.—Various Girder-frames for Corliss Engines. Scale about 1 to 96.

(*b*) CORLISS ENGINE-BEDS.—The older type of open girder-bed is illustrated in several forms in Fig. 239: I. has the common T-

Digitized by Google

bar section, as shown especially at D; that is, it has the fla stiffening rib, as in Fig. 210; II. is a less usual form, wit I-beam cross-section; while in III. the stiffening rib is r double back of the guides, or something like a box-girder is u used. The relation between the several views of I. is indic by the cross-lines and arrows; in II. only the cross-sections A B are given, and these correspond with C and D of I.; in II is the front view. We have here one example of V guides, another in Fig. 240; with bored guides on one of these girder frames, it is quite usual partly to enclose the guides as in by running a half-ring from one to the other at the front

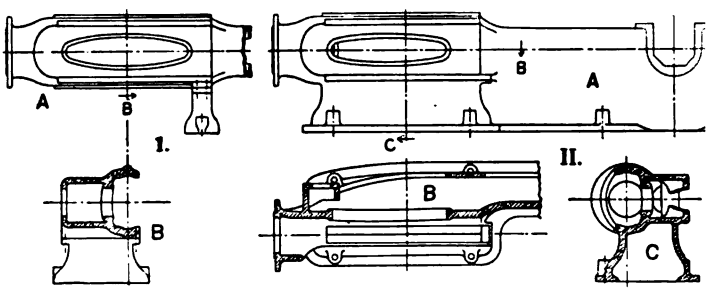

FIG. 240.—An Instance of Evolution: the Bates-Corliss Engine.

An interesting example of development from the older gu bed to the now prevalent full-base type is given in Fig. 240: shows the cross-section of the box-girder, which is essentially same in both designs, and is further brought by II. B: I perhaps even better than A, shows how the full base is develo by a simple and harmonious addition to the original design.

Fig. 241 is given with the intention of bringing out very the form of the casting, showing all the hollow parts and form and location of the internal stiffening-ribs. The most i cate coring work is at the collar around the front end of the gu where the cross-section C is taken. It is of interest to note the main web marked W is continuous, and almost straight, f the main-bearing to the cylinder-seating. The hole back of guides, at section B—as likewise in Fig. 239 III.—is for the pose of getting at the inner end of the wrist-pin, when it is t

Digitized by Google

removed from the cross-head. A detail of the bearings of this engine will be found in § 45, at Fig. 320.

(c) VERTICAL STATIONARY ENGINES.—Only one frame of this type is illustrated in detail, because so much can be seen by, or inferred from, the external view, as in Figs. 218, 219, 224, etc. The fact that the function of carrying the engine is taken by the bed-plate—the supporting forces acting in the same line as the working forces—makes the casting simpler than in a horizontal engine. The example given in Fig. 242 is rather more complex

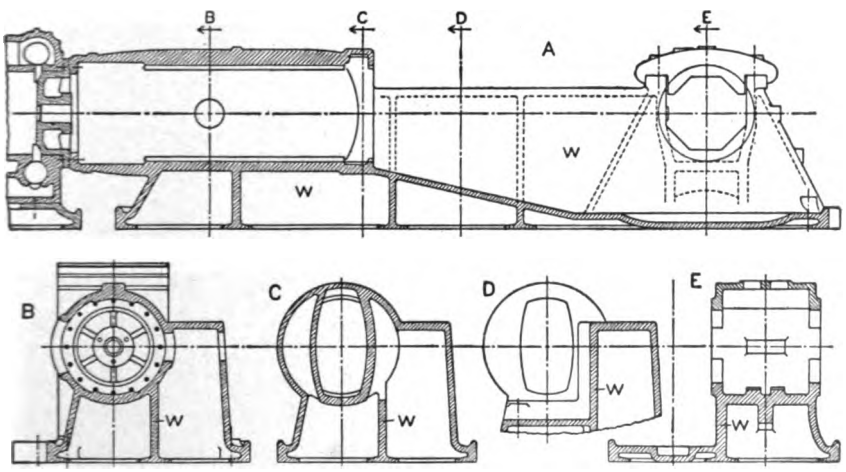

FIG. 241.—Frame of 26″ by 48″ Murray-Corliss Engine, Fig. 218. Scale 1 to 60.

than usual, the frame consisting of three pieces, above the bed-plate. The following description will supplement the drawing:

This engine-frame, of the very usual A-shaped form in its general outline, is made up of two principal parts, the housing 1 and the guide-barrel 2: further, the housing is here made in two pieces, bolted together above the crank-arch. The advantage of this construction is, that one of these halves can be removed, making it a very easy matter to take out the shaft; the other half being sufficient to carry the mere weight of the engine, which is small in comparison with the steam-forces. View CDEF bears

Digitized by Google

an important part in showing the detail of the housing, w
GHJK serves a like purpose for the guide-barrel. The la

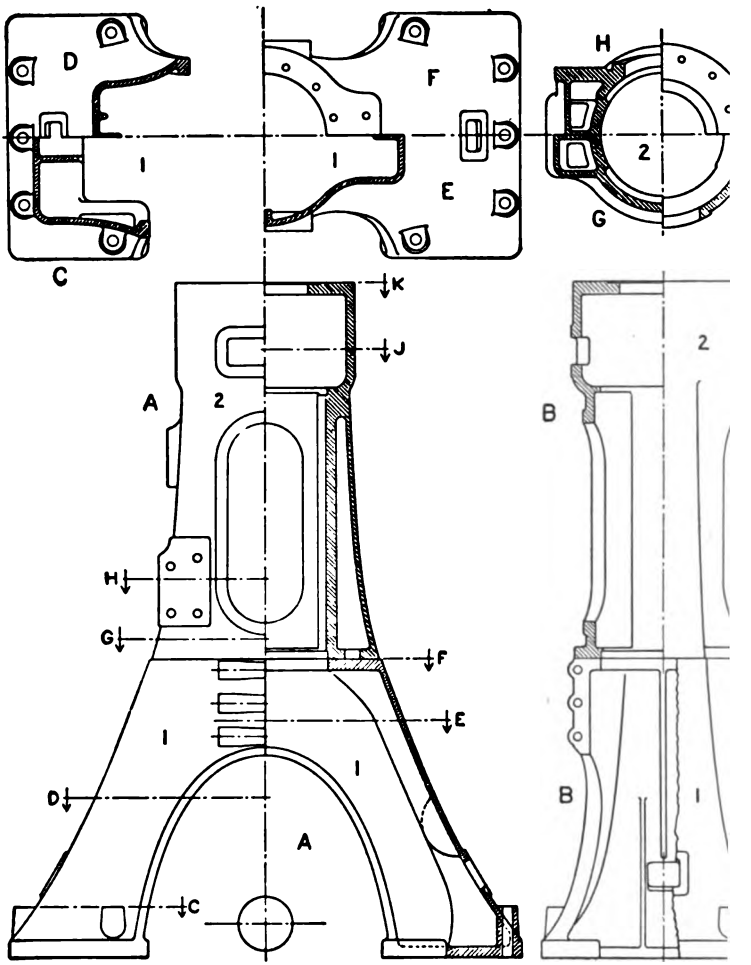

FIG. 242.—Frame of Vertical Cross-compound Buckeye Engine, 22" and by 27": see Fig. 217. Scale 1 to 36.

piece is somewhat complicated by the cored-out hollows in bracing-ribs back of the guides: otherwise it is a simple, strai

Digitized by Google

forward casting. The only detail omitted in this drawing is certain lugs which are formed upon the casting to support the platforms or galleries seen on Fig. 217.

The bed-plate of this or any other vertical stationary engine is a comparatively simple piece. It is, or should be, always made with a bottom-web running under the crank-pit, so as to keep oil and water off the foundation. The photographic views already given show clearly wherein it differs from the marine-engine bed-plate, which is now to be further illustrated by drawings.

(*d*) FRAMES OF MARINE ENGINES.—The first example, Fig. 243, is from a smaller engine of the same general type as Fig. 235; and the cylinders of this engine are further illustrated in Figs. 259 and 260. View A takes in only one division of the frame, that which supports the high-pressure cylinder, and gives also a half-section of the cylinder; while B includes a section through the valve-chamber. The cylinder-arrangement is given in Fig. 259, which shows how the three cylinders are flanged and bolted together. In large engines, however, the cylinders are not thus rigidly connected, because their expansion when heated would throw the stroke-lines out of parallel, and because the cylinders would be subjected to awkward stresses. Constant distances between the cylinder-axes are preserved either by longitudinal struts bolted between the frames at the top, as in Figs. 232 and 233; or by having tie-rods which take hold of stout lugs on the cylinders, as in Figs. 234 and 235. The bed-plate, Fig. 243 C, is of cast steel, and the section belonging to one cylinder, with its two shaft-bearings, is cast in one piece.

An interesting example of the frequently used composite frame —cast housings at the back, steel columns in front—is given in Fig. 244. The cranks are arranged very nearly as in Case B, Figs. 183 and 185; and further, in order to diminish the free turning or tipping moment, the two cylinders at each end are crowded as close together as possible. This throws two sets of valves together in the middle, and separates the two end groups by the full distance needed for these valve-chambers—giving the layout seen in Fig. 244 C. Each pair of cylinders is supported by two cast-iron Y columns and three steel columns; of the latter,

Digitized by Google

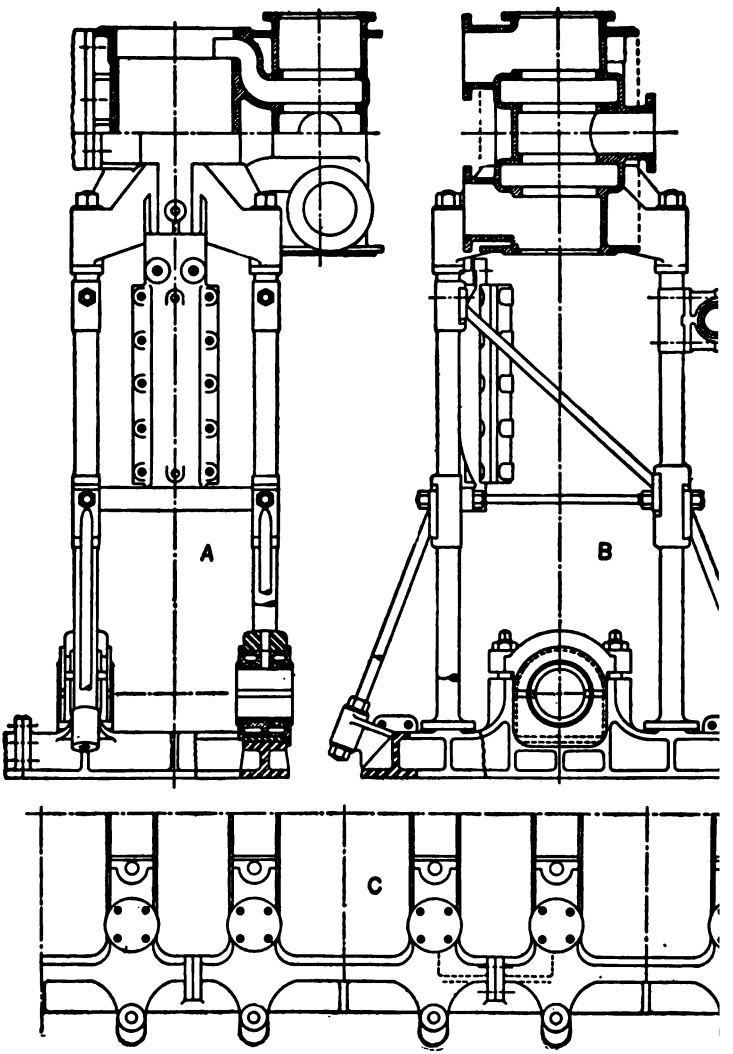

FIG. 243.—Frame of Gunboat Engine, U. S. Navy; see also Fig. 25
Scale 1 to 24.

Digitized by Google

the one in the middle (at the left in A) is heavier than the others, and is also made taller so as more conveniently to support the short brackets on the crowded sides of the cylinders. It is here

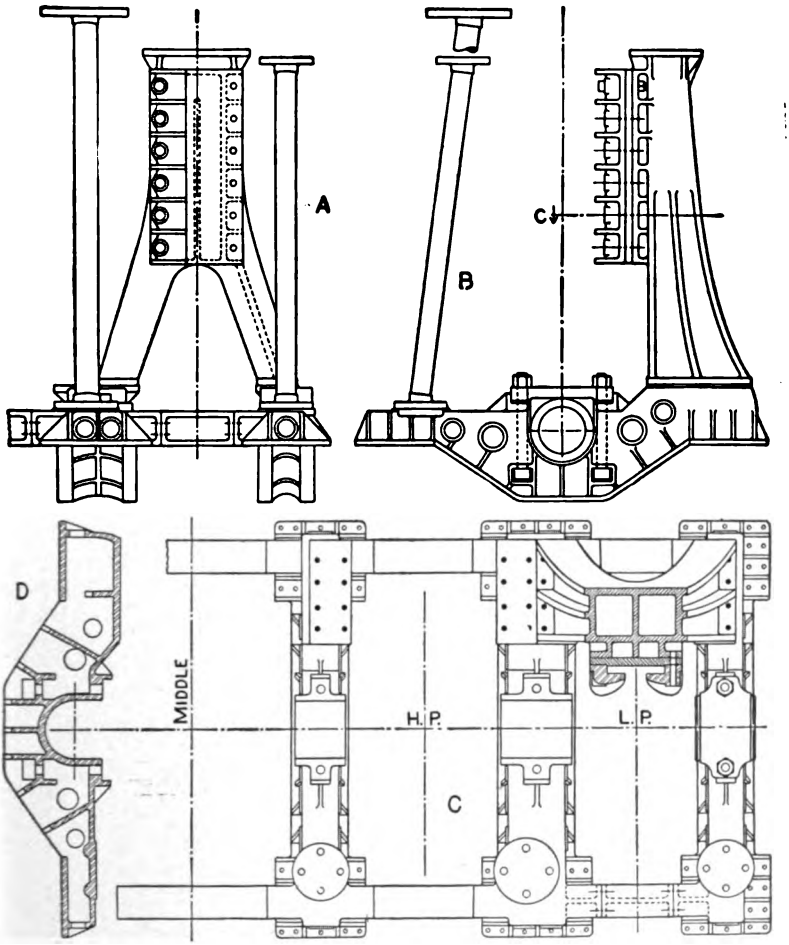

FIG. 244.—Frame of Engine for British Battleship "Triumph"; four-cylinder triple-expansion, 29", 47", 54" and 54" by 39". *Engineering*, 1904, I., page 90. Scale about 1 to 56.

evidently considered easier to machine the end-flanges oblique to the shanks of the columns than to plane the seatings exactly at

Digitized by Google

a certain angle on the bed-plate and cylinders. Minor c
in the way of enlargements upon these front columns, to su
secondary parts of the machine, are in this drawing omitt

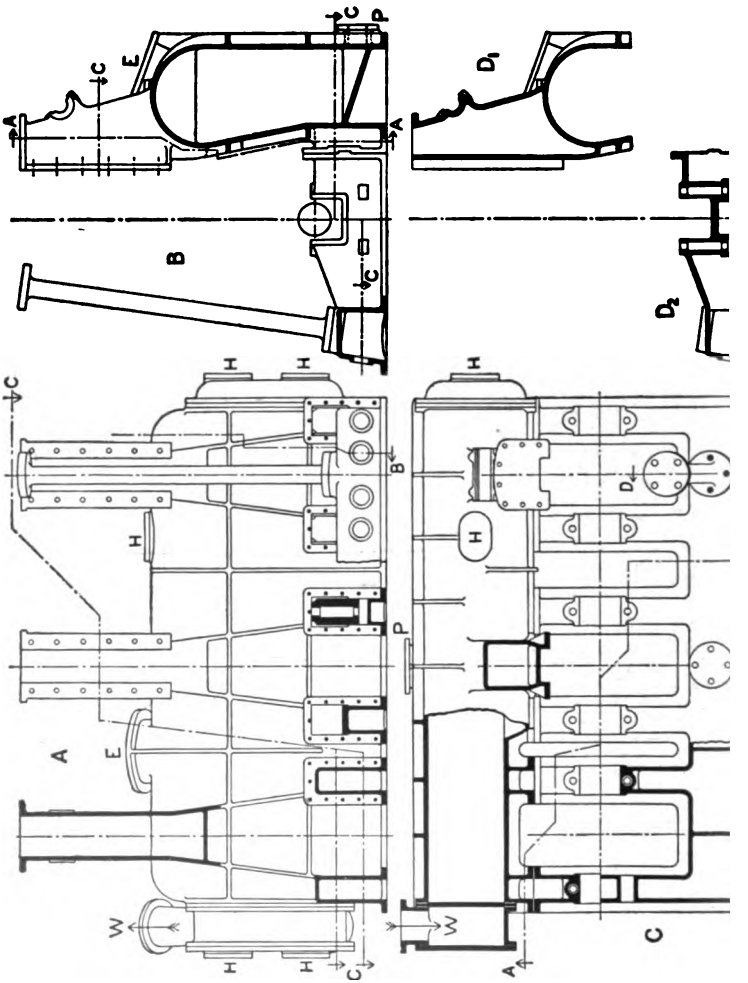

non-essential. As to the bed-plate, each main-bearing fra
a separate piece; and the use of short distance-pieces mak
number of joints in the longitudinal connections rather larg

Digitized by Google

that this engine must depend, for rigidity, very much upon the foundation which is built into the framework of the ship. Fig. 244 is, in this respect, not representative of usual practice: much stronger frames of the same general type are seen in Figs. 234 and 235; while the deep bed-plates in Figs. 232 and 233 are even more rigid.

Fig. 245 shows the frame of a moderate-sized triple-expansion engine for a small passenger steamer, the most striking feature being the incorporation of the condenser-body into the engine-frame—an arrangement frequently used in the smaller and slower merchant steamers. This whole frame is of cast iron, except the single steel front column under each cylinder; and here the main bed-plate is all in one piece, fastened to the condenser with six flanged joints. The scale is too small for showing details of the bearings and of the condenser: on the latter are indicated, however, the exhaust-inlet at E, the air-pump connection at P, the water-connections W, W, and several hand-holes marked H. For the rest, the detail of the casting is quite clearly given by the sectional views.

(*e*) Locomotive Framework.—This type of construction is sufficiently represented by the example in Fig. 246, which is of simple form, with no special or peculiar features. The engine-cylinders are each cast in one piece with half of the saddle 2, as best seen at C and D; in A the cylinder in the foreground is cut away, and we see a section of the neck between cylinder and saddle, with the passages marked, S for live steam, E for exhaust. The "frames" proper, 3, 4, are forgings made by welding together heavy wrought-iron bars, though the use of steel castings for these parts is becoming more and more prevalent. The front frame 3 is securely bolted to the saddle, besides being held by shoulders upon the bar; and is fastened to the main frame 4 by a strong splice. Piece 4 contains the "jaws" for the axle-boxes, with panels between them, each jaw being closed at the bottom by a pedestal-brace of the bolt-and-thimble form. A "ten-wheel" locomotive has three driving-axles; the place for one of these is cut out in the figure, on account of limitations of space.

Without going into a description of the cross-framing and the

Digitized by Google

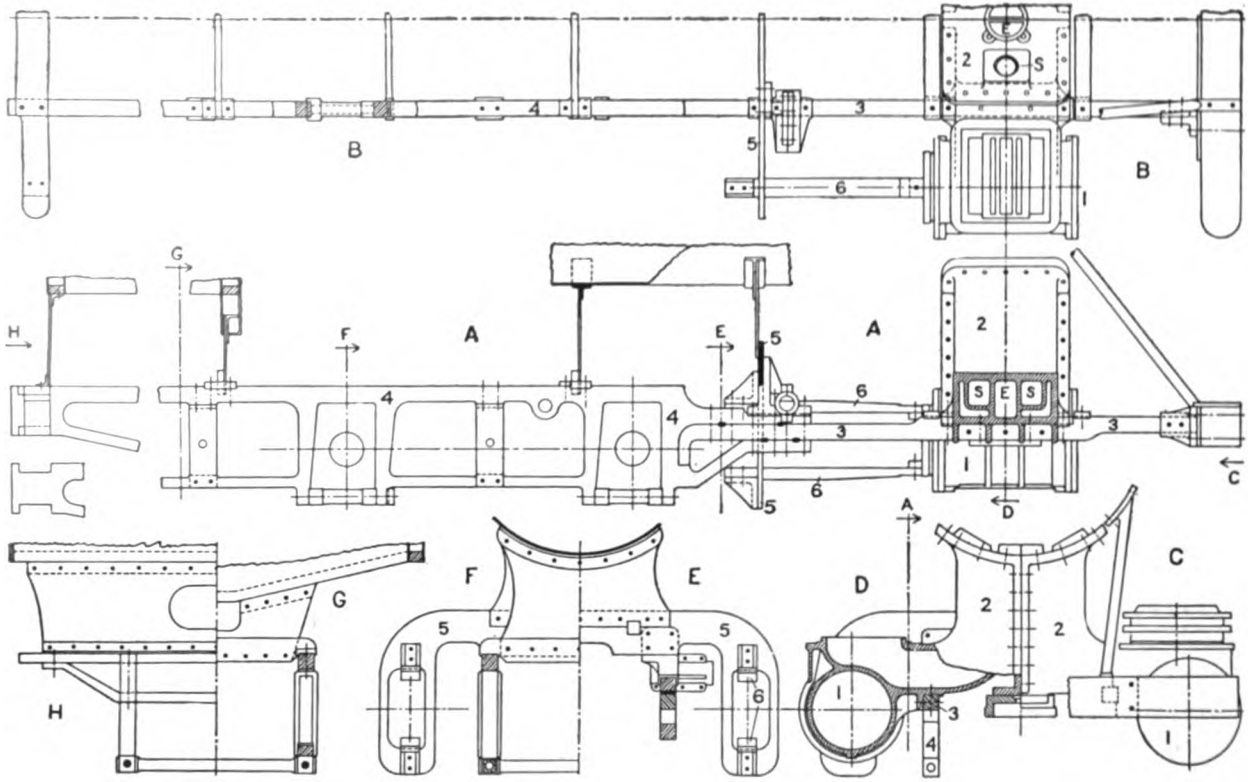

FIG. 246.—Frame and Cylinders of Simple Locomotive, "Ten-wheel" type. Scale 1 to 48.

1. Cylinder. 2. Saddle. 3. Front frame. 4. Main frame. 5. Guide-yoke. 6. Guide-bars.

Digitized by Google

boiler-support, which are clearly indicated, we have the framework belonging to the engine proper completed by the guide-yoke 5 and the guide-bars 6; the latter being carried by the cylinder-head at their front end, as can be seen also in Figs. 247 and 256. The small bearing which rests upon the frame just in front of the guide-yoke is for the rocker-arm, a part of the valve-gear.

§ 43. The Cylinder.

(*a*) THE CYLINDER OF A SIMPLE LOCOMOTIVE of moderate size is very fully illustrated by the sectional views in Figs. 247 and 248. There are several reasons why this particular type is chosen for detailed description: its general form is simple, even though some complication is introduced by the connection to the body of the saddle-casting; in the main view it is almost entirely clear of the framework; and especially, as regards the short slide-valve and the long steam-passages, it is the extreme type in one direction, with the cylinder having separate valves and short ports as the other extreme.

The cylinder-body 1 is a continuous shell, except where the steam-ports 9, 9, cut through it; and around each end there is a stout flange to which the cylinder-heads 3 and 4 are fastened with stud-bolts. That part of the inside surface along which the piston slides is called the "bore" of the cylinder: at the ends it is counter-bored a little larger (from $\frac{1}{8}''$ to $\frac{1}{4}''$ in diameter). This is done partly to facilitate re-boring when worn, partly in order that the piston may not wear the rubbing surface to a shoulder at the end of the stroke—the edge of the packing-ring slightly over-travelling the end of the bore. The heads, shallower than in any of the designs which follow, extend into the counterbore, and are stiffened with radial ribs on the outside. The back head carries the stuffing-box—of special form in that it is to contain metallic packing—and a stout flange for supporting the guide-bars, as already shown on Fig. 246. The piston is of simple cast-iron box form, and calls for no comment at this point.

(*b*) DETAIL OF THE CASTING.—Turning from the cylinder proper to the valve-chest and steam-passages, and to the portion

Digitized by Google

of the casting which joins the cylinder to the saddle, we encou
much more complicated shapes. This rather intricate part
the casting will now be fully described, not only on account o
importance as a type of design, but also because its very comple

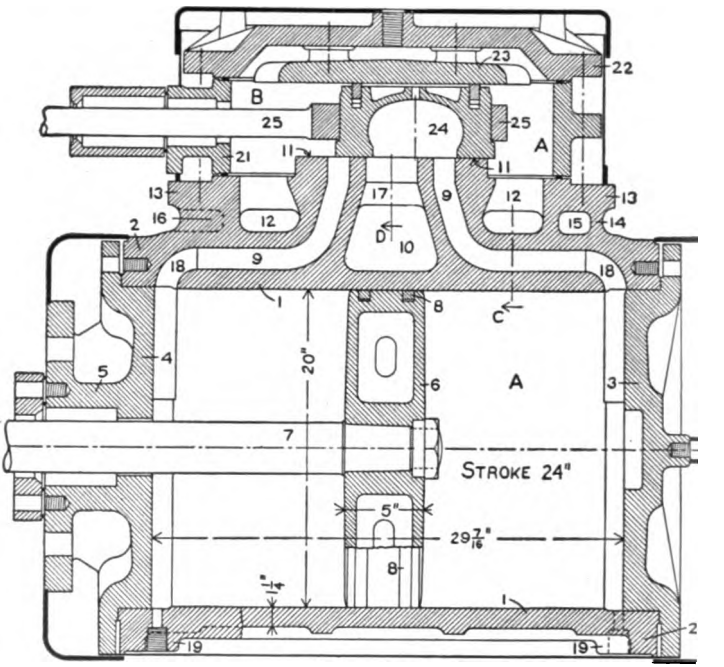

FIG. 247.—Lengthwise Section of a Locomotive Cylinder, 20" diamet
by 24" stroke. Scale 1 to 12.

1 to 8. Main Outline of Cylinder.

1. Cylinder body or barrel.
2. Cylinder flanges.
3. Front cylinder-head.
4. Back cylinder-head.
5. Stuffing-box.
6. Piston.
7. Piston-rod.
8. Packing-rings.

9 to 13. Steam-passages.

9. Steam-ports.
10. Exhaust-port.
11. Valve-seat.
12. Steam-inlet.
13. Valve-chest ba

entails some excellent practice in reading drawings and in ap
ciating the essential form of a casting which has to fulfil ce
requirements.

The bottom of the steam-chest is a flat, rectangular t

Digitized by Google

through which open the steam-passages; and in the space between this table and the cylinder-shell are formed the walls of these passages. The steam-ports 9, 9, and the exhaust-port 10 come up to the raised valve-seat 11. The steam-pipe, coming down

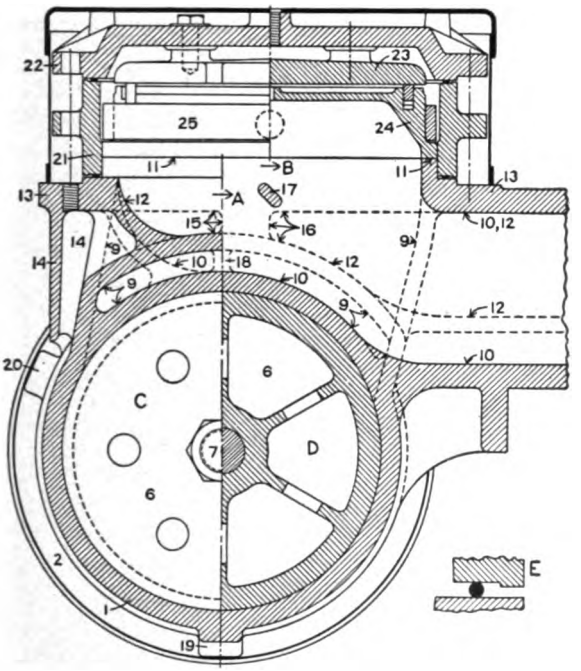

FIG. 248.—Cross-section of Cylinder in Fig. 247.

14 to 20. Details of Cylinder-casting.
14. Apron.
15, 16. Hollows around steam-passages.
17, 18. Stiffening-struts across ports.
19. Drip-cock taps.
20. Indicator taps.

21 to 25. Valve-chest and valve.
21. Valve-chest casting.
22. Valve-chest cover.
23. Balance-plate.
24. Valve.
25. Valve-yoke and rod.

through the saddle (see Fig. 246 and Fig. 257), forks into the two steam-inlets 12, 12, which open into the steam-chest at each end of the valve-seat. In Fig. 248 the profiles of the different ports are indicated by repeating these numbers, and marking with arrow-heads the lines to which they refer. The steam-

Digitized by Google

ports drop down between slanting plane walls, then curve arou and are fitted to the outer surface of the cylinder, until they g to the ends and turn in—being of nearly constant width. T exhaust-port is bounded by easy curves as it drops down to t surface of the cylinder, then runs off into the saddle; and t steam-inlets are of similar shape, but are above the outer wa of the steam-ports.

To keep the metal around these various cavities uniform thickness, a number of pockets must be formed in the exter surface of the casting. Inside the apron 14, which at the en bends around to join the cylinder-flanges, there is, in the midd a pocket coming to the wall of the exhaust-port 10; then t steam-port walls, coming down straight, and connected to t apron by ribs which stiffen the latter; next, shallow pockets the steam-inlet walls; and last, at the ends, deep pockets which run in as far as the central plane of the cylinder. T minimum section of the space 15 is shown on Fig. 247, at t right; at the left is given the outline of a similar space 16 at t back of the cylinder, but which is not closed in like 15. To stiff the port-walls, the stud 17 is cast in the exhaust-port, set at a angle so as to obstruct the passage as little as possible; and sin lar cross-studs 18, 18, tie the flanges to the cylinder-body near t middle of each steam-port opening.

Other details, external, are, the stout rib along the botto of the cylinder; the enlargement of the outer diameter at t counterbores, with two shallow ribs running around the cylinde and the taps for the cylinder-drains and the indicator pipes, 19 and 20. The form of the saddle-casting just back of t cylinder is sufficiently shown on Fig. 246.

(*c*) VALVE-CHEST AND VALVE.—The steam-chest 21 is a rectan ular box, with a stiffening-rib all around it and the valve-r stuffing-box at one end. The cover 22 is a separate piece, a one set of stud-bolts tightens up both joints. The device f making these steam-tight is shown in detail at E, Fig. 248; rectangular "ring" of heavy copper wire, soldered at the corne is placed between the cast-iron surfaces; when the bolts a screwed up the wire is squeezed flat, and the ledge on the stea

Digitized by Google

chest keeps this gasket from blowing out. The same kind of packing is used at the stuffing-box covers. The cylinder-heads, however, have "ground" joints, and need no packing.

Beneath the steam-chest cover is bolted the balance-plate 23, whose lower surface is a true plane, parallel to the valve-seat. The valve is a simple D valve, short and wide, and the valve-yoke 25 goes clear around it, as shown by the top view in Fig. 249. This view also makes clear the manner in which the

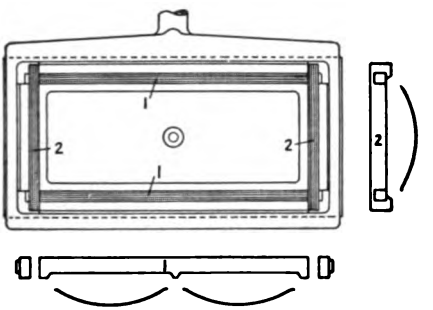

FIG. 249.—Plan of Valve and Valve-yoke in preceding figures.

balance-strips, shaded for emphasis, shut off steam from the greater part of the top of the valve. In this design—the Richardson balanced valve—there are four straight strips, fitted neatly into the grooves in the valve, and touching each other closely at the corners; the end strips 2 having lugs to keep them in place. Under the strips are light springs; but they are pressed up against the balance-plate chiefly by the steam, which has free access to their under side. Note the small vent-hole, connecting this relieved space with the exhaust-port.

(*d*) VARIOUS ENGINE-CYLINDERS.—The drawings which follow, Figs. 250 to 273, show a number of different steam-cylinders, more or less in detail, for the purpose of bringing out the important variations in arrangement and construction. In first running over these, we shall note the more striking features of each design; then, after all the examples have been presented, some of the more important details will be systematically reviewed. It is self-suggestive that there are two principal points of view from which

Digitized by Google

the cylinder may be regarded: on one side is the function of wo performance, involving the action of forces, and presenting qu tions of strength, tightness, durability, and convenience of acce on the other side is the function of steam-distribution. The wo ing element, the "cylinder" proper, shows only secondary va tions in the form of its parts, however important these differen may be from the point of view of the constructor: but in the fo and arrangement of the valve (or valves) and of the steam-passa there is a wide variety. Note that of the two elements of the stea distribution, form and movement, we are now concerned w the first only, except in the most general way; and the vari valves shown can be more fully understood, in their detail proportions, after the action of the valve-gear has been studi in the next chapter.

(*e*) DIFFERENT VALVE-ARRANGEMENTS.—Analyzing the ste distribution, as already described in Chapter I., we note that valve in an ordinary double-acting engine has to perform f functions, namely, to admit steam to each end of the cylinder permit exhaust from each end. The common D valve, with e of its four edges controlling one of these operations, may well called a four-function valve. In many cases, the functions separated, two double-function valves, or four single-funct valves, being used. Of the latter arrangement, the Corliss eng is the most prominent example.

(*f*) ENGINES WITH SEPARATE SLIDE-VALVES.—The exan given in Fig. 250 is typical of a number of designs. With its f short ports and separate valves, it contrasts very strongly v the locomotive cylinder in Fig. 247. Structurally, this eng has four valves; kinematically—that is, as regards movemer there are two valves, one for the two admissions, the other the two exhausts. Right here a distinction can be drawn betw separate valves and a separated valve. When a plain or pa balanced D valve is used, as in Fig. 247, it is made as shor possible, in order that there shall be the minimum of area u which the steam-pressure may act to force the valve hard d upon its seat and produce friction. When the valve is fully anced, as in the Sweet design, shown in Fig. 6, it is made lon

Digitized by Google

or the working-faces are separated, so as to get short ports. Complete evolution in this direction is shown in Fig. 250, where the valve is divided into two separate parts, connected only by the valve-rod which moves them. If now these two valves are separately driven, as in the Porter-Allen engine, we have what may strictly be called separate valves. The Porter-Allen, one of the earliest-developed good high-speed engines, is not here illustrated: but the valve-gear is shown in outline in § 58, and the general arrangement of the cylinder is very much as in Fig. 250.

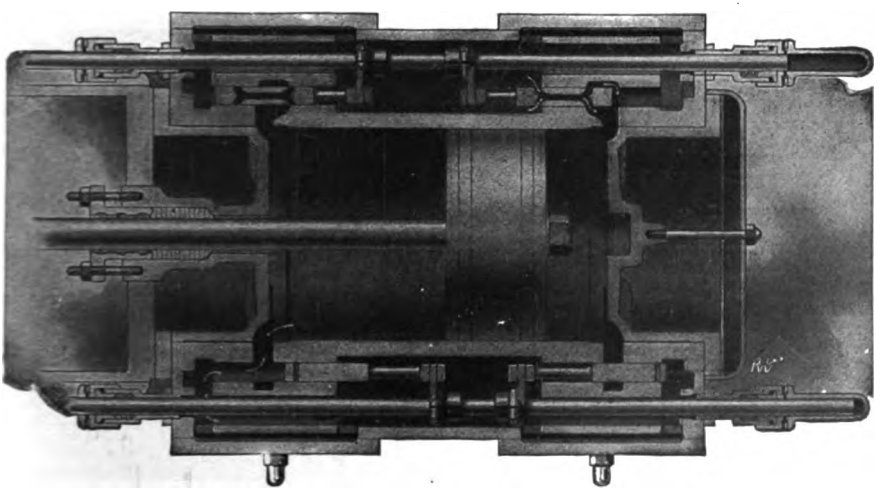

FIG. 250.—Cylinder of Watertown Four-valve Engine.

A noticeable feature of this cylinder is the great depth of the heads, which is rendered necessary by the requirement of the steam-chest space well beyond the ports. In regard to the balancing of the valves, we see that the balance-plates on the exhaust side must be held in place mechanically, against the distance-strips which just leave the valve room to move; whereas the balance-plates on the admission-valves are held up by the steam-pressure, like the single plate in Fig. 6. Further, each exhaust-valve has two or three slots cut through it (rather than the single one shown in this illustration), in order that the steam-pressure shall always be equalized on the two sides of the valve,

Digitized by Google

or that the pressure of the steam in the cylinder shall not the valve hard against the balance-plate.

(*g*) THE DOUBLE-FACED FLAT VALVE.—The cylinder of engine illustrated in Figs. 201 and 237 is shown in detail by 251, with especial emphasis on the valve and steam-ports.

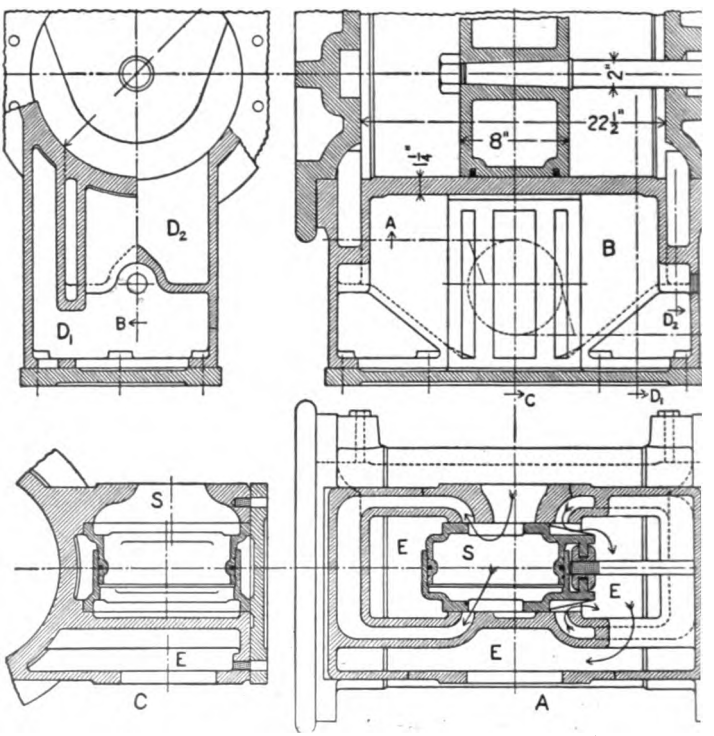

FIG. 251.—Cylinder of 15" by 14" American-Ball Engine; see Figs. 2 237. Scale 1 to 14.

this Ball design there are two parallel valve-seats, just with the extensible valve between them. Each half of the has the usual working-face of a common D valve; and the are connected by a sliding cylindrical joint, telescopic in its and with grooves and a packing-ring to prevent leakage. valve differs from those in Figs. 6 and 247 in that the live

Digitized by Google

is at the middle, while the exhaust takes place past the outer edges of the valve. This interchange of function does not affect the steam distribution at all; its effect upon the arrangement of the valve-gear will be brought out in the next chapter, where the "balancing" of the valve will also be discussed. Note how the valve-rod is connected to the valve, by a self-adjusting grooved block, free to take the position in which there will be no bending effect upon the rod.

This horizontal position of the valve, in a plane through the cylinder-axis, makes the ports long, so that the engine is bound to have a large clearance-volume: but the mere doubling of the

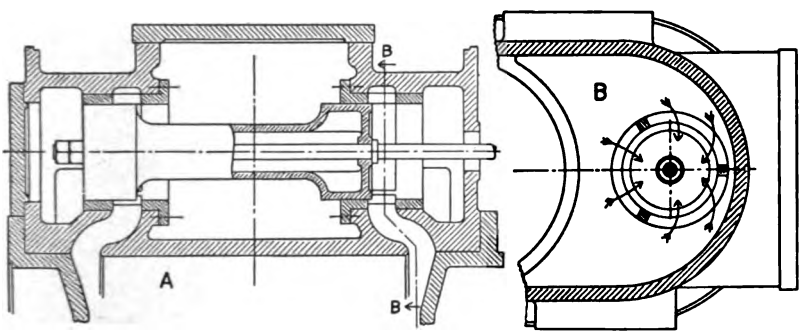

FIG. 252.—Cylinder with Plain Piston-valve. Scale 1 to 12.

ports does not of necessity give them a larger total cross-section than a single passage ought to have. The shape of this part of the casting is so fully shown by the sectional views as to need no explanation.

(*h*) ENGINES WITH PISTON-VALVES.—The first example, in Fig. 252, is of the simplest possible form—a plain, close-fitting plug, without any packing-device. This arrangement has been found quite satisfactory with valves not over six inches in diameter; but it is rather more usual to provide some means of adjustment or some sort of packing-rings even with small valves. The section along the port, at B, is useful in showing how the valve is placed near the back of the semicylindrical steam-chest, in order that

Digitized by Google

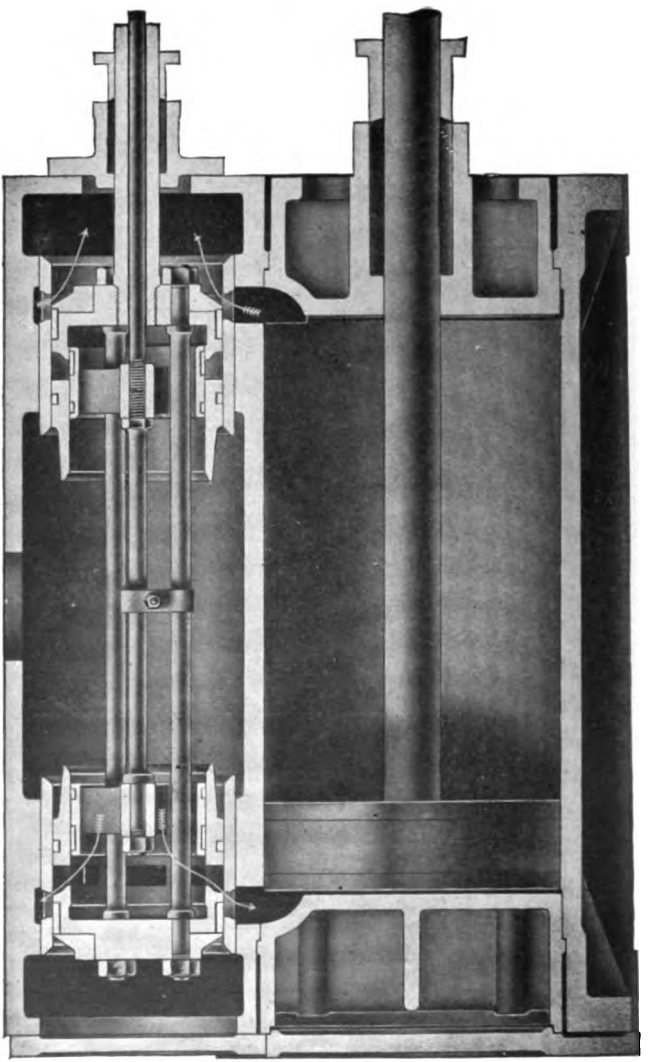

Digitized by Google

the port shall fully and yet closely accommodate the streams flowing in or out all around the valve.

In Fig. 253 is seen a double piston-valve, each valve being in two parts, joined by rods. The inner, secondary valve combines with the outer main valve in controlling the operation of admission of steam into the cylinder; but the exhaust is determined wholly by the main valve. One valve-rod works inside the other, the hollow rod carrying a stuffing-box at its outer end.

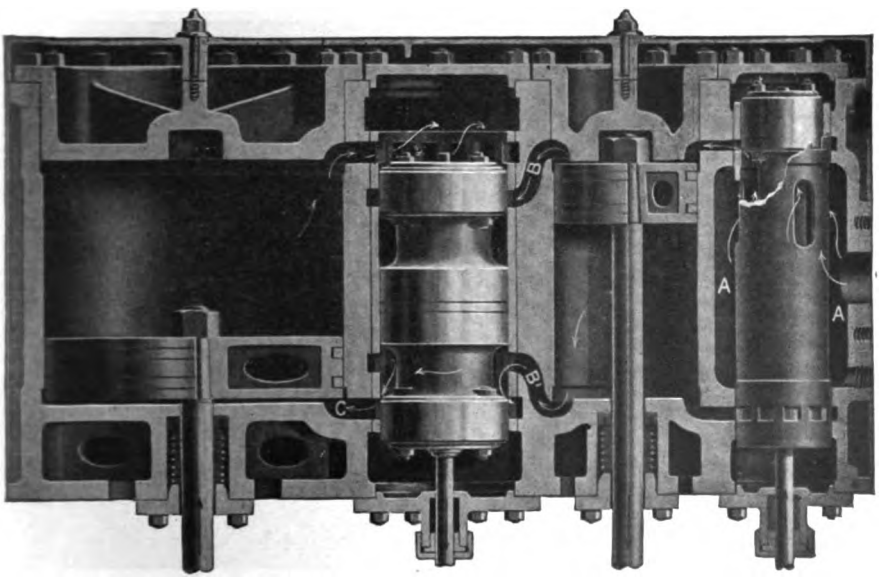

FIG. 254.—Cylinders of Reeves Vertical Compound Engine, Fig. 202

(*i*) HIGH-SPEED COMPOUND ENGINES.—In the very compact engine shown by Fig. 254, the two cylinders and their valve-chambers are cast all in one piece, with the lower cylinder-heads included. The working-faces of the piston-valves are adjustable in diameter. The high-pressure valve, at the right, works inside a full-length bushing, being completely inclosed except for the steam-inlets toward the top; then the space AA forms a very effective steam-separator, within the engine, drained by the outlet at the bottom. The steam-action for the particular position is indicated by arrows,

Digitized by Google

the working of the larger valve being somewhat complicated by the fact that it controls both the exhaust from the high-pressure cylinder and all the functions for the low-pressure.

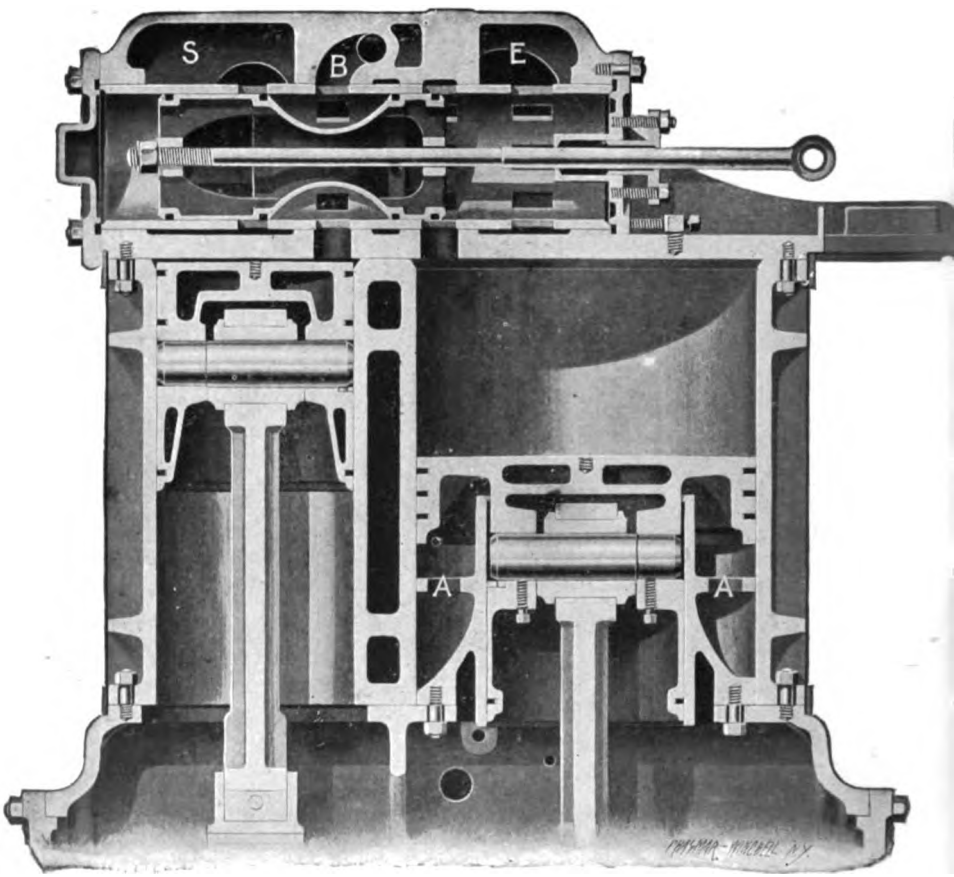

FIG. 255.—Cylinders of Westinghouse Compound Engine, Figs. 207, 208.

The general arrangement of the Westinghouse single-acting engine has already been commented upon under Fig. 208. In Fig. 225 are shown the details of the cylinders, pistons, and valve. Putting the steam-chest on top of the cylinders gives the latter

Digitized by Google

a very simple form. This sectional view makes clear the construction of the combined piston and cross-head. The external form of the valve is rather better shown in Fig. 208; here we see that it is hollow, all of its inner surface being exposed to the exhaust steam. The annular space around the neck of the valve alternately connects the steam-space S to the high-pressure port B, and this port to the low-pressure port; exhaust taking place past the right end of the valve, as in the figure. The valve works inside a continuous bushing, in which all the port-openings can be accurately machined. From B a by-pass valve connects to the steam-space

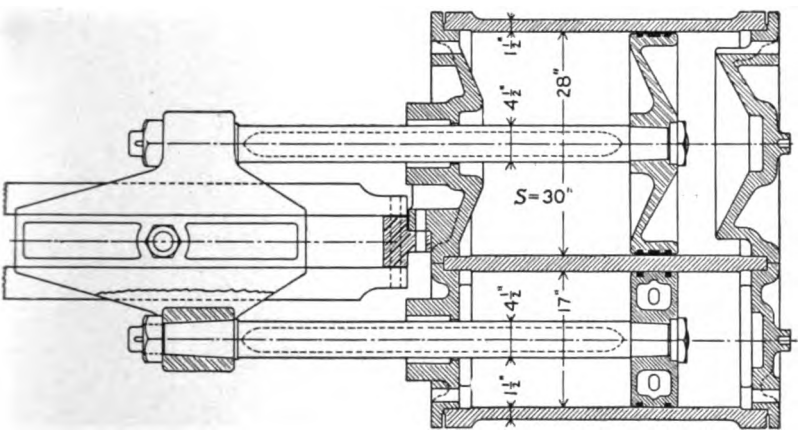

FIG. 256.—Cylinders of Vauclain Compound Locomotive, Baldwin Locomotive Works. Scale 1 to 24.

S; this is worked by hand, and is opened when starting the engine, so as to admit steam directly to the low-pressure cylinder. From the annular space A, about the low-pressure piston-trunk, there is communication to the outer air through a check-valve, which can be held open while the engine is being turned over by hand.

(*j*) THE VAUCLAIN COMPOUND LOCOMOTIVE.—A particularly compact type of the direct-expansion compound engine is illustrated in Figs. 256 to 258. There are a number of interesting features, especially in the form and arrangement of the steam-passages and of the single valve which controls the steam-distribution of both cylinders. Fig. 256 is a vertical section, giving

Digitized by Google

the general arrangement of the cylinders, pistons, and cross-head; note the different kinds of piston used for the different diameters. The details of the casting are shown by Fig. 257; while in Fig. 258 two partial sections, which follow the lines VH and VL in Fig. 257 A, are turned into one plane. According to the notation on the lengthwise sections, 1 or S is the steam-supply passage, 2 is the port to the high-pressure cylinder, and 3 to the low-pressure, and 4 or E is the exhaust-passage. On Fig. 257 A the profiles

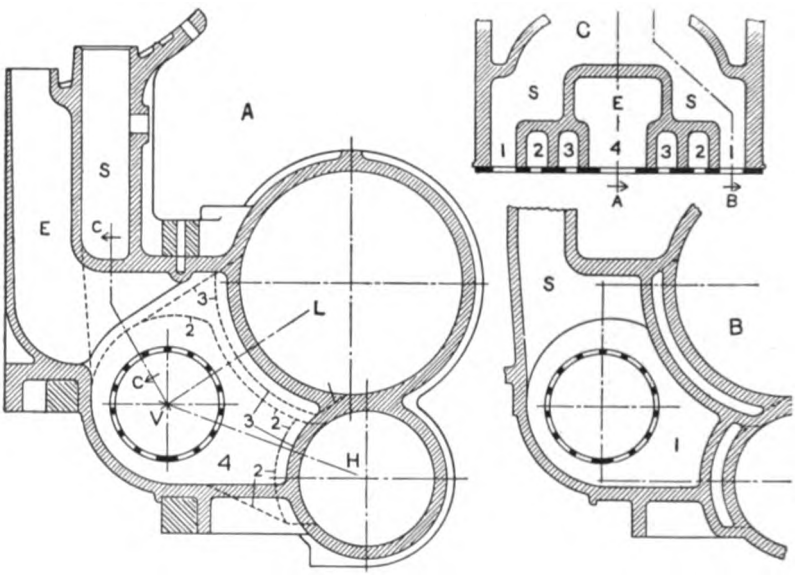

FIG. 257.—Sections of Cylinders and Saddle, Fig. 256. Scale 1 to 24.

of the two ports are shown by dotted lines, each being marked by its number: with the help of Fig. 258 we see that 4 and 3 come down to the walls of both cylinders, 2 is partly outside of 3, and 1 is outside of both ports, 2 and 3.

In this particular example, the two cylinders have not their axes in the same vertical plane, as shown in Fig. 257 A; to diminish the over-all width of the locomotive, the large cylinder is moved in a little from the plane of the engine-mechanism, and the small cylinder is moved out a corresponding amount. Usually, how-

Digitized by Google

ever, the cylinders are placed one directly above the other; the large cylinder being on top in a freight locomotive with small wheels and a low stroke-line, the small cylinder on top when the wheels are large. An idea of the arrangement of the framework, at the saddle, can be got from view A.

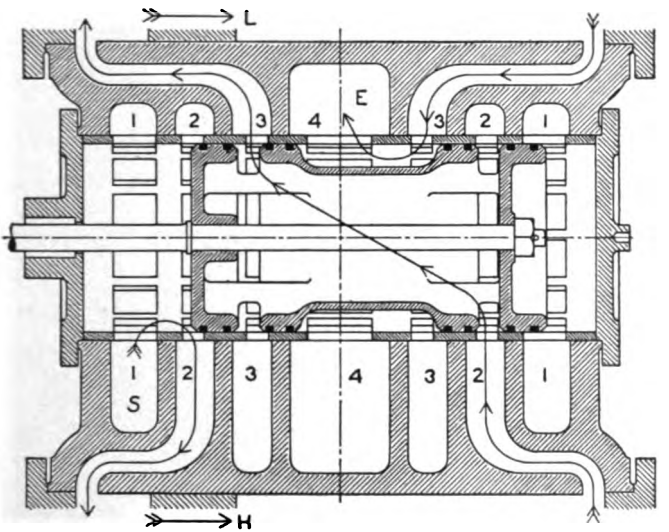

FIG. 258.—Sections through Valve and Ports, Fig. 256. Scale 1 to 13.

The form of the valve is clearly shown in Fig. 258, and the manner in which it controls the steam-action in both cylinders is indicated by the arrows. As with the D valve, the steam is here at the ends, the exhaust in the middle. A complete study of the action of this valve is quite complex—belonging to the subject-matter of Chapter XI. In the face of the saddle, on Fig. 257 A, is seen an outlet from the steam-passage; a by-pass valve connected to this can admit steam directly to the low-pressure cylinder, through the holes in the heads shown near the top of Fig. 256, in order to give extra power in starting the locomotive; but this steam is throttled down from the boiler-pressure, so that it will not exert too great a force upon the large piston.

Digitized by Google

Other cylinder-arrangements which are in the same class with the one just described are illustrated in Figs. 436 to 438.

(*k*) MARINE-ENGINE CYLINDERS.—As typical of this class, the cylinders of a small triple-expansion engine, already partly illustrated in Fig. 243, are fully shown in Figs. 259 and 260, and in Fig. 411. Fig. 259 gives the general arrangement; the lower half of the figure is a section at mid-length, the upper half goes through the top steam-port. The first point to be noted is the manner in which the cylinders are bolted together, so as to form

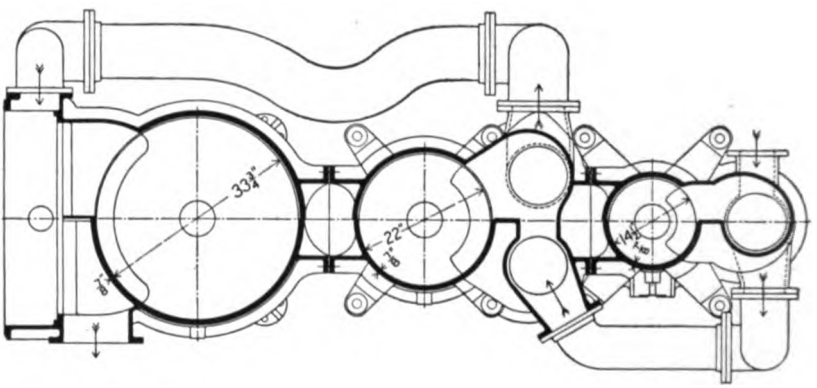

FIG. 259.—Cylinders of Small Triple-expansion Marine Engine; see also Figs. 243, 260, and 411; stroke 18". Scale 1 to 32.

one rigid piece; besides the flanged seatings for this purpose, we see also the feet which rest upon the columns of the framework. As to the valve-arrangement, the use of piston-valves on the high and intermediate cylinders and of a slide-valve on the low cylinder is very common; as is also the use of two or more piston-valves on one cylinder when it is large. Turning back to Fig. 243, we see that the H.P. valve receives steam at the middle and exhausts at the ends, through two outlets; these are joined by a branched pipe, which carries the steam to the middle of the intermediate valves; and a similar arrangement is used between the M.P. and L.P. cylinders. A good idea of the steam-pipe arrangement on marine engines can be got from Figs. 232 to 235; usu-

Digitized by Google

ally the pipes are of copper; and expansion is allowed for by making the piping of a flexible form or by the use of slip-joints.

The detailed construction of two of the cylinders of the engine under consideration is given in Fig. 260. Cone-disk pistons, steel castings, are used; and the chief purpose in drawing parts of the two cylinders side by side is to show how the pistons have all

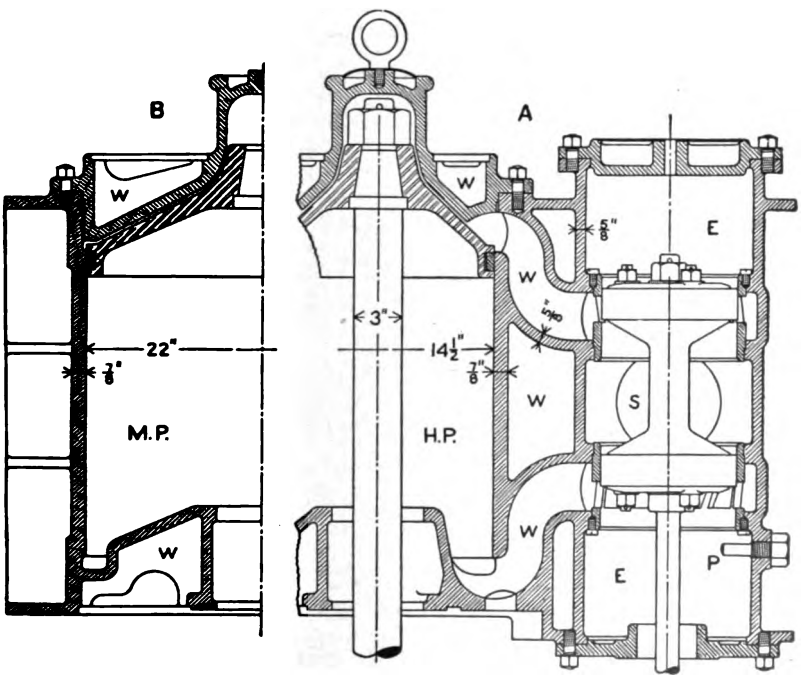

Fig. 260.—Details of Gunboat-engine Cylinders, Fig. 259. Scale 1 to 12.

the same height, so that the slant of the cone decreases with the diameter. The cylinder-heads are closely conformed to the piston, the lower head being cast solid with the cylinder and having an opening for the insertion of the stuffing-box. To separate the valve-chamber from the cylinder, uniting them by the ports and by stiffening-ribs as needed, is characteristic of marine practice. The two chambers on the intermediate cylinder are cross-connected in steam-space, ports, and exhaust-spaces. Note

Digitized by Google

the free use of ribs or webs (marked W) to stiffen the castin especially in the ports.

A detail of this piston-valve, showing how it can be adjust in diameter, will be found in Fig. 428. Other marine cylinde are more or less fully illustrated in Fig. 273 and Figs. 412 to 41

(*l*) THE CORLISS CYLINDER.—A representative example of th type of cylinder is given in Figs. 261 and 262; of the former, thre fourths is a section through the head-end ports, while the upp

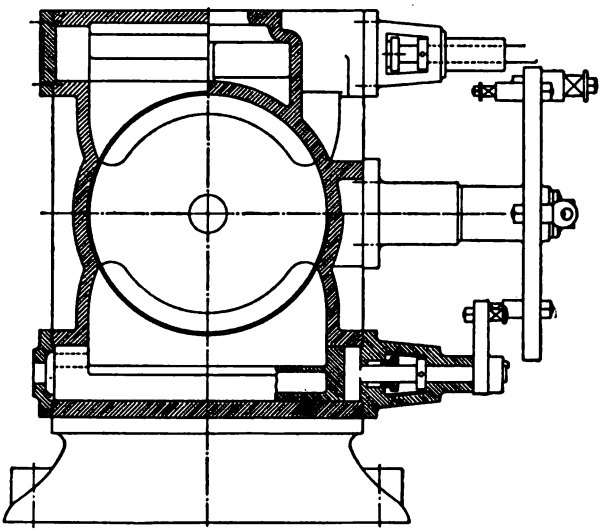

FIG. 261.—Cross-section of Cylinder in Fig. 262.

right-hand quarter is taken at mid-length. The general featu calling for particular notice are, the location and form of t valves and ports, the steam-chamber at the top, and the exhau chamber at the bottom. Fig. 261 shows a part of the valv gear, which will be found fully illustrated and discussed in § 5 for the present it is enough to know that the valves are oscillat back and forth so as properly to control the admission and exhau for the two ends.

As to the valves, we note that each is a complete cylinc at the ends, with a full bearing in which it turns; but at working part the steam-valve has only a narrow cylindrical fa

Digitized by Google

though the exhaust-valve fills more space. The valve-stem is a separate piece—the valves being, of course, made of cast iron—with a T head that fits into a slot cut in the end of the valve. The valve-chambers are closed at the ends by caps or bonnets, of which the one at the rear carries, on a yoke, the valve-stem bearing. In this engine a couple of large holes are drilled through the front heads of the exhaust-valves, to give passage to the relief-valves, which are screwed into the bonnets. On the back

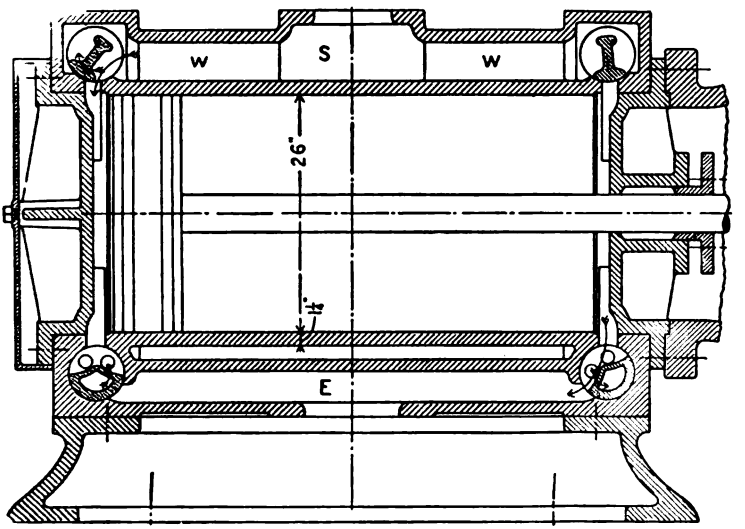

FIG. 262.—Lengthwise Section of Corliss Cylinder, 26" by 48". Scale 1 to 21.

of the cylinder, at mid-length, is formed a seating for the wrist-plate bracket.

The valve-chambers are here of the rectangular form, so that the cylinder has the square-cornered effect seen in Figs. 210 and 211. Sections of round valve-chambers are given in Figs. 241, 269, and 270: this closer conformation to the shape of the valve is usual in the later designs. In Fig. 262 the exposed surfaces of the valve-chambers are polished, in order to diminish the radiation of heat: with round-cornered cylinders, the sheathing covers everything. It is to be noted that the steam-chamber S is formed

Digitized by Google

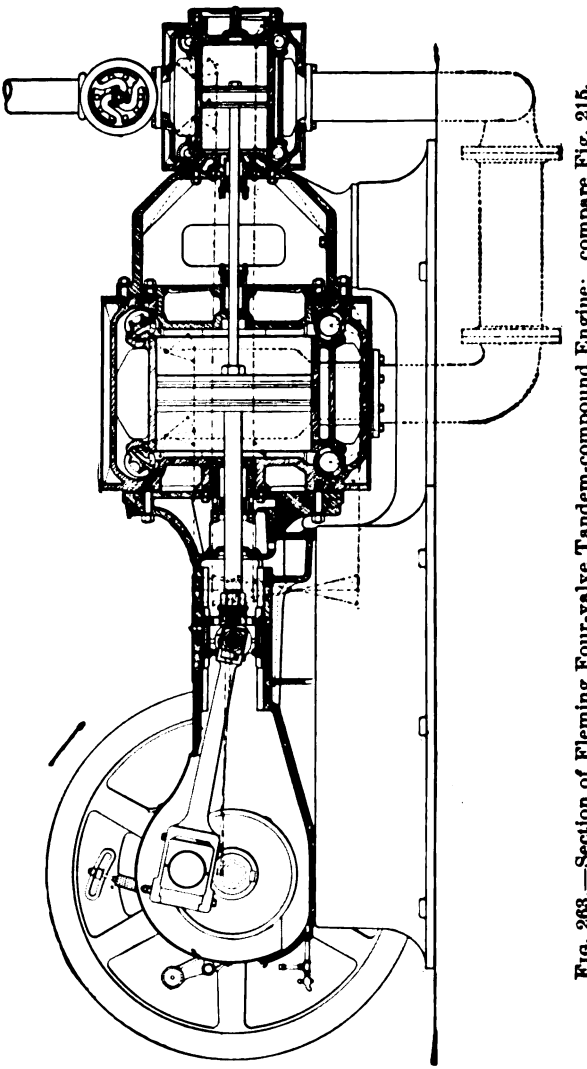

FIG. 263.—Section of Fleming Four-valve Tandem-compound Engine; compare Fig. 215.

Digitized by Google

right upon the cylinder, so as to steam-jacket a part of its surface; but the exhaust-chamber is separated from the cylinder-body. Stiffening webs, marked W, run along the middle of the steam-chamber. The main pipe-connections are obvious.

A high-speed engine with Corliss valves is illustrated in Fig. 263, which we now examine with especial regard to the form of the cylinder. Note the shield which extends beyond the valve-chambers, and forms the rectangular end better seen on Fig. 215. The valves of this engine are much more complex in shape than those in the preceding example, the steam-valves being triple-ported for small openings, double-ported for large ones. These, together with the valve-gear, will be more fully considered later.

(*m*) CYLINDERS WITH GRIDIRON VALVES.—After the Corliss type of oscillating plug valve, the next single-function type to be considered is the gridiron valve; which, by a simple sliding movement, opens and closes a number of ports. One prominent example is given in Figs. 264 and 265; the valves are long narrow slides with a number of openings running crosswise. In general arrangement this is very much like a Corliss cylinder, but with marked differences in the form of the valve-chambers. The valve-seats are separate inserted pieces, which is a decided advantage both as to original construction and as to ease of repair or renewal.

This engine has a positive valve-gear, of quite a complicated form, which will be fully discussed in the next chapter. To get a quick and variable cut-off, a second valve is used, working upon the back of each main steam-valve, and controlled by a shaft-governor, so that each cylinder has six valves in all. The exhaust-valves are closely guided between their seats, which are bolted fast, and the body of the cylinder: the steam-valves have more freedom; there is a clearance between the riding-valve and the ends of the fixed pins or studs that project inward from the valve-chest covers, so that the valves can rise about 1/16 inch from their seats; but they are kept from rattling, when running loose after steam is shut off, by the movable guides shown in Fig. 264. These are held by pins, which pass through an oblong hole; and each is pressed inward by a flat spring between its head and the cover.

Digitized by Google

An essential feature of any large engine, shown very cle in Fig. 264, is the relief-valve, which opens when the pressur the cylinder becomes excessive, as when water is accident

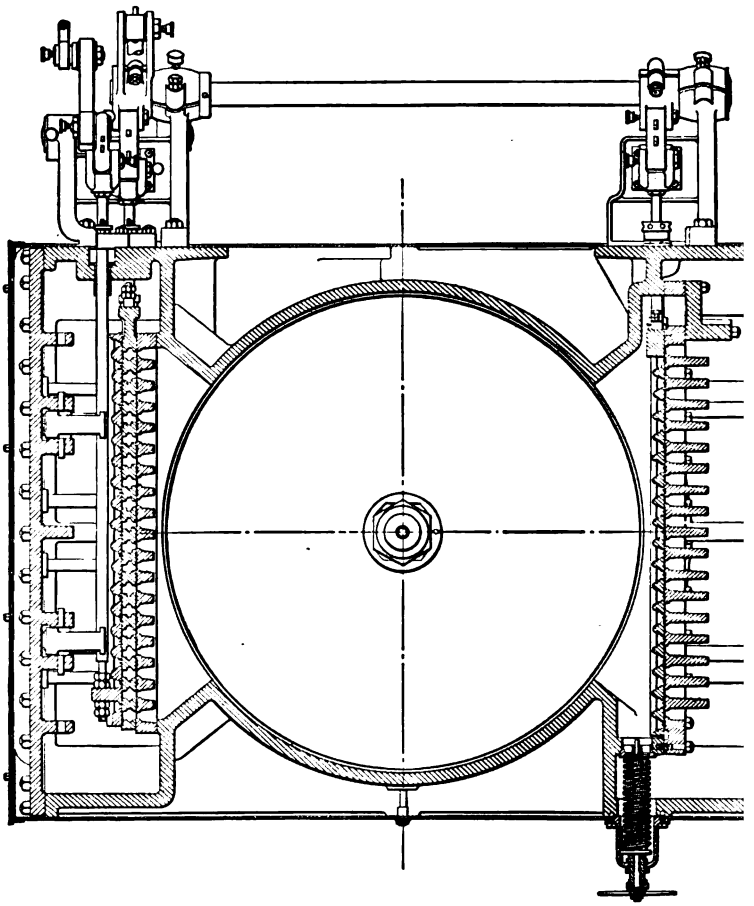

FIG. 264.—Horizontal Section, low-pressure cylinder of vertical compo McIntosh & Seymour Engine; see Fig. 218.

drawn in. In general, a relief-valve is simply a spring-loa safety-valve; but the one here shown serves also as a drain-va since it can be opened by turning the star-wheel so as to d

Digitized by Google

the valve back, compressing the spring. Note how this valve opens directly into the exhaust-chamber.

A very compact valve-arrangement, withal convenient of access, is that in the Wheelock engine, Fig. 266. The two gridiron valves for one end are carried in a cylindrical plug, in which their seats are formed. This plug is inserted like a Corliss valve; it is given a slight taper, so that it will draw up tight; it carries the whole valve-gear on the head bolted to its outer end; and it can be removed when the valves are to be examined or repaired. This is the first steam-jacketed cylinder that has been shown: here the steam-chamber and the jacket are in all one, so that the

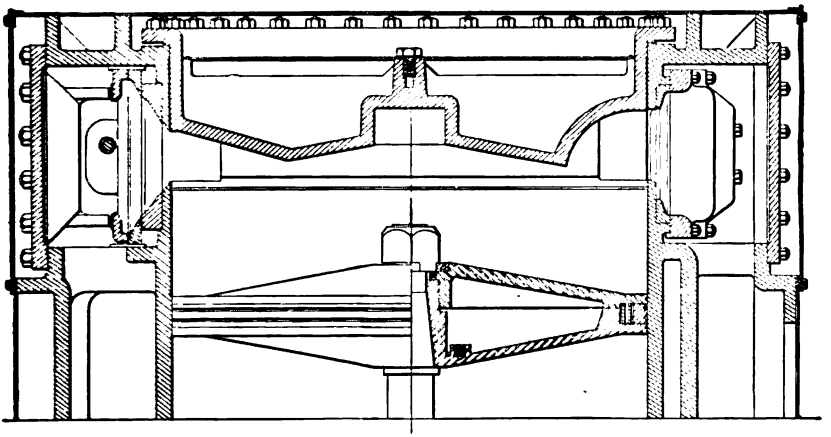

FIG. 265.—Axial Section of Cylinder in Fig. 264.

whole supply of steam passes through the jacket. The structural details involved in the arrangement will be touched upon presently; and illustrations of the valve-gear, which is of the releasing type, will be given in the next chapter.

(*n*) DROP-VALVE ENGINES.—All the valves so far shown act by the sliding of one surface upon another, whether the surfaces be flat or cylindrical. Radically different in form and action are valves of the lift or poppet type. These are not much used in American or English practice, and less now than formerly: but on the Continent of Europe, and especially in Germany, engines of the type illustrated in Fig. 267 are very common.

Digitized by Google

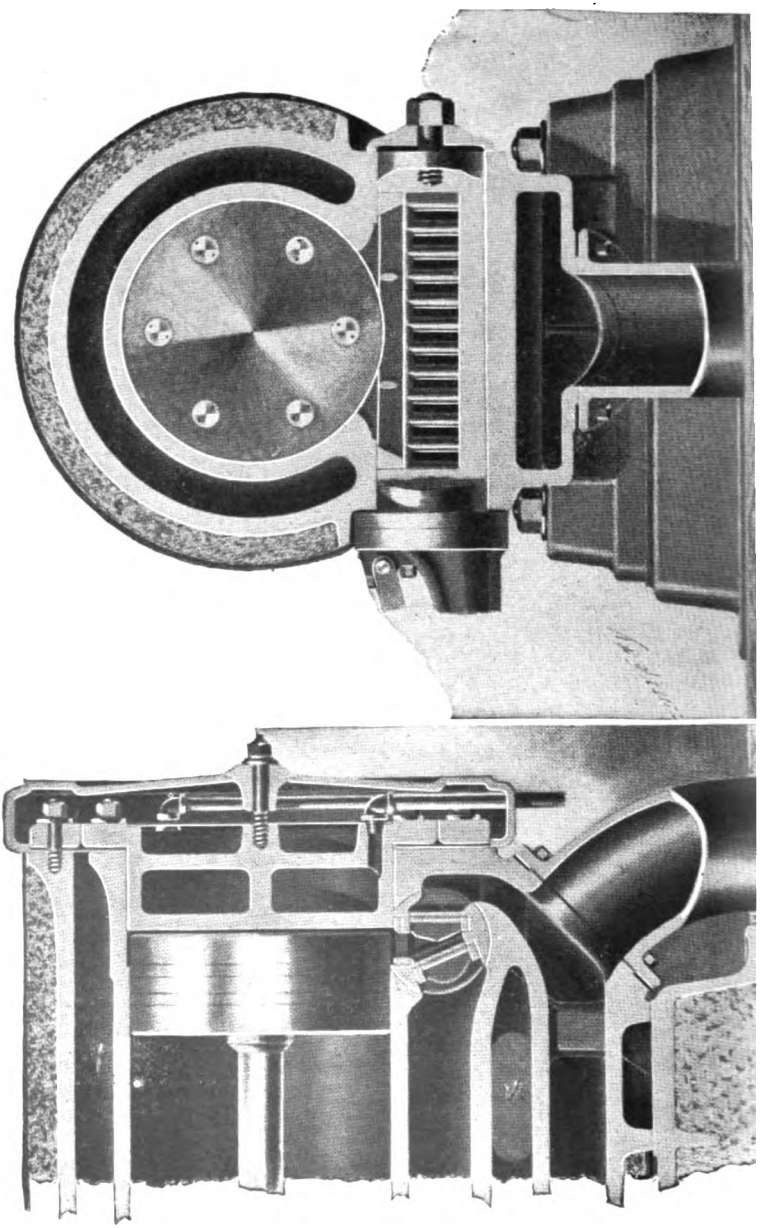

Digitized by Google

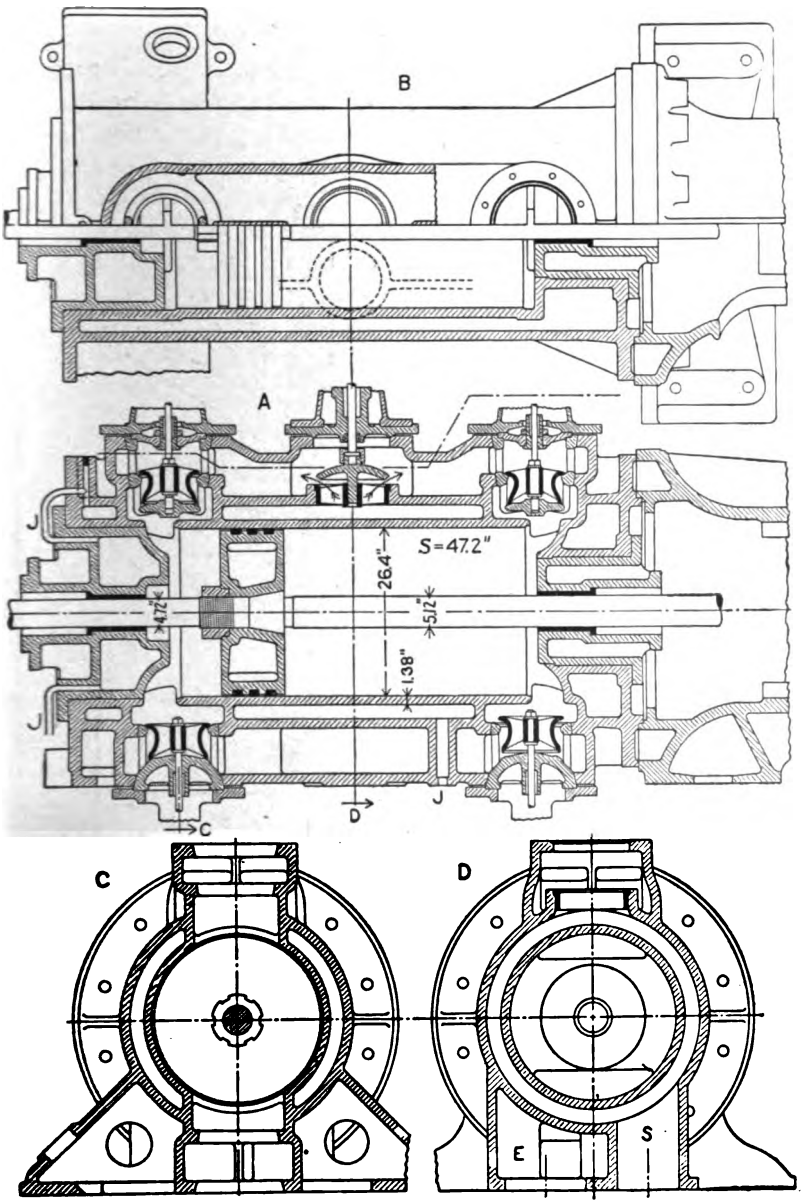

FIG. 267.—German Drop-valve Engine; high-pressure cylinder of 670 and 1075 by 1200 mm. compound engine. Scale about 1 to 30.

Digitized by Google

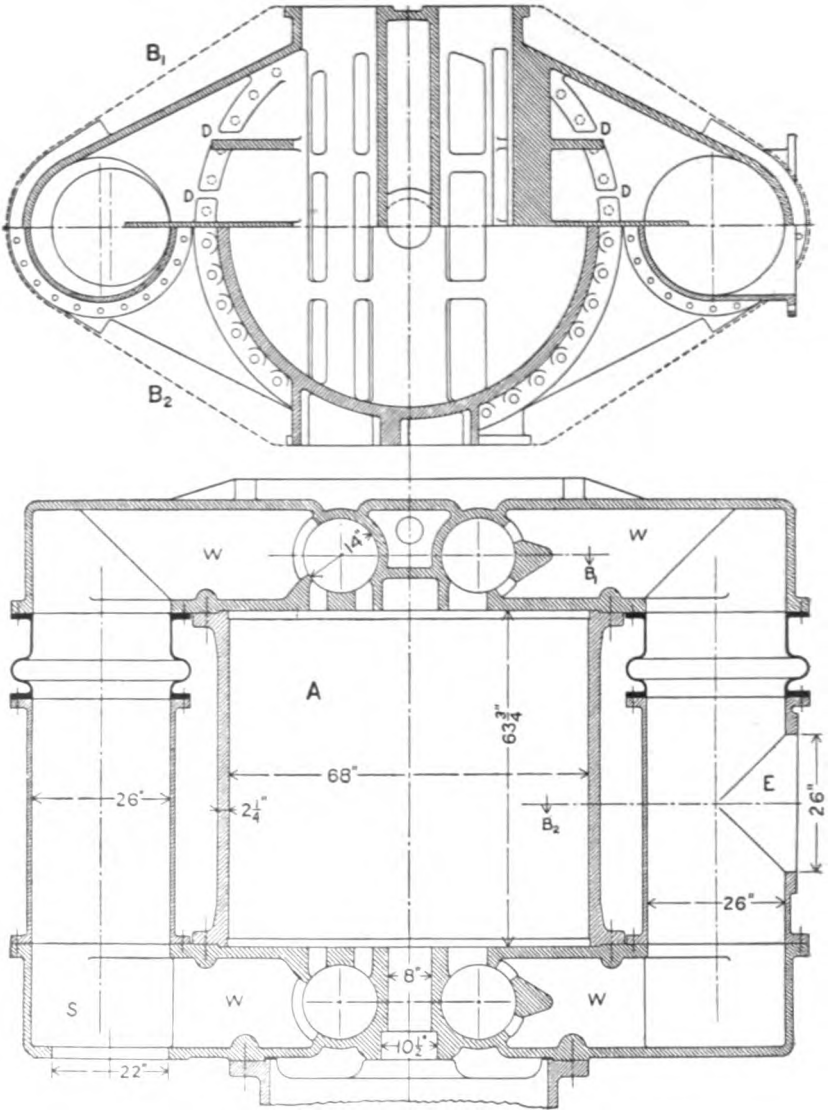

Fig. 268.—Large Corliss Cylinder with valves in heads and separate side-pipes; low-pressure cylinder of 32″ and 68″ by 48″ vertical cross-compound engine, Allis-Chalmers Company; compare Fig. 219. Scale 1 to 36.

Digitized by Google

In Fig. 267, view A shows the most detail: we note first the form of the valve-chambers, seen also at C; next the inserted valve-seats, and the double-seated balanced valves; then the form of the steam- and exhaust-chambers, which are just like those on a common Corliss cylinder, the steam-chamber being further shown on the upper half of view B. The cylinder is very fully steam-jacketed, on both barrel and heads; a peculiar feature is the location of the throttle-valve, at the top of the jacket. It is quite usual, however, in European practice with stationary engines, thus to pass the live steam through the jacket.

This is the first engine with an extended piston-rod, running out through the back cylinder-head, that has been shown in section. External views of a similar arrangement have been given in Figs. 216 and 221; here also the outer end of the piston-rod rests upon a small slide-block. By this means the weight of the piston is largely carried by the rod, and wear between the piston and cylinder is diminished; further, the piston is a little more positively guided along the axis of the cylinder, which is the reason why the extended rod is often used in vertical, especially in marine, engines.

Some framework detail is here shown: the cylinder is supported at the head end by a broad footing cast with it; at the other end, it is carried by the frame. The position of the exhaust-valves makes it necessary that the space beneath the cylinder be kept clear, so that the foundations must come up at the sides of this space. The frame differs in detail, but not greatly in general form, from those already shown.

The valve-gear of this engine could not well be shown to the small scale used on Fig. 267: the type will be found in Chapter IX. There is a side shaft running back along the engine, as in Fig. 214, with an eccentric and a special mechanism for each valve, the steam-valves being released as in a Corliss gear. To bring quietly to rest a drop-valve, where there is a positive stoppage of metal on metal, is essentially a far more difficult and delicate task than that of the Corliss dash-pot; nevertheless, these engines are run as fast as ordinary Corliss engines, the one here drawn having a normal speed of 94 R.P.M.

916448
Digitized by Google

(*o*) CORLISS CYLINDER WITH VALVES IN HEADS.—This arrangement is often used in large engines; for besides diminishing the clearance-volume, it greatly simplifies the cylinder-casting. In Fig. 268 is shown the low-pressure cylinder of a large vertical

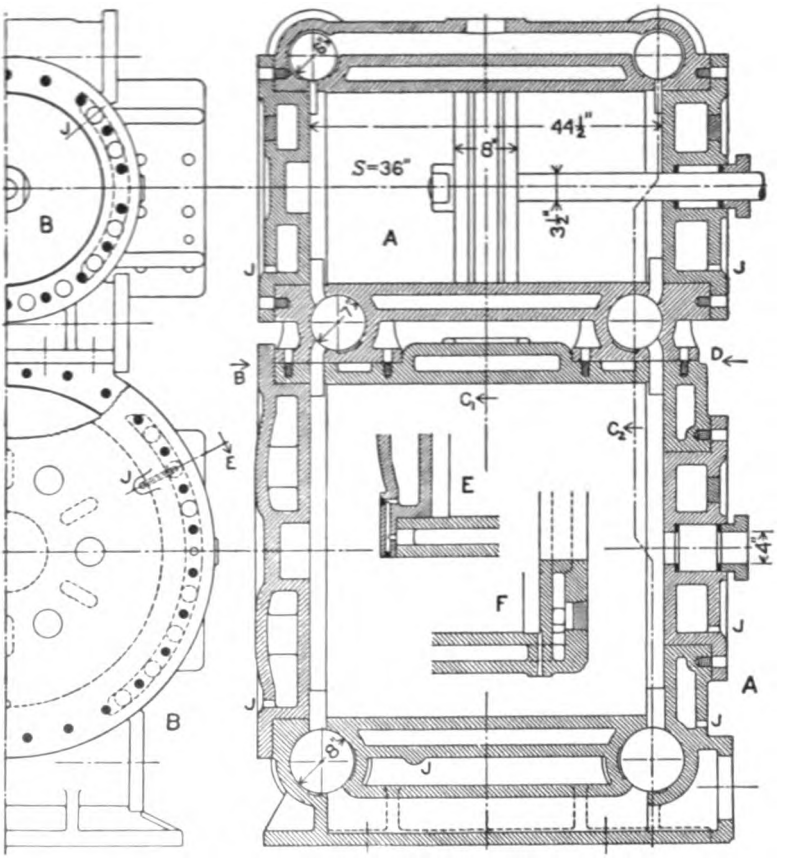

FIG. 269.—Cylinders of Holly Compound Pumping-engine, Fig. 227. Scale 1 to 24.

engine: it is of the same design as that in Fig. 219, and the outline of the covering which gives the external form is shown by the dotted lines in the top view. The valves, both double-ported, are brought as close together as the piston-rod will allow, in order

Digitized by Google

to get the long port-openings shown at B. The flat surfaces of the heads are tied together by several vertical webs. In the steam and exhaust connecting-pipes at the sides are included expansion sections, which are thin phosphor-bronze castings. As a

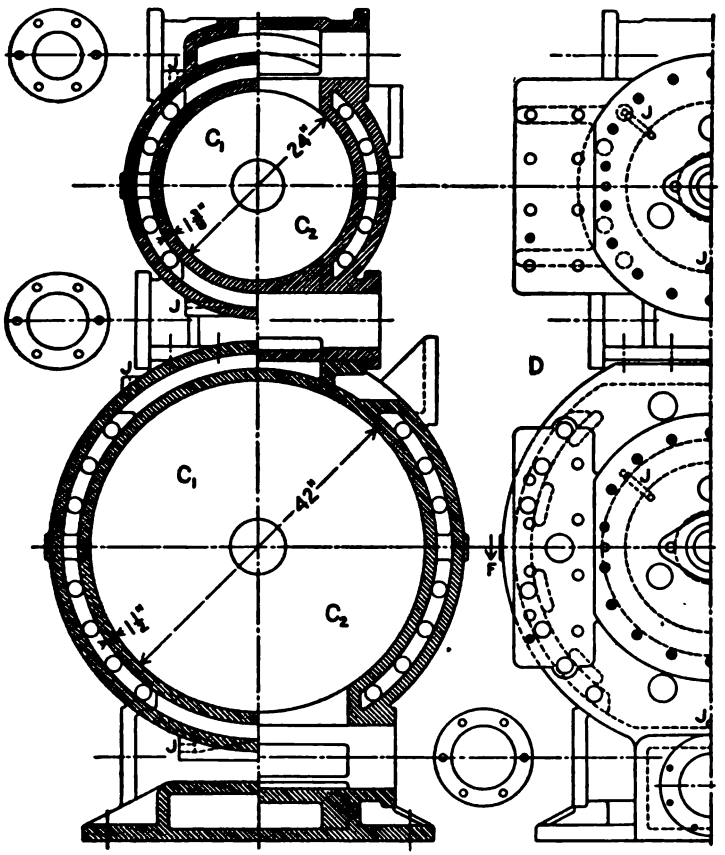

FIG. 269.—*Continued.*

minor detail, it is interesting to note the slots made at D, D, view B, in the ridge which gives depth of metal for the stud-bolt holes; these slots permit the drainage of the shallow pockets which would otherwise tend to catch and hold water.

Digitized by Google

Another cylinder of this type, but with the steam-ch formed upon the cylinder-barrel in the usual manner, is shown in Fig. 271.

(*p*) CORLISS CYLINDER WITH SOLID CAST JACKETS.—Fi besides showing the cylinders in very compact arrangement trates fully the method of construction wherein all the steam spaces are formed by coring the casting—of which Fig. a parallel example. As to the jackets on the cylinder-l we note how they extend all around the middle of the cy but are kept out of the way of the valve-chambers; and ho holes are formed at the ends, for digging out the sand fr casting. At the front end of the large cylinder, the side runs into that on the head; the two walls being connected by struts, as shown in dotted lines on D and by the detail sec F. A similar arrangement of the jacket is seen in Fig. 267

Of the hollow cylinder-heads, only the large one on th end of the L.P. cylinder has its inner and outer walls t gether with webs: on all of them, the location of the cor is shown. They all receive their steam-supply from the jackets after the manner shown at detail view E. On this as also on Fig. 267, the letter J is used to mark the points of connection, whether for supply or drainage. While not nec it is better to plug all the core-holes in the ends of the cyl except those concerned in the jacket-supply, in order to di the number of places where leakage is likely to occur.

(*q*) CYLINDERS WITH LINERS.—The decidedly more method of construction for steam-jacketed cylinders, especi large sizes, is exemplified in Figs. 270 to 273. When the cy wall proper is thus a separate piece, the operation of maki casting, in the foundry, is very considerably simplified; easier to get a sound casting with the simpler form; a metal for the liner can be especially adapted to resisting In Fig. 270, where two half-sections at right angles to eacl are swung into the same plane, the exhaust-valves a shown; but a special feature of the design is the manner in the exhaust-chamber surrounds the cylinder, outside the so that the latter serves also, to some extent, as a reheater

Digitized by Google

exhaust from this H.P. cylinder passes from the outlet at the left, through a connecting-piece, to a similar inlet on the L.P. cylinder. The cylinder-heads are jacketed, and in each there are two relief-valves.

When a liner is used in an engine-cylinder, provision must be made for carrying the steam-ports through or past it, and for holding the liner in place. In Fig. 270 the ports pass the ends

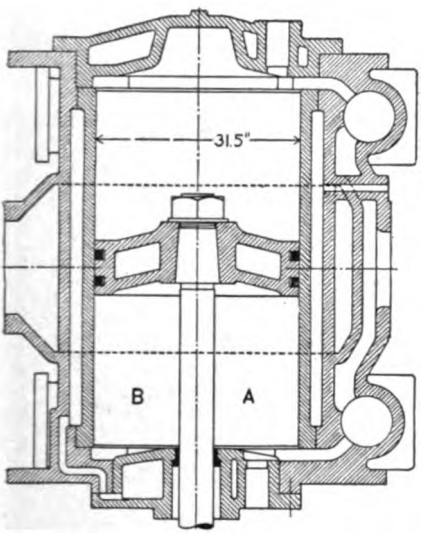

FIG. 270.—Two Half-sections of High-pressure cylinder of French vertical Corliss engine, see *Engineering*, 1901, Feb. 8. Scale 1 to 30.

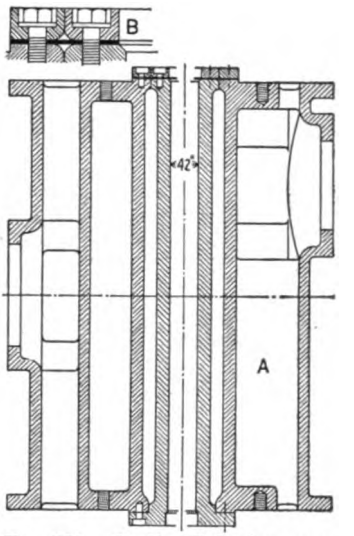

FIG. 271.—Corliss Cylinder, general arrangement as in Fig. 268, but with liner and with steam-chambers cast on cylinder. Scale 1 to 30.

of the liner; and between the ports there are projecting shoulders upon the cylinder-heads, which touch the ends of the liner and keep it in position. Fig. 271 gives two partial sections of a cylinder arranged as in Fig. 268: here the ports are entirely clear of the jacket; the liner is bolted fast at one end, and at the other end is used a diaphragm joint, made with an annulus of thin copper plate held down by two rings—a method used in Fig. 266 also. Of course, the cylinder-heads are formed around these jacket-joints, without clearance.

Digitized by Google

In Fig. 272 we have a case where the ports pass through the liner, which must then have a long bearing at each end; and we see further an example from American practice wherein the steam passes through the jacket on its way to the engine. It does appear, however, that this jacket is to be considered rather an adjunct to the large steam-passage which rises from the inlet at the bottom than itself the steam-passage as in Fig. 267; and that most of the water formed by condensation in the jacket will have a chance to separate quietly and be drained away, without being caught up by the main current and carried into the cylinder.

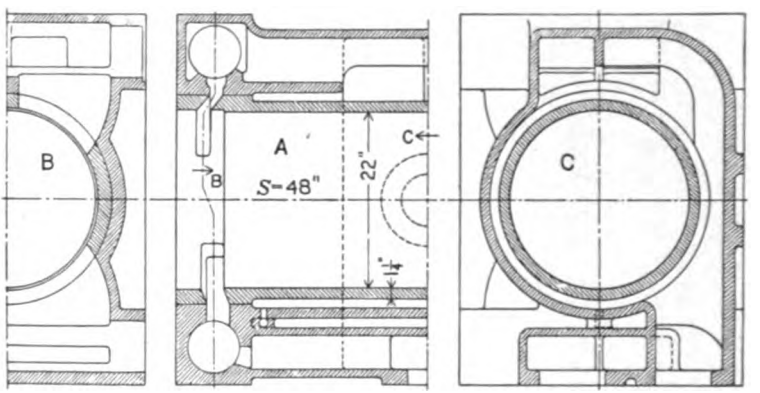

FIG. 272.—High-pressure Cylinder of Corliss Air-compressor. Scale 1 to 24.

The most usual form of liner for a marine cylinder is shown in Fig. 273 I.: the flange at the bottom is tightly fitted and fastened with sunk-head bolts: at the top the plain contact joint is reinforced by a soft copper ring, which is calked into the dovetail groove. In II., with the same general arrangement, a packing-ring is used, held down by screws upon a filling of hard-packed asbestos in the recess. At III. is seen a special recessed joint at the bottom; while IV. shows the occasionally used method of bolting the liner fast at the top, with bolts spaced as far around the cylinder as the steam-port will permit.

The liner is forced into place, usually with a hydraulic press; but to make the fit close enough to prevent leakage is likely to

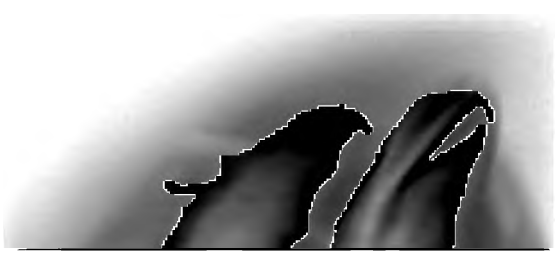

Digitized by Google

bring too much strain upon the outer shell, especially with the thin castings usual in marine construction—hence the employment of special devices for making the joints tight. For a fixed joint, as at the bottom in Fig. 273 I., a coating of red-lead paste

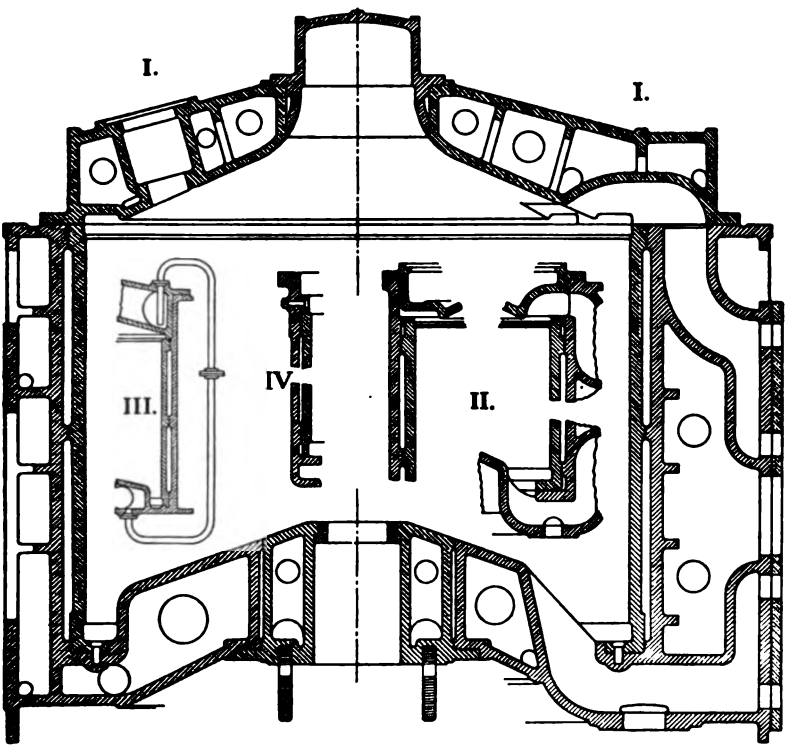

FIG. 273.—Marine Cylinders with Liners.
I. French Battleship, III. French Torpedo-boat, both by Schneider & Co., see *Engineering*, 1898 II; II. and IV. U. S. Cruisers. Scale 1 to 24.

between the surfaces is very effective; but where variable expansion of the two shells causes relative movement this can do little good. The successive cylindrical fits are, of course, made larger in diameter toward the top, so that the liner can be dropped almost into place, and need be forced home through only a short distance. The contact band at mid-length is usually continuous, except

Digitized by Google

where grooves are cut through the ribs after machining, to the steam pass.

Of other important features shown in Fig. 273, the first is cellular form of the heads in I. and III., which are made double walls fully braced, as much for strength as for the of the steam-jacketing. In I., further, we see the cylinder off short at the top, and the steam-port formed partly in head; this simplifies the main casting but gives a non-circ bolting-flange. At III. is shown the method of draining the head when used as a steam-jacket: since the drain-pipe se as supply to the lower head, condensation in the latter ma effective the siphon, which draws out any water that may col at the lowest part of the upper head.

Sometimes stationary or locomotive cylinders are fitted v liners in the form of a bushing with a continuous fit, an exan appearing in Fig. 438. This permits the use of a hard, close-grai iron for the rubbing-surface. The liner may be a part of the o inal design, may be added where the main casting has sh blow-holes or sponginess, or may be used to reduce the diam after extensive re-boring. Always in stationary practice, usually in marine, the jacket-liner is of cast iron; but someti forged steel is used, especially in naval engines where the saving weight is highly important.

(*r*) STRENGTH OF THE CYLINDER.—Of the various forces wh act upon the cylinder, only the internal steam-pressure produ stresses which can be calculated; but the other, unknow force-actions may have a large effect, so that the designing the cylinder is very much a matter of experience and good ju ment. To get an idea of the effect of steam-pressure alone, apply to several of the examples illustrated the formula for st tending to cause longitudinal rupture, namely,

$$PD = 2St; \quad . \quad . \quad . \quad . \quad . \quad . \quad . \quad (3$$

where P = steam-pressure, in pounds per square inch;
D = diameter of cylinder, in inches;
t = thickness of metal, in inches;
S = tensile stress, pounds per square inch.

Digitized by Google

Results got by this formula are given in Table 43 A, where the stated or assumed highest probable boiler-pressure is used. The first cylinder is exceptionally thick, other designers using about 1″ for this size. It appears, then, that in stationary engines S is likely to be somewhere in the neighborhood of 1000 lbs., while for transportation service it ranges from 1500 to 1700. In the last two examples, a calculation thus based on the least thickness is not at all a true test of strength, the casting being strongly reinforced by ribs and flanges.

TABLE 43 A. STRESS IN CYLINDER-WALLS DUE TO STEAM-PRESSURE.

Fig.	Type of Engine.	Pressure.	Diameter.	Thickness.	Stress.
251	High-speed.....	100	15″	1¼″	600
262	Corliss, simple.....	100	26″	1¼″	1040
268 (H)*	" compound...	150	32″	2″	1200
271 (H)	" " ...	150	42″	2″	1575
247	Locomotive.....	200	20″	1¼″	1600
245 (H)	Marine.....	180	17″	1″	1530
259 (H)	Naval.....	200	14.5″	⅞″	1660
273 I. (H)	"	210	44.5″	1.57″	2970
273 III. (H)	"	210	16.7″	.53″	3300

SEATON gives for the minimum thickness of marine-engine cylinders

$$t=\frac{PD}{3000} \text{ to } \frac{PD}{3600}, \quad . \quad . \quad . \quad . \quad . \quad . \quad . \quad (302)$$

or S from 1500 to 1800, the latter figure being for the highest grade of iron.

While the body of the cylinder is of a self-sustaining form, other parts, as for example the walls of the steam-passages, need support. In marine cylinders especially, free use is made of cross-webs: and in some cases even stay-bolts or stay-rods, analogous to those used in boilers, are put in to tie the port-walls together at critical points—see Figs. 411 and 414.

* The symbol (H) means that the high-pressure cylinder of the engine, whether shown in the drawing or not, is the one referred to.

Digitized by Google

Other stresses besides those due to pressure may be caused by irregular contraction in the original cooling of the casting, by unequal temperatures of the different parts under working conditions, by external forces due to the manner of support or of connection to the framework, and especially by the accidental presence of water. The most frequent cause of breakage of the cylinder is the effort of the piston to compress into the clearance space a body of water larger than the volume of that space. Preventives are, a well-drained separator in the steam-pipe, liberal drains and relief-valves on the cylinder, and, with a jet-condenser, a vacuum-breaker which will admit air if the condenser accidentally fills with water up to a certain level and thereby keep the water from ever being sucked up into the cylinder.

An important consideration is that a fairly thick cylinder can be molded with less trouble and cast with a better expectation of soundness of metal than one that is relatively much thinner. Take Fig. 273 I. as an example: it is very fully ribbed and braced, which makes the pattern expensive; there will be many cores in the mold, and they must be very accurately set and firmly held; and a high degree of skill is needed to get a sound casting. For all these reasons, the saving of weight in marine cylinders is far from representing a saving in cost. This requirement of a good thickness of metal, not only for constructive reasons, but also to permit re-boring of the cylinder when worn, is embodied in empirical formulas like that of UNWIN,

$$t = .02D + 0.5 \text{ to } .02D + 0.75 \text{ ins.}; \quad . \quad . \quad . \quad (303)$$

where the effect of the constant term is to make a small cylinder relatively thicker than a large one.

In the matter of external forces, the cylinder that is supported wholly or chiefly by being bolted to a full circular seating on the frame is least likely to be unduly strained. That is, in the usual Corliss type of construction, where the relatively large weight of the cylinder is carried by the foundation, there is a possibility that irregular settling of the latter may cause severe stress; while the overhanging cylinder of the small high-speed engine, once

Digitized by Google

made strong enough to carry its own weight, is not liable to an increase in this load. In vertical engines, the complete frame of the stationary type carries the cylinder in a more favorable manner than does the marine frame. Large low-pressure cylinders, relatively thin, are not at all rigid, so that even their own weight can distort them; thus the larger cylinders for a marine engine must be bored with the axis vertical if they are to be truly round when mounted in place upon the engine.

It is not the purpose of this book to go into the details of the design of the machine for strength: except as an idea of proportion may be got from the numerous drawings given, the reader is referred to works on machine design for rules covering these matters.

(*s*) STEAM-TIGHT JOINTS.—An important detail of the flanged cylinder-head joint, shown with most emphasis on Figs. 247 and 256, is the formation of a narrow contact-ring inside of the bolts. The rest of the flange-surface is cut back a little, or relieved, so that the full grip of the bolts is concentrated on this narrow strip. This surface is finished true and flat, and constitutes a "ground" joint, with which no packing need be used. When packing is found necessary, a gasket of heavy paper is often enough, with good surfaces; sometimes metallic gaskets, made of lead or soft copper, are used; but rubber sheet-packing, such as is placed between pipe-flanges, ought not to be required to make any cylinder-joint tight.

Any arrangement other than the firm contact of metal on metal is especially out of place when the flange of the front cylinder-head comes between the cylinder and the frame, as in Figs. 241, 250, 251, etc. The double requirement of making a tight joint and of holding the cylinder in true alignment is somewhat more severe upon the front bolts than is that of merely holding the cylinder-head—this depending very much, however, upon how truly and strongly the cylinder is supported—and quite often these bolts are made a little heavier than those at the back. In Figs. 254, 260, 263, 267, etc., are seen the examples in which the front head is cast solid with the cylinder; nearly always, with this arrangement, there is an enlarged opening through which a

Digitized by Google

heavy boring-bar can pass, and which is then closed by the inserted stuffing-box. In Fig. 253 the front head is put into place through the cylinder, and is held fast by a few light stud-bolts, which are helped by the steam-pressure. The narrow joint surface, at both ends, is packed by a ring of rectangular copper wire, forced into a groove in the face of the ledge on the head, and faced off so as to project about $\frac{1}{32}$ in.

Bolts.—It will be noted that stud-bolts seem to be used altogether; rarely, if ever, are the flanges made wide enough to give room for through-bolts, nor is it desirable to give the bolt-circle the needlessly large diameter that this would require. The stress in these bolts is a resultant of the original tension due to the screwing up of the nuts and of that due to steam-pressure. When the bolts are screwed tight, they are stretched (within the elastic limit, of course) and the metal of the contact surfaces is compressed: when the steam-pressure comes on the head, it stretches the bolts still farther, and in so doing eases up somewhat the pressure in the joint. The total tension in the bolts is, therefore, not the original tension plus the steam-pressure, but is less than this sum. It is usual, however, to base the effective sectional area of the bolts upon the total steam-pressure on the head, using a low working stress in order to allow for the rather uncertain initial tension. This working stress is usually from 3000 to 4000 lbs. per sq. in.; and the distance between the bolts, which determines their number, varies from 4″ to 6″, depending upon the thickness and stiffness of the flange.

The considerations just stated apply also to the joints under the various valve-chest covers. These pieces must, of course, be designed so as to have the requisite strength and stiffness to resist the pressure to which they are subjected.

A minor detail of considerable usefulness is the jack-, or lifting-screws, for starting cylinder-heads and other bolted covers when taking them off. At the ends of a diameter two holes are tapped in the flange, between the bolt-holes; and tap-bolts run through these against the cylinder-flange loosen the head very easily, after which the same holes can be used for the lifting-handles or eye-bolts.

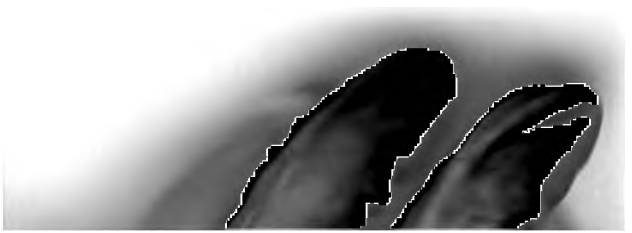

Digitized by Google

(*t*) CYLINDER PROPORTIONS.—The ratio of diameter to stroke varies with the different classes of engines. In the short-stroke, high-speed type it is usually a little less than one, but is occasionally greater; in simple Corliss engines the ratio is generally from 0.5 to 0.6. Multiple-expansion engines begin with some such ratio as this, but often get it well up toward 2.0 in the low-pressure cylinder. The ratio of diameter to length (between heads) would give a better idea of the real form of the cylinder; but this would involve the thickness of the piston, which varies quite widely.

The piston-clearance, or the distance between cylinder-head and piston when the latter is at the end of the stroke, depends upon the size of the engine and upon the number of working joints, subject to wear and adjustment, between the cylinder and the shaft-bearing. Thus one rule is, for small engines start with $\frac{1}{8}$ in. and add $\frac{1}{16}$ for each joint; for large engines, change these values to $\frac{1}{4}$ and $\frac{1}{8}$. If the pistons and heads are faced off and if the joints are so arranged that their take-ups neutralize each other (see Figs. 302, 304), much smaller clearance-distances may be used.

(*u*) DESIGN OF THE STEAM-PASSAGES.—This is a simple matter that can very well be taken up here, without waiting for the close study of the form and action of the valve. The determining factor is the permissible velocity of the steam-current. For a given rate of flow, the area of cross-section must be such that this velocity will not be too high. Rate of flow and rate of piston-displacement have the same factors, area and velocity; and if the steam is to fill up closely the space behind the moving piston, these two volume-rates must be equal.

It is customary to proportion the steam-passages so that the maximum velocity of flow shall not be greater than from 160 to 240 ft. per sec.; this maximum occurring when the piston is near the middle of its stroke, and therefore seldom existing, for the entering steam, in engines where the normal cut-off is early. During exhaust, however, this maximum velocity is always reached. It may appear that the exhaust steam will have to flow much more rapidly than the live steam because its specific volume is so much greater; but we must remember that a great part of the steam escapes while the piston is moving slowly, near the end of the

Digitized by Google

stroke; and thereafter the steam of low pressure has merely to get out of the way as the piston returns.

Referring to § 26 (*b*), we see that the pressure-drop required to produce the above-named velocities, through an ideal orifice, would be very small—far less than the loss between the steam-chest and cylinder usually observed in engines. But other resistances have a greater effect than does the inertia of the steam: and this range of steam-velocity has been found by experience to embody a good compromise between excessive pressure-drop on one hand and excessive clearance-volume on the other.

Comparing the maximum velocity of the piston (essentially the same as the linear velocity of the crank-pin) with the mean rate of travel, we find the ratio to be $1.\dot{6}$ to 1; with infinite connecting-rod the ratio is π to 2 or 1.57 to 1; and the effect of the actual rod is closely enough accounted for by using 1.6. With this ratio, a maximum velocity of 160 to 240 corresponds to a mean of 100 to 150 ft. per sec., or of 6000 to 9000 ft. per min. The last is directly comparable with the mean piston speed of 600 to 1200 ft. per min.: and the section of the steam-passage ranges, in practice, from one-tenth to one-sixth of the area of the piston, with one-eighth as a good average value.

After the velocity, the next consideration is the desirability of keeping down the amount of clearance-space: this exerts a strong influence in the direction of making the ports short and direct by the use of separate valves near the ends of the cylinder. Where there are separate valves for admission and exhaust, and the prevailing cut-off is early, it is customary to make the exhaust-port larger than the other, as appears in Figs. 262, 264, 269, etc.

§ 44. The Reciprocating Parts of the Engine.

(*a*) THE PISTON.—Before reviewing the pistons which have appeared in the cylinder-drawings just given, and before discussing the more detailed drawings now to be presented, it may be well to re-state the conditions which this piece must meet, as already set forth in § 2 (*c*):

Digitized by Google

First, the piston must have strength to resist the steam-pressure; but it must be no heavier than necessary, lest there be excessive inertia of the moving parts and undue wear of the cylinder.

Second, the piston must have a broad rim or working face, especially in horizontal engines, to furnish plenty of rubbing surface and diminish wear.

Third, tightness against the leakage of steam must be secured, by the use of packing-rings. The solid piston-body is a little smaller than the cylinder-bore, and the gap between them is closed by the packing.

(*b*) Solid Box Pistons.—Sectional views of the plain hollow cast-iron piston, all in one piece, have been given in Figs. 6, 247, 251, 254, 256, and 267, so that no further illustration of this type is needed. For diameters less than 24 inches it is overwhelmingly prevalent; and it is often used for larger diameters, up to 48 inches. An absolutely simple example is given in Fig. 254, where the hub is cylindrical, the two disk-faces are flat and of uniform thickness, a number of radial stiffening-ribs are used, and there are two plain packing-rings. In Fig. 247 the design is closely similar except that the faces are made very slightly conical, so as to taper the metal toward the rim, and the nut is partly sunk into the hub. In Fig. 251 the piston is unusually broad, the rim is reduced in thickness between the slots, and no radial ribs are used. The noteworthy feature in Fig. 267 is the close accommodation of the outer profile of the hub-section to the shape of the hole for the rod. Fig. 6 shows a very light piston, with a special method of securing the rod and a large number of very light packing-rings: this piston is made with the metal thin not merely to save weight, but also with the idea that the piston, easily replaced, will be the part most likely to break in case of a smash-up due to the accidental presence of water in the cylinder. Finally, in Fig. 270 we have a box piston made slightly conical, which is a step in the direction of marine practice.

Comparing Figs. 247 and 254 with 6 and 267, we distinguish two types of ribs: the first comes out to the rim, with a hole near the middle of the rib; the other stops short of the rim. All these

Digitized by Google

pistons come from the foundry with a number of core-holes in face, usually one hole to each of the pockets formed by the r These holes are tapped and plugged before the piston is finished

(*c*) A GROUP OF LOCOMOTIVE PISTONS is given in Fig. 2 this is a favorable field from which to select examples, beca there is a wide variation in type of construction with mode size. Types I., II., and III. are from European practice, wh the box piston is less usual than in American locomotives. flat central-disk design, No. I., is an often used English ty the side-disk piston at II. is drawn accurately to scale fro standard German locomotive; while III. shows the cone-disk adapted from the marine engine. A true marine piston wo have the disk come to the other side of the rim, as will be seen

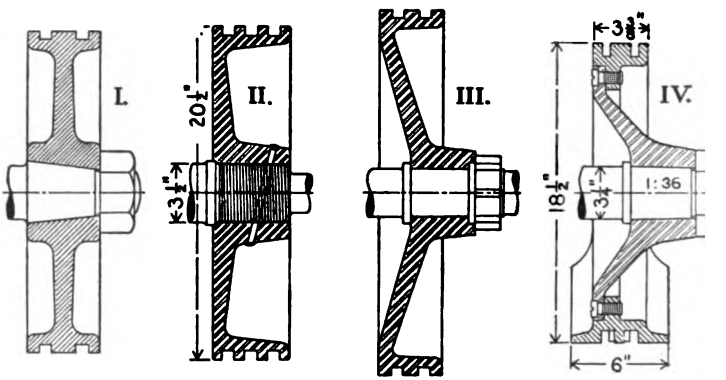

FIG. 274.—Locomotive Pistons of the Solid-disk Type. Scale 1 to 12

turning this drawing into the vertical-engine position, and t comparing it with Fig. 260 or Fig. 279. A still further depart from the marine type is seen in Fig. 256, where the larger pis has a Z-shaped section.

As drawn, Fig. 274 I. is heavy enough to be made of cast ir but II. and III., as also the L.P. piston in Fig. 256, are cast-s patterns. American designers have been chary of bringing c steel into rubbing contact with cast iron, believing that there a great liability to excessive wear and "cutting" of the surfa In Fig. 256, for instance, a brass facing is cast upon the rim of

Digitized by Google

piston, covering the whole space between the packing-rings (see also Fig. 280 III.): and in a similar way, a broad, thin cast-iron ring, made in halves, has been riveted upon the rim of a piston of this form. In Fig. 274 IV. is seen an arrangement which combines the steel cone-disk for strength with a cast-iron rim for wear. This is a standard design on the Pennsylvania Railroad, and is made in several diameters with a rim of the same width. The latter is broadened at the bottom over 120 degrees of its circumference, so as to have more weight-carrying surface. The rim is made .01 in. smaller than the disk at the fit and shrunk on, and the screws are riveted as shown. An advantage of this separate construction is, that when a cylinder is re-bored, only the cast-iron ring, and not the more expensive steel casting, need be renewed. It is to be noted that both the all-steel designs, at III. and II., have the extended piston-rod, which helps to carry the piston, and also steadies and guides it so as to diminish wear.

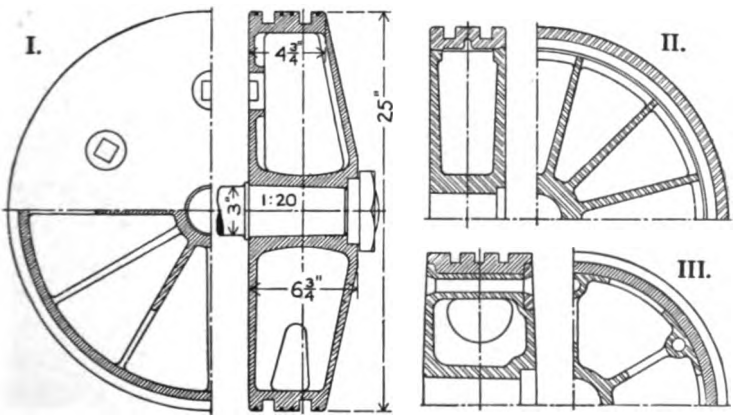

FIG. 275.—Extra Light Hollow Pistons for Locomotives. Scale 1 to 12.

The drawings in Fig. 275 show special construction of the box piston. I. is a standard Baldwin Locomotive Works design for the low-pressure cylinder of compound engines: as here shown, extra light, it is made of malleable iron (decarbonized casting); for plain cast iron, the cores are made smaller, so as to increase the thickness of metal by about 60 per cent. In the rim of this

Digitized by Google

piston are several small grooves filled with babbitt-metal, to make a better rubbing surface.

Drawings II. and III. show cast-steel box-pistons. In general, a hollow steel casting must have larger openings for "venting" and for removing the cores than are necessary with iron. In II., then, the body and rim are made separate, and put together with a screwed and riveted joint. In III. the rim is a cast-iron ring, held in place by a narrow steel follower-ring, which may be riveted as here, or bolted fast. This design resembles Fig. 274 IV. in the ease of renewing the rim.

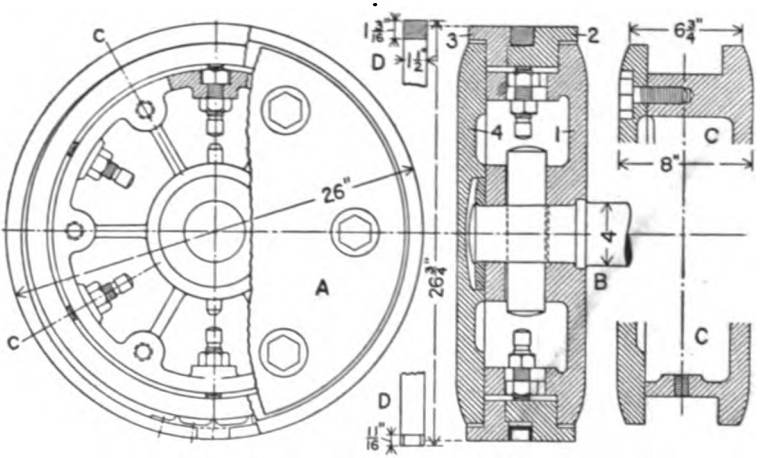

FIG. 276.—Built-up Piston, for Corliss Engine in Fig. 210. Scale 1 to 12.

(*d*) BUILT-UP BOX PISTONS.—A type of piston which has long been used in engines of the Corliss class is well represented by Fig. 276. In this there is first the ribbed body or "spider" 1, into which the rod is securely fastened; then the rim or "bull-ring" or "junk-ring," which carries the packing-ring; last, the follower-plate 4, held fast by six tap-bolts. The bull-ring forms the working surface of the piston, and can be adjusted by set-screws so as to make the axis of the piston agree with that of the cylinder. It is made in two parts, 2 and 3, partly because the packing-ring is rather too stiff to be "sprung" over the piston in order to get it into its grooves, partly because access can now be had to the packing-

Digitized by Google

ring without withdrawing the piston from the cylinder-bore. The rod has a taper fit against a collar, is held by a cotter, and is riveted at the end, over a heavy washer: note how the slot for the key cuts through the rim of the piston-body at both sides, making necessary a special arrangement of the set-screws on this diameter. The packing-ring is of the tapered form, and the "keeper" which joins its ends is more fully shown in Fig. 280 IX.

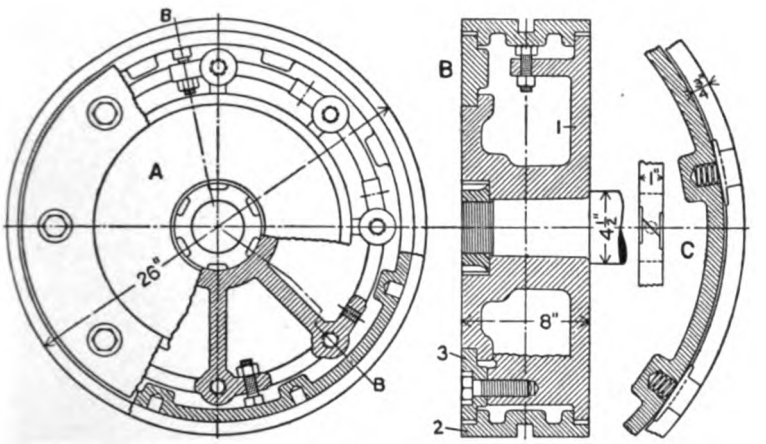

FIG. 277.—Piston for 26" by 48" Corliss Engine, Figs. 213, 241. Scale 1 to 12.

In Figs. 277 and 278 are given further examples of the type just described, which sufficiently represent the possible variations in form. Fig. 277 has the bull-ring all in one piece, with set-screw adjustment, and only an annular follower-plate. The packing-ring is made in segments and pushed out by a spring under each of the keepers which form the joints. In Fig. 278 the follower forms half of the bull-ring, the two halves fitting together tightly with a recessed joint, but having considerable play on the piston for adjustment. The latter is determined by the two little blocks marked 4 on view A: of the seven slots in the ring 2, only two are thus filled, at the bottom where the blocks will carry the weight of the piston; and the screwing-up of the follower-bolts grips the whole structure tightly together. Here a continuous packing-

Digitized by Google

ring (with one joint) is used, and its elasticity is supple by flat springs as shown at C.

The purpose of this latter design is partly to make the p rings removable without disconnecting the rod from th head or disturbing the alignment of the piston in the c For this purpose, the follower, as also the packing-ring a the little blocks 4, 4, have tapped holes in them for the ins eye-bolt handles. Always the piston is provided with thi of getting a good hold when taking it out of the cylinder—a for instance, in Fig. 6.

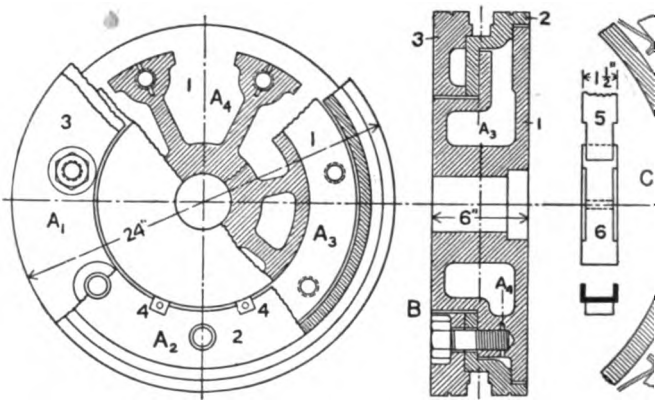

FIG. 278.—Reynolds-Corliss Piston, Allis-Chalmers Compan Scale 1 to 12.

It is important, as a matter of practical convenience, follower-plate be easily removable, or that the bolts s rust fast. Steel tap-bolts in cast iron, or steel nuts on stud satisfactory if the joint is opened at short enough interva quently, however, a screw-joint with bronze on steel is either by the use of bronze nuts on stud-bolts, or by tap-bolts into blocks of bronze which are let in from the recesses in the piston-body. Note how the studs are se pins in Fig. 278, so that they will not come out with the r

(*e*) SOLID-DISK PISTONS.—Simple cone-disk pistons marine type are shown in Fig. 260. Usually the single-disk when used in a vertical engine, and especially with an

Digitized by Google

piston-rod, has a much narrower rim than a piston of the same diameter would have in a horizontal engine. An extreme case is seen in Fig. 279 I., where the packing-rings, self-elastic, form the

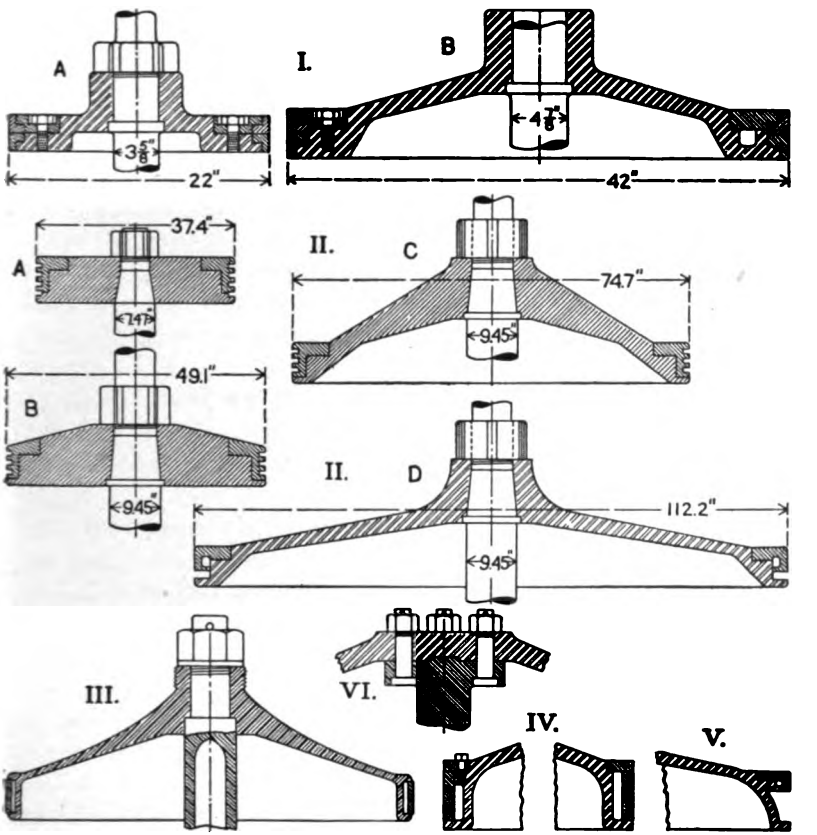

Fig. 279.—Pistons of the Marine Type.

I. Vertical compound Buckeye engine, 27" stroke, scale 1 to 16; II. Pistons from one of four engines on the steamer "Kaiser Wilhelm II.," with 70.8" stroke, scale 1 to 36; III. Forged steel piston, about 24" in diameter, for torpedo-boat; IV., V. Saving weight in the rim; VI. Special form of rod connection.

whole surface of the rim. These pistons are steel castings, with follower and spring-rings of cast iron.

The group of pistons in Fig. 279 II. belongs to a large three-

Digitized by Google

crank quadruple-expansion engine, with the high-pressure cylin placed tandem above the first intermediate. The smaller pis are made thick and heavy as a part of the scheme of balancing engine. Note the arrangement of the combined bull-rings followers, whereby all the packing-rings can be removed with disturbing the pistons. On the first three pistons, plain snap-r are used; the low-pressure has a flexible (segmental) ring, bac by springs, of the type shown in Fig. 280 XI.

In Fig. 265 is seen a piston which may be considered a deve ment from the marine type, being made of two cone-disks combi into the hollow, box form and held together by the nut on piston-rod. This method of making a hollow piston in two p is much better, with cast steel, than to try to core it out. Ano example of the same general type of construction is partly sh in Fig. 281 III.

The most usual type of piston in large stationary engine probably the box form, with parallel faces and made of cast i the rim arrangement being of the type in Fig. 278, modified to the simple device used on Fig. 279 II.

The extreme of lightness is seen in the forged-steel piston at 279 III.; and rim-sections without any dead weight, for pistons, are shown at IV. and V., both from naval engines. Fin at VI., is illustrated a peculiar method of fastening piston and together, which has been used in small marine engines, but w does not seem to have any advantage over the usual arrangem The piston at III., instead of being tapped for lifting-bolts, has hub threaded on the outside, so that a lifting-ring can be scre upon it.

(*f*) STRENGTH OF THE PISTON.—Taking this piece in its simplest form—the single-disk type—it is possible to mal reasonably close calculation of the stress due to a certain st pressure: but even here there must be simplifying assumpt which cause rational methods to be only approximate. With more complex, hollow pistons, only a rough guess at the stre can be made by calculation; so that empirical data, or the follo of established good practice, is the chief resource of the desig This is one of the numerous cases where each machine tha

Digitized by Google

built is, in a sense, an experiment; therefore the development of good design has been largely a matter of evolution.

As always in the designing of a casting, there is here plenty of room for the exercise of good judgment. Thus it would be distinctly bad engineering to put a circle of core-holes in the face and of holes through the ribs at the same radial distance from the axis, especially if this radius is relatively so short that a large fraction of the metal in the face is removed. In this connection may be mentioned the occasional use of a sort of stay-bolt, made up of two core-plugs united by a shank, to tie together the faces of a hollow piston.

In rare cases the transverse face of the piston is not a surface of revolution: examples are described or illustrated in *Power* for Nov. 1899 and Feb. 1905, and in *Engineering* for Dec. 11, 1903. The first is a Corliss engine with the valves in the heads and projections upon the cylinder which fill the port-spaces; the second is a large blowing-engine, with piston-valves lying across the heads in the air-cylinder, and the piston conformed to the outer shape of the valve-casings. In such a design it is absolutely essential that the piston be secured against ever getting loose and turning on its axis.

(*g*) THE PISTON-ROD.—The chief point of interest in the construction of this simple piece is the manner of securing it to the piston and to the cross-head. At the piston, the most common fastening consists of a cone-fit and a nut. With a long taper, of 1 in 20 to 1 in 40, the piston is fitted against a shoulder, to limit the wedge-action of the rod, which would otherwise be likely to burst the piston. This shoulder may be formed by a reduction in diameter, as in Figs. 254, 256, and 277; but more usually, and better, there is a collar on the rod, as in Figs. 247, 251, 274 IV., 275 I., and 276. With a shorter cone the shoulder can very well be omitted, as in Figs. 267, 270, 274 I., etc.; although examples of a short cone in combination with a collar are given in Figs. 260, 265, and 279 II. In Figs. 6 and 281 III. are seen related designs with cone-fit and screw, all within the piston-hub. Parallel or cylindrical fits are sometimes used, as illustrated in Figs. 274 III., and 294; while Fig. 274 II. shows a simple screwed joint,

Digitized by Google

with a collar and a safety-rivet. The keyed joint, as in Fig. 276, was formerly quite common, but is now rarely used at the piston. The nut may be wholly sunk into the piston as in Fig. 277, or partly as in Figs. 247, 256, 267, etc.; and may either be of the hexagon form or be slotted for a spanner-wrench.

At the cross-head, glancing forward to Figs. 282 to 297, we see that in stationary engines the rod is usually screwed into the head and secured by a jam-nut; though sometimes the threaded hub is split and clamped upon the rod, as in Figs. 290 and 297. In the locomotive the cotter fastening is used almost altogether, as seen in Figs. 286 to 289. With the marine cross-head, Figs. 293 to 295, radically different from the other types, a joint similar to that at the piston is usual.

Strength of the Rod.—The piston-rod is subjected to rapidly alternating tension and compression, and must therefore be designed for a low working-stress. The compressive force, which the rod resists as a "column," with a tendency to yield by bending out of line, is the more severe in its effects; so that if the body of the rod is made strong enough for compression, a smaller cross-section can be used at the ends, in the fastenings, where simple tension is the predominant stress. But a sudden reduction in cross-section where the rod enters the piston is not a good feature, because any secondary bending action will tend to concentrate a heavy stress at this point, and thus be likely to cause breakage. With the short cone and no collar, Fig. 267, etc., there is a very considerable enlargement at this point. But cases where an enlargement of section is used even more avowedly for the purpose of getting increased strength against bending are seen in Figs. 256 and 289. In the former especially the maximum of stiffness is aimed at, because the general arrangement of the engine is such that at the cross-head the rods may have to resist very strong bending actions. They are in this case made hollow, so as to be as strong as possible for a given weight. These hollow rods, of nickel-steel and closed at the ends, are first forged with enlarged ends, drilled, and rough-turned on the body; then the ends are heated and hammered down, and the rod finished after whatever of oil-tempering and annealing is required.

Digitized by Google

The form of the piston-rod in tandem-compound engines is shown in Figs. 263, 279 II., and 438, with a reduced diameter for the part extending to the second piston. And the same arrangement is generally used when the rod is merely extended through the head for the sake of better guiding and support of the piston, as in Fig. 274 II. and III. and Fig. 279 II.; although sometimes, in horizontal engines, the tail-end is kept at full size, or the whole rod even enlarged and made hollow for greater stiffness, especially when a little carrying slide-block is placed under the outer end, as in Figs. 267 and 221.

(*h*) PISTON PACKING.—In the very earliest practice, a soft packing of hemp was wound around the piston-rim. With better facilities for machining the cylinder-wall, and especially with higher steam-pressure, metallic packing soon came into universal use. Almost always, this consists of flexible packing-rings, held in grooves in the piston and pressed outward either by their own elasticity or by separate springs behind them. The rings are generally made of hard, close-grained cast iron, although steel is sometimes employed and brass used to be. Occasionally the rings are made solid (uncut or with ends joined), and changed or adjusted as wear occurs. In connection with piston-rings, two matters are to be considered: first, the production and regulation of the requisite pressure between rings and cylinder-wall; second, the design of the ring-joint, which should not leave a gap for the passage of steam.

Self-elastic Rings.—Experiments made soon after the introduction of the plain snap-ring showed that a pressure of three or four pounds per square inch of contact-surface was enough to prevent leakage. The discussion of the elasticity of spring-rings and of the flexure necessary to a given pressure will not be taken up here; though some idea of practice can be got from sketches I., II., and III. in Fig. 280, where the free diameter of the ring is marked. Sometimes the ring is tapered toward the ends, as in Figs. 276 and at I.; more frequently, perhaps, it has a constant cross-section. In most cases the ring is turned to the larger diameter and pressed into the cylinder after a piece has been cut out; but a rather more uniform pressure can be got, as in Figs. 279 I.,

Digitized by Google

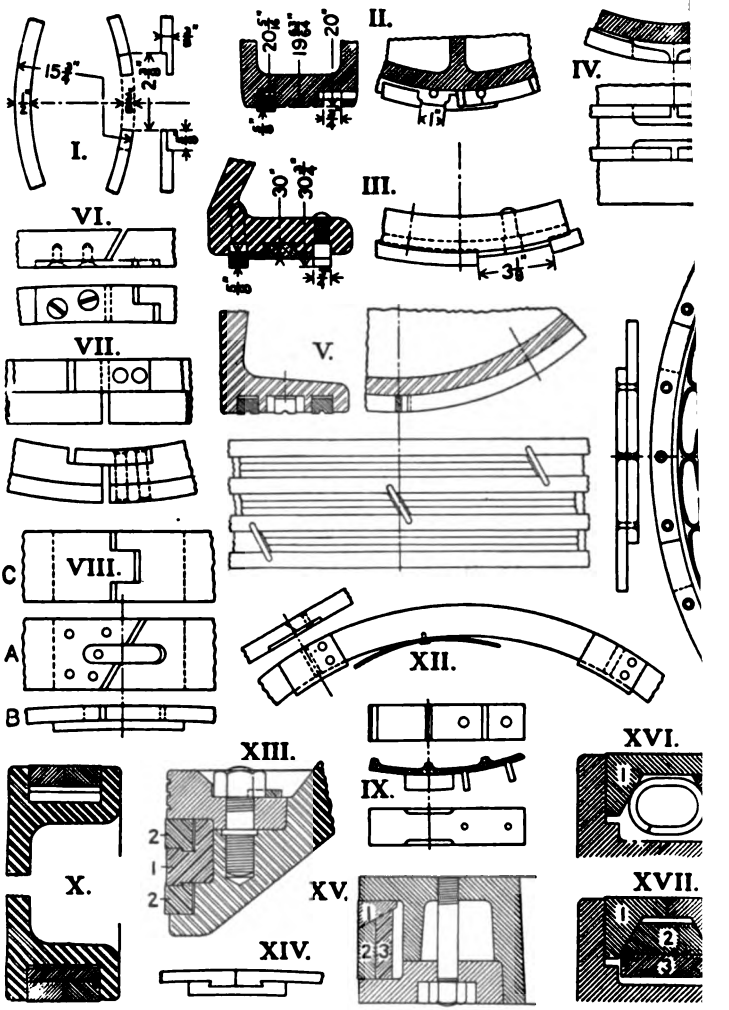

FIG. 280.—Details of Piston-packing.

I. Ring for 15″ piston, Fig. 251; II., III. Details from Figs. 247 ar IV. Ring-joint in Fig. 274 IV.; V. Detail from Fig. 274 II.; VI for ring in XIII.; VII. Detail from Fig. 279 I.; VIII. Joints fc broad rings, for large pistons; IX Ring-keeper from Fig X. Marine piston with steel spring-ring back of cast-iron ru rings; XI. Type of ring used in low-pressure piston, Fig. 2 XII. Ring for large vertical Corliss engine, Fig. 272; XIII. Res rings, British Navy practice; XIV. Type of self-restrained XV., XVI. Wedge devices, for restraint of ring and to keep from getting under ring.

Digitized by Google

by cutting out a shorter piece than will let the ring close in to the diameter of the bore, then carefully clamping the ring to a face-plate and bringing it to size with a light finishing cut.

Rings with Springs.—In Figs. 278 and at X. we have examples of the continuous (one-piece) ring with spring backing: in this case the ring is turned just to the cylinder-diameter and sawed across. The joint at VIII. A is suitable for a ring of this type, while that at C would be made in a ring which depended partly upon its own elasticity. Rings in segments are illustrated in Figs. 277 and 280 XI. and XII.; this type of arrangement shows great variety as to the form of the segment and as to the kind of spring used. Always, provision must be made for holding the springs in place and keeping them properly spaced. In Fig. 277, each keeper has upon it a little stud which projects into the center of the helical spring; in Figs. 278 and 280 XI. the springs fill the whole annular space; in XII. the spring is intentionally fastened off the middle of the segment, toward the end where the keeper is riveted fast. Another type of spring is seen at XVI.; and the continuous corrugated ribbon, or wave-spring, as in Fig. 281 II. C, is sometimes used.

Grooves in the Contact-surfaces.—When a fluid is flowing through a long narrow channel, the current is effectively broken up and its velocity greatly checked by occasional abrupt enlargements of the channel. This principle can be applied by cutting small grooves in the piston-face, as at II. and XIII., or even in the surface of the ring, as at V.; and another application is seen in Fig. 281 IV.

Ring-pressure Due to the Steam.—The pressure actually existent between packing-ring and cylinder-wall really depends, in most cases, not so much upon spring-action as upon the pressure of the steam. The ideal condition is to have the ring fit its slot very closely, being free to move, but not letting steam leak into the space behind it. This kind of leakage is very hard to prevent; so that, during a part of the stroke at least, the ring is likely to be very strongly pressed outward, with undue friction and wear as the result. In some lines of practice, holes have even been drilled through the side of the piston into the lowest part of the slot, to

Digitized by Google

let the steam get in and push the ring out. At the opposite extreme of practice lie the various devices for restraining the rings and for more effectively keeping the steam out of the slot, as illustrated in Fig. 280 XIII. to XVII.

Restrained Rings.—At XIII. is seen a design in which the packing-rings 2, 2, are formed with a shoulder, and restrained from undue expansion by collars on the solid steel ring 1—the whole system being removable without disturbing the piston-rod connections. In this case, new rings would be given just enough play to let them wear to a good surface, after which they would be practically solid rings. The idea of a self-restrained ring is represented by the sketch at XIV.: this type of coupling has been used, as also the oval link, like that in Fig. 326 II. Fig. 280 XV. is typical of several patented designs; ring 1 is solid, 2 is a rubbing-ring without spring, 3 is a strong spring-ring. By proper adjustment at the start, ring 2 can be left free just to wear to a good fit in the cylinder; whereupon, as is claimed, the slight amount of wear which takes place on the side surfaces in the slot will allow enough expansion to keep the piston tight, the slant between the rings being accommodated to different conditions of service. This slant also serves to wedge the rings fast in the slot and prevent side leakage.

Side-wedge Action.—This idea of keeping the steam from getting behind the ring has led to a number of designs, which are typified by XVI. and XVII., both examples being intended for vertical engines with extended piston-rods. At XVI. the spring is a helix of elliptical cross-profile, coiled on a straight axis, then bent around the cylinder; at XVII. there is a cast-iron wedge-ring 2 and a steel spring-ring 3. In either case, the pressure upon the oblique surfaces has a larger component to force the halves of the rubbing-ring apart, against the sides of the slot, than to force the whole ring outward. It is said that these arrangements are quite effective in diminishing friction and wear; they are all of European design.

Ring-joints.—Turning now to the ring-joint, and running over the examples given in Fig. 280, we have the simple butt-joint in II. and III., with provision made for holding the two joints near the bottom of the piston, where its weight is depended upon to hold it down and prevent steam from getting to the gaps in the

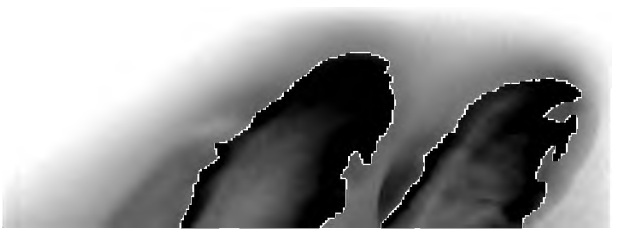

Digitized by Google

rings. The arrangement at V. is essentially the same, except in the use of little stop-plates, set into slots which are partly milled out, then finished by hand. In IV., as also at IX. and XII. and in Fig. 277, we see the use of little brass keepers to form the joint: these are surest to close the gap when riveted to one of the ring-ends, or when right over the springs; so that IV. depends upon the weight of the piston, as do all the other locomotive designs shown. In general, these keepers serve to prevent leakage and to make the ends match; and both these functions are taken by the little side plate in VI. Where two rings are together in one slot, they can always be placed so that the joints are far apart, and no lap at the joint is then needed: examples of this arrangement are seen at VII. and X. In VIII., the cover-plate fastened inside the joint is called a "palm"; and with it some form of tongue or lap is used to bridge the gap.

(*i*) PISTON-ROD PACKING.—For use in stuffing-boxes, around piston- and valve-rods, soft or fibrous packing was long the only material employed; and it is only in comparatively recent times and under the more severe conditions of service and pressure that metallic packing has been coming into general use. Formerly, loose strands or braids of hemp soaked in tallow were used; now there is a host of ready-made packings on the market, in uniform and graded sizes so as to fit and fill the stuffing-box neatly. These are made of vegetable fibre, asbestos, or rubber, in various combinations, with graphite frequently incorporated as a lubricant.

The Stuffing-box.—Examples of the common stuffing-box have been given in Figs. 6, 250, 251, 253, 262, 263, 267, 269, etc. Always there is an annular space around the rod, closed by a flanged bushing called the "gland," which can be screwed down to compress the packing. Sometimes the confining end-surfaces are flat, as in Fig. 269; oftener, one or both are made conical, so as to force the packing more closely against the rod. To allow for initial or acquired faults in alignment and for wear of the sliding surfaces of piston and cross-head, the rod must fit but loosely where it passes through the cylinder-head and the gland. Very often bushings of brass or linings of babbitt-metal are used, as can be seen in the examples just cited. Of course, the clearance must

Digitized by Google

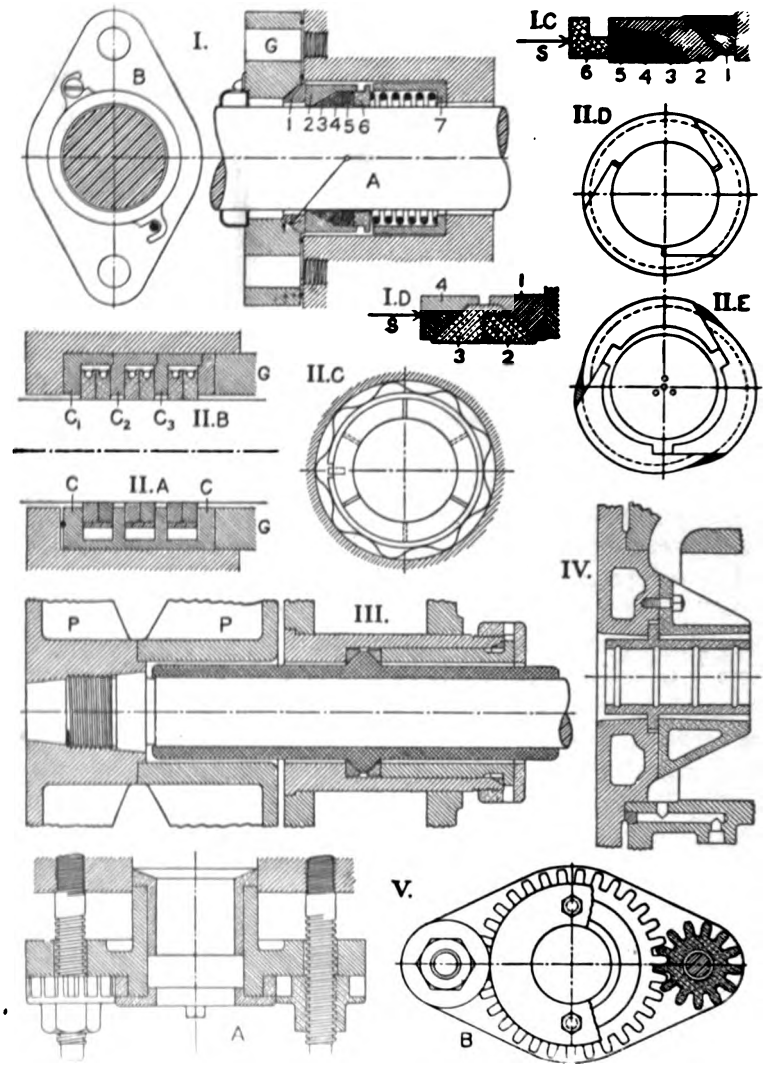

FIG. 281.—Types of Piston-rod Packing. I. "United States" metallic packing; II. Various ring-packings; III., IV. The plain solid bushing; V. Gland with geared nuts.

Digitized by Google

not be wide enough for the packing to squeeze into it. A very simple and effective device is to use brass rings as in Fig. 269, making them fit the rod quite closely, but with as much clearance at their outer circumference as the rod has in the head and gland.

Metallic Ring-packing.—The metallic packing belonging to Fig. 247 is drawn to a larger scale in Fig. 281 I. The gland G is here a mere heavy cover-plate, made tight by a copper-wire ring-gasket. The ball-ring 1 is seated upon the gland with a spherical ground joint; the casing 2 is free to move sidewise, and contains the three babbitt-metal packing-rings 3, 4, 5, which are the only parts that touch the rod. These, as pieces requiring comparatively frequent renewal, are made in segments so that they can be put in without disturbing the rod-connections, and are placed in the cup so as to "break joints." The follower 6 is pushed up by the spring, which is itself held in the light casing 7. This spring is not expected to do much more than hold the rings in place: it is the steam-pressure that wedges the rings into the cup and makes the joint tight, so that the tightness of the joint varies with the pressure of the steam to be held.

The same packing, with different proportions, is shown in detail at I. C—the difference consisting in the slant of the confining surfaces of the cup, which causes all the rings to come into action, although the first one still takes most of the wear. And at I. D is given the detail of another packing of this same wedge-action type, with brass rubbing-rings.

Collar-rings.—Another type of ring-arrangement is represented by the two examples given in II.: the rings have parallel faces and are held between the collars of a cast-iron casing, and the segments are pressed inward upon the rod by peripheral springs. In the design shown at A and C, each ring is divided radially into three segments, and the two rings in one compartment break joint, being kept in place by little dowels which project into the gap in the elastic confining-ring. With this arrangement, the casing must be made in halves, divided lengthwise; and as the figure is drawn there is hardly room for the needful clamping device to hold the halves together. At B, D, and E the springs are helical, and form elastic bands around the rings. The form of the seg-

Digitized by Google

ments and the manner in which the ring can open and close shown at D and E. These ring-packings are made in a g variety as to form and arrangement. Very often there are sev complete sets of rings, the space between them being used lubrication or for the draining away of water. On vertical eng especially there is a strong tendency to leak water around piston-rod. In *Power* for April 1902 is given a full descrip of a great number of packings of this general type.

The Solid Bushing.—Another form of metallic packing, plain solid bushing, is shown at III. and IV. The first is f SWEET'S "Straight Line" engine, and has a high degree of acc modation to any irregular movement of the rod. The long, c sliding fit between the rod and the babbitt sleeve effectively vents leakage. In this case the piston P is made in halves, one of these is recessed to make room for the bushing. arrangement at IV. is used between the cylinders of a close-c nected tandem-compound locomotive—see Fig. 438. The bush of bronze or hard brass, can adjust itself sidewise: and in arra ments of this sort, long used in pumps like that in Fig. 228, wear has been found to be almost imperceptible.

The materials used for the rubbing surfaces of packings of several types shown are, hard babbitt metal, brass or bro and cast iron: they must be all of such grade and finish that t will not cut or score the rod.

The last drawing in Fig. 281, at V., shows an arrangem sometimes used on marine engines with fibrous packing: two nuts are connected by gearing, with assurance that the gl will always be kept "square" with the rod.

(*j*) THE CROSS-HEAD.—The three typical forms of this p are well represented by the next three figures. In Fig. 28 shown a four-bar cross-head (to be held by four guide-bars, t is); and from the way that the two slide-blocks project sidew we shall call this the wing type. It can be seen in place in Fig. II. and III. and Fig. 216; but it is far less common than forme now that enclosed guides are so generally used. The most p alent form, the block or trunk type, is represented by Fig. 2 the essential feature being that the guided surfaces are above

Digitized by Google

below the cross-head, central in the plane of the engine mechanism. The one-sided slipper cross-head is shown in Fig. 284, here intended for a non-reversing engine, and with comparatively little bearing-surface on the top of the sole-plate. The fourth example, given in Fig. 285, is a modification of the last type, the cross-head surrounding the guide-bar, instead of being partly enclosed by the guiding surfaces.

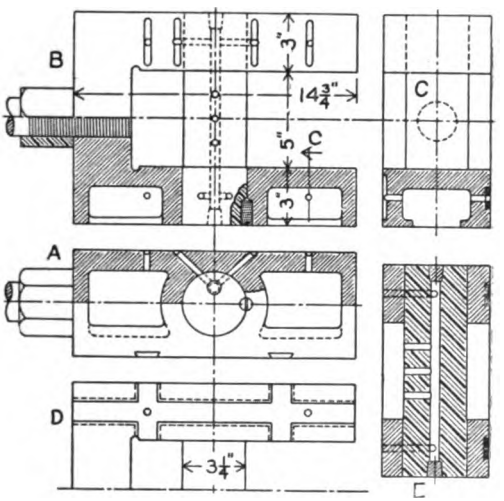

FIG. 282.—Four-bar or "Wing" Cross-head, to fit guides shown in Figs. 237 and 298. Scale 1 to 10.

In general we note that any cross-head has the two functions of joining the connecting-rod to the piston-rod and of sliding upon or between the guides: it consists therefore of the body, which begins with the hub for the piston-rod and is usually forked to receive the wrist-pin; together with the sliding surfaces or shoes, of whatever form. Except in locomotives, the piston-rod is nearly always screwed into the hub and clamped by a jam-nut or equivalent device. As to the wrist-pin, we have here two examples of cylindrical fits, two of taper fits. In Fig. 282, for a connecting-rod with strap end, the pin is mabe with a driving fit and held by a screw-key; in all the other examples, the pin is easily removable, as it must be taken out in order to break connections, with a solid-end rod. Usually, the wrist-pin is made of machinery steel, often case-hardened and ground; but in Fig. 284 it is of hard cast iron, hollow for lightness, and arranged so that it can be turned through a quadrant occasionally, to equalize wear.

In Fig. 282 the whole piece is of cast iron, and the principal,

Digitized by Google

bottom rubbing surface is composite, the grooves (m
shown at D) bei
with babbitt-met
283 has a cast-st
and brass shoes.
3 and 4 the cros
all of cast-iron;
Fig. 284, the bo
cast steel and th
cast iron or
preferred. Fig.
cast-iron patter
babbitt facing
lubrication arra
are fully shown
282, consisting o
in the upper
which gather oil

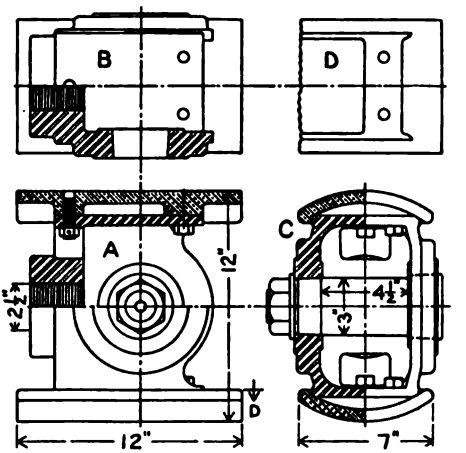

FIG. 283.—Cross-head of "Block" Type, for Fig. 238; compare Fig. 263. Scale 1 to 10.

top guide-bar and feed it to the wrist-pin, as shown a
to the lower slide. In some of the figures which follo

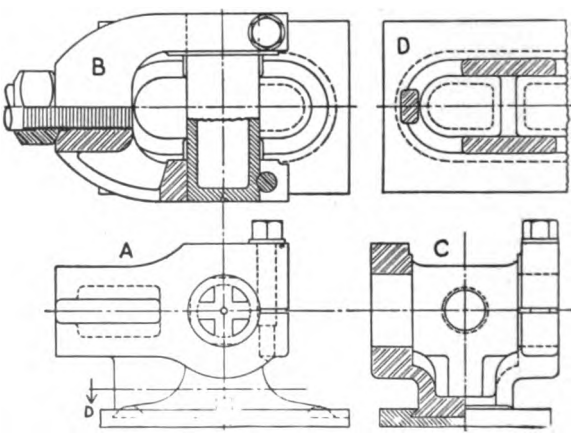

FIG. 284.—Slipper Cross-head, detail from Figs. 8 and 4

details of this sort are omitted, because they would und
plicate the drawings.

Digitized by Google

(*k*) LOCOMOTIVE CROSS-HEADS.—For this class of engines, by far the most common form of cross-head is the modification of the block type shown in Figs. 286 and 287. The first example is a good standard design, very generally used; the material is cast steel, for both body and shoes; and the latter are lined with a coating of pure tin, which is put on like a solder, adhering of itself to an acid-cleaned surface. The top view D is intended to bring out most clearly the strength of the fork; E is a view of the shoe from the inside, showing the recesses which receive the flanges of the body; while F is a detail of the piston-rod joint. In the second design, reduction of weight is made a prime object; and advantage is taken of the fact that the lower surface, which presses upon its

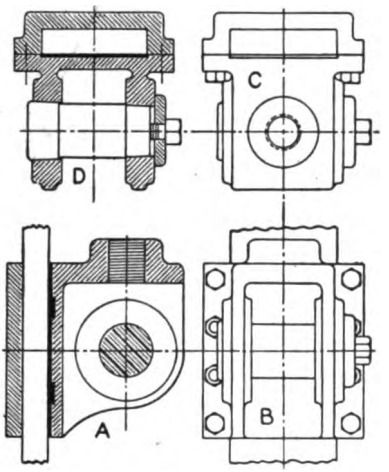

FIG. 285.—Slipper Cross-head "Inverted," surrounding the guide-bar, from Fig. 202.

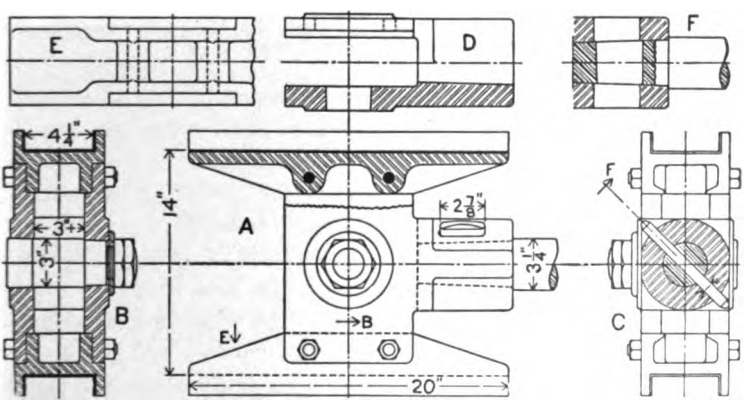

FIG. 286.—Standard "Alligator" Cross-head, for 20" by 24" locomotive, Fig. 247. Scale 1 to 12.

Digitized by Google

guide-bar only in reversed running of the engine, is very little used, and can therefore be made much smaller without danger of excessive wear. Further, in order to shorten the guide-bars at the back end, the shoes are set forward from the center-line of the wrist-pin. These shoes are of brass, which is likewise often used in designs like Fig. 286. On general principles, it is better to have the pin central in the slide-block, for only thus can a uniform

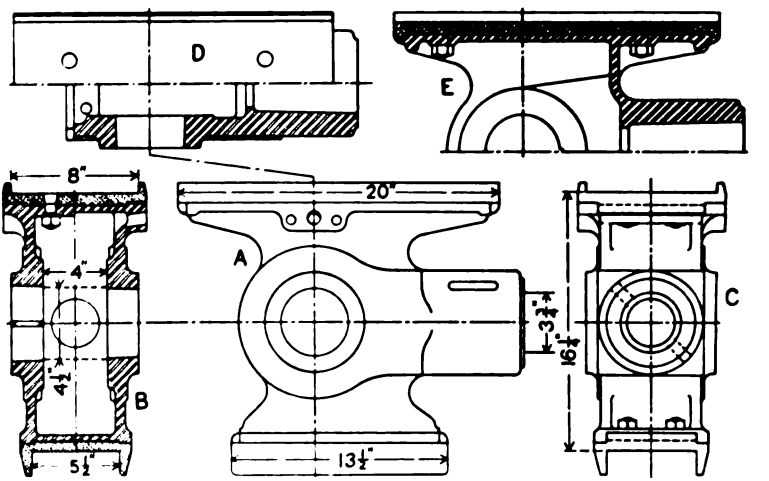

FIG. 287.—Special Design Alligator Cross-head, for 19" by 26" fast-running locomotive. Scale 1 to 12.

distribution of the bearing-pressure be secured; but a moderate amount of eccentricity does no great harm, and is not infrequently seen, especially in marine engines. Cross-heads are proportioned for a maximum bearing-pressure, near the middle of the stroke, of from 40 to 60 lbs. per sq. in. upon the guide-bars.

Slipper-type Cross-heads.—The usual form of the slipper cross-head for the locomotive is shown in Fig. 288, where the brass shoe, made hollow to save weight, works between two bars and is held to the body by tightly fitted through-bolts. The top bar exerts the guiding-force in former running; the lower one serves to keep the cross-head from moving out of line sidewise, the flanges which unite the shoe to the body of the cross-head being lined

Digitized by Google

with thin brass plates, riveted fast. The main bearing-surface, on the top of the shoe, is composite; shallow pockets are drilled in the brass and filled with babbitt metal.

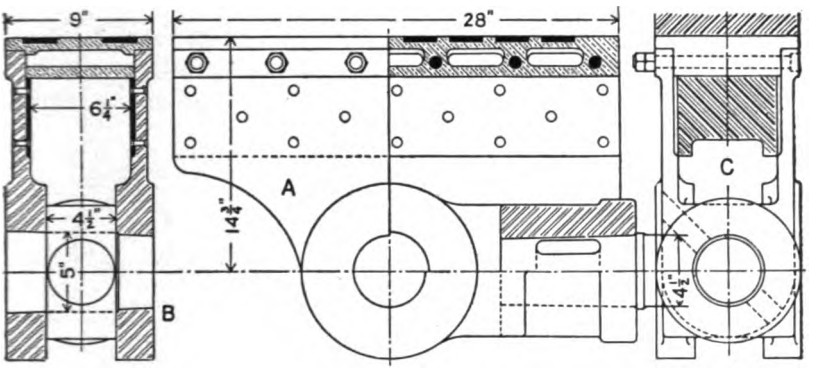

FIG. 288.—Slipper-type Cross-head, for extra big freight locomotive, 19" and 32" by 32" tandem-compound. Scale 1 to 12.

The design in Fig. 289 is rather out of the usual line, approaching the marine type of slipper cross-head—compare Figs. 295 and

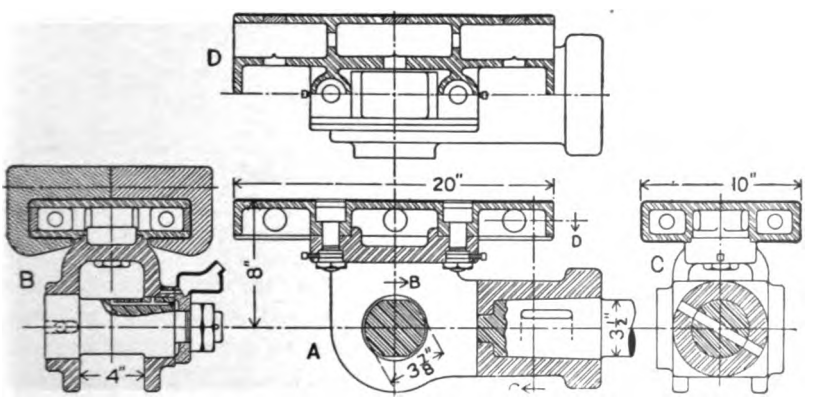

FIG. 289.—Locomotive Cross-head of the Marine Type, Pennsylvania Railroad express engine, 20½" by 26". Scale 1 to 12.

299. The broad, thick shoe or sole-plate is a light steel casting, coated with tin about $\frac{1}{16}$ in. thick. The bolts must transmit the

Digitized by Google

full guiding-force in reversed running, and are therefore ma
ample size.

Piston-rod Connection.—A notable feature of all these c
heads is the fact that the piston-rod is held by a cotter, ch
it appears, because this form of joint can be most easily t
apart, while offering a high security against shaking loose. T
are two typical arrangements of the joint; in Figs. 286 and

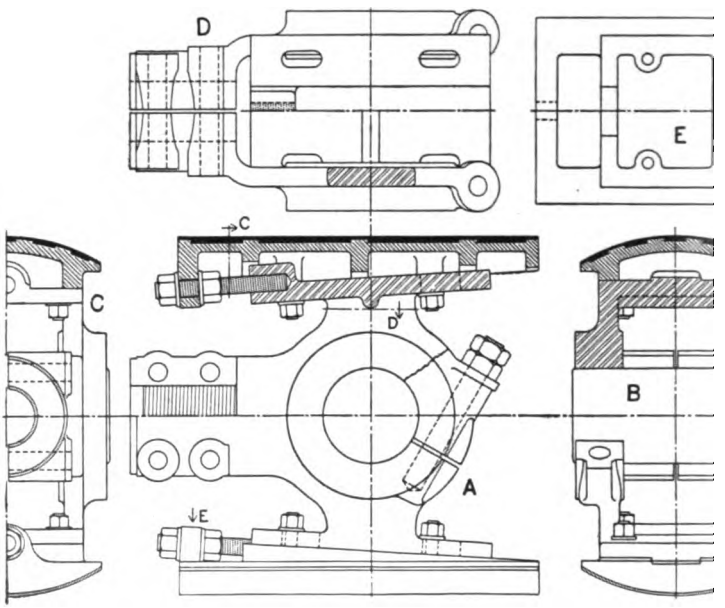

Fig. 290.—Cast-steel Cross-head, vertical Buckeye engine.

the entrance of the cone into the hub is limited by the sho
on the rod; in Fig. 289 the end of the rod seats itself upo
bottom of the hole. In the first case, driving the key in
will develop a heavy initial tension in the rod, most severe w
the cross-section is reduced by cutting out the key-slot. I
second case, the key simply compresses the tip of the rod,
only the tension due to the steam-pressure is felt by the met
the rod. Careful work is needed, of course, to insure that co
and shoulder-fit shall coincide in tightness.

Digitized by Google

(*l*) Cross-heads for Bored Guides.—This is the most common type for stationary engines, as already stated; and except in small engines there is some form of wedge-arrangement for adjusting the shoes. Fig. 290 has a broad bearing upon the body for the shoe, which is adjusted by an inclined screw and then strongly clamped by four stud-bolts. The inclined supporting surface is much smaller on Fig. 291; and the clamping-bolts are relatively

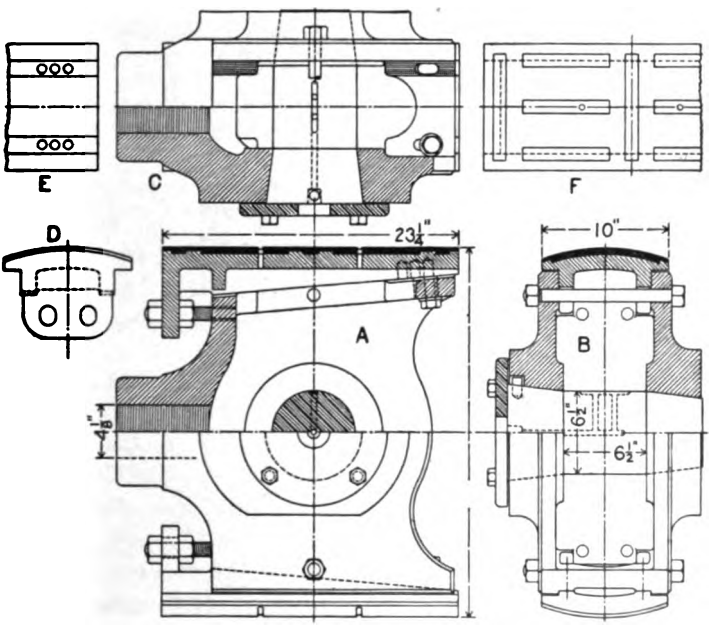

Fig. 291.—Cross-head for Corliss Engine, to go with piston in Fig. 278. Scale 1 to 15.

less strong, so that more dependence is placed upon the adjusting-screws for driving the shoe back and forth with the cross-head. In Fig. 292 there is a separate wedge between body and shoe, and the latter is held in place by its own end-flanges and has no endwise movement in adjustment. These three arrangements represent the typical variations in the great number of designs that have been gotten out.

Digitized by Google

The body of the cross-head in Fig. 290 is of cast steel, with weight of metal reduced to a minimum, and the shoes are of c iron. Note the clamping-devices for gripping both piston-rod a wrist-pin. Figs. 291 and 292 are both designs for cast iron, l they can easily be enlarged and reduced in relative thickness wl steel is to be used, for bigger and faster engines. A special feat of Fig. 291 is the way that the wrist-pin is held in place.

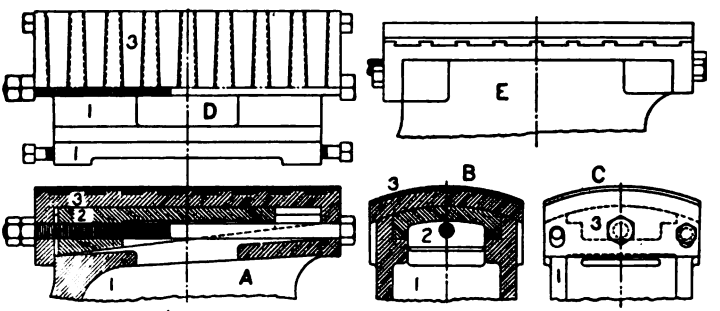

FIG. 292.—Corliss-engine Cross-head with separate wedges.

The manner of securing the facing of anti-friction metal is sho in detail in each of these examples. In general, the alterna dovetails on shoe and babbitt-shell are narrow, so that the lat is held fast in small portions. In Figs. 290 and 292 there is approximate equality between the amounts of thin shell over t ridges and of thick shell in the grooves of the shoe. Fig. 2 shows the thin shell predominating, while the opposite proporti is seen on Fig. 295. On Fig. 292 the dovetails are tapered, so th shrinkage of the whole shell in cooling will draw them tight, a compensate for their own shrinkage—for even though babbi metal expands in solidifying, it must contract somewhat in cooli down from the melting-point.

(*m*) CROSS-HEADS FOR MARINE ENGINES.—Our three typic forms of cross-head, as adapted to marine-engine conditions, a exemplified in Figs. 293 to 295. Practically without exception, is here the connecting-rod that is forked, not the cross-hea therefore the body of the latter becomes a plain block, throug which the end of the piston-rod passes; and the two pins are i

Digitized by Google

the form of gudgeons, like trunnions, on the sides of this block. Then the four-bar cross-head takes the shape in Fig. 293, an engine

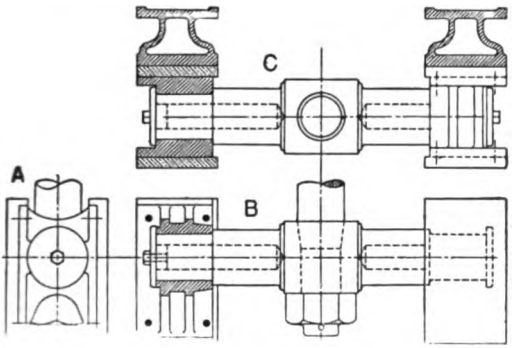

FIG. 293.—Marine Cross-head of the Four-bar Type, Dutch cruiser with cylinders 33″, 49″, 74″ by 39″. Scale 1 to 24.

with this arrangement being shown in Fig. 233. In Fig. 294 the shoes are cast pieces, bolted to the block; this type is generally used when the engine has A-frames, as in Fig. 232 (although that

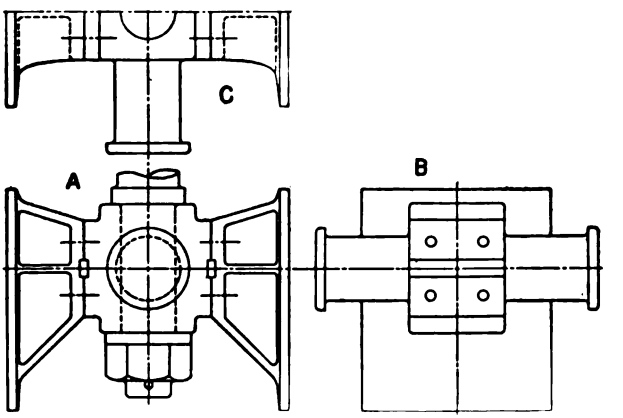

FIG. 294.—Marine Cross-head of the Block Type, French battleship, cylinders 44.5″, 67″, 105.5″ by 43.2″. Scale 1 to 24.

engine has slipper cross-heads). A good example of the third type, now most prevalent, is given in Fig. 295; here the slipper 2 is of forged steel, as well as the block 1, and the web can be made so thin

Digitized by Google

that the surface of the backing or top guides (see Fig. 299) is not much less than that of the forward or bottom guide. As it happens, these examples are all from warship engines, where it is of first importance that the total height of the machine be kept down; and all have the rubbing-surface central below the wrist-pin. In merchant ships, however, the slide is usually made symmetrical.

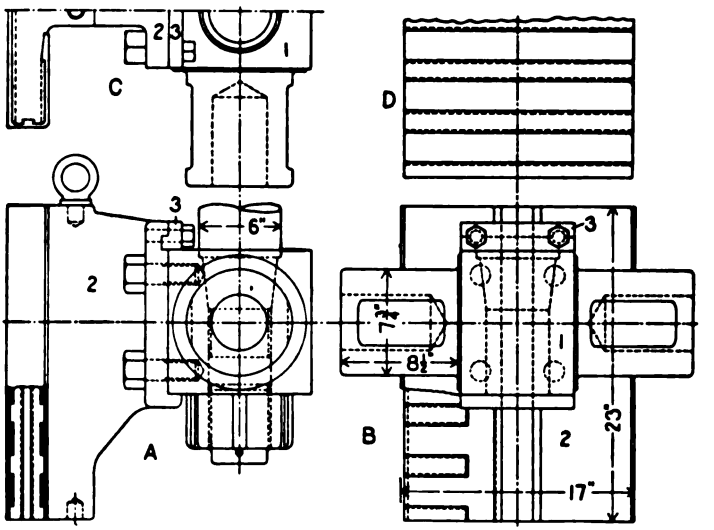

FIG. 295.—Slipper Cross-head, U. S. Battleship "Mississippi," 25½", 42", 60" by 48" (four engines). Scale 1 to 14.

The Wrist-pin Fast in the Rod.—Many marine engines of the smaller sizes have the wrist-pin joint made as in Fig. 296, where the pin is held in the forked connecting-rod, and the cross-head, which is forged in one piece with the piston-rod, carries the bearing. This particular example is from a small stationary, non-reversible engine, designed along marine lines; therefore very little holding-down surface is needed on the top guides.

The unique design in Fig. 297 fills what would otherwise be a gap in the list of typical arrangements, supplying a solitary example of the combination of a forked cross-head with a wrist-pin fast in the connecting-rod. The cross-head as a whole is a very light steel casting, and the lower half of the hub, shown at D, is a separate

Digitized by Google

piece, strongly bolted fast and arranged so as to grip the piston-rod. The wedge-adjustment for the bearings is intended to accommodate itself to equality of pressure on the two ends of the pin. This very interesting design is rather at a disadvantage, however, when it comes into commercial competition with less expensive arrangements.

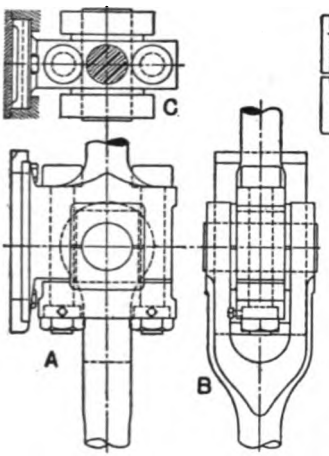

FIG. 296.—Wrist-pin Fast in Forked End of the Connecting-rod.

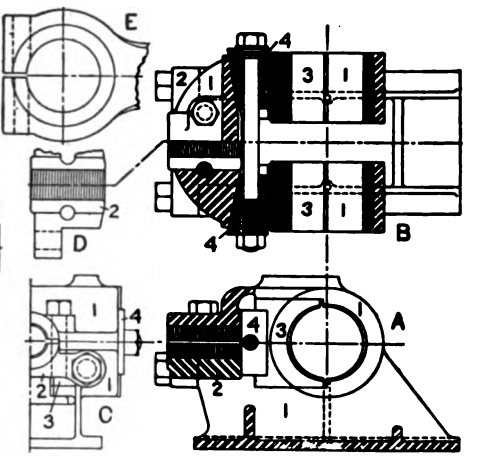

FIG. 297.—Cross-head of the "Straight Line" Engine.

(n) THE WRIST-PIN may be considered with regard to the shape and dimensions of its journal-surface, and to the manner in which it is held in the cross-head. In Figs. 282 and 283 we see pins on which the length of the bearing-surface is about one and one-half times the diameter; but in most cases these dimensions are nearly equal, or the journal is nearly "square." Sometimes the practically useless side surface of the pin (on top and bottom in a horizontal engine) is cut away, as in Figs. 289 and 295. The movement of the rubbing-surfaces in this joint is comparatively small, so that the specific pressure may be very high: it varies throughout the stroke, but its prevailing maximum value will be around 1000 lbs. per sq. in. in stationary engines, and will rise to 4000 lbs. per sq. in. in heavy-pulling locomotives, where 6000 is often reached

Digitized by Google

when the heaviest traction is being exerted, at low speed marine engine, with two wrist-pin journals, need not have more intense pressures than are usual in stationary practi

Holding the Pin.—Two examples of cylindrical pin-fit already been noted, in Figs. 282 and 284. Fig. 290 shows a with a very neat and simple arrangement for clamping it; h pin must be made an easy driving fit, so that screwing up the ing bolts will not sensibly distort the cross-head. With t fixed in a forked rod, as in Fig. 296, a cylindrical shrin

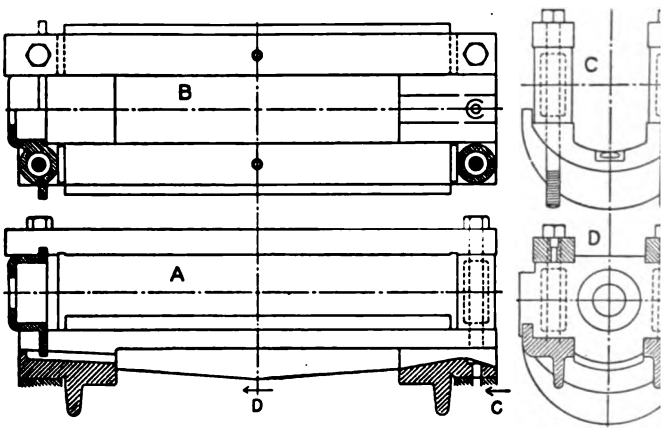

FIG. 298.—Guide-bars to fit Figs. 237 and 282. Scale 1 to 14.

generally made; although when this form of rod is used in st ary engines (in English practice), the pin has sometimes a joint and a retaining nut.

Our examples convey the correct impression that thi method is the one most used for holding the pin in the cross- We distinguish two cases: most usually the two taper-fits are of one cone, so that the holes can be reamed with a plain t reamer; the only example of the other case is seen in Fig This last shows also a way of holding the pin in place that i ferent from the usual nut on the end of the pin; and a sr variation from the latter method is seen in Fig. 285. Somet though by no means always, a shoulder on the pin limits its w

Digitized by Google

action; but there is far less reason for it here than in a piston-rod joint, where the major force-action is along the axis of the cone. Very often there is a little key on one side of the head, to keep the pin from turning.

(*o*) GUIDE-BARS.—In the great majority of stationary engines, the guides are wholly or in great part formed right upon the frame-casting. On locomotives the bars are usually of forged steel, supported as shown in Figs. 231 and 246. Several examples of

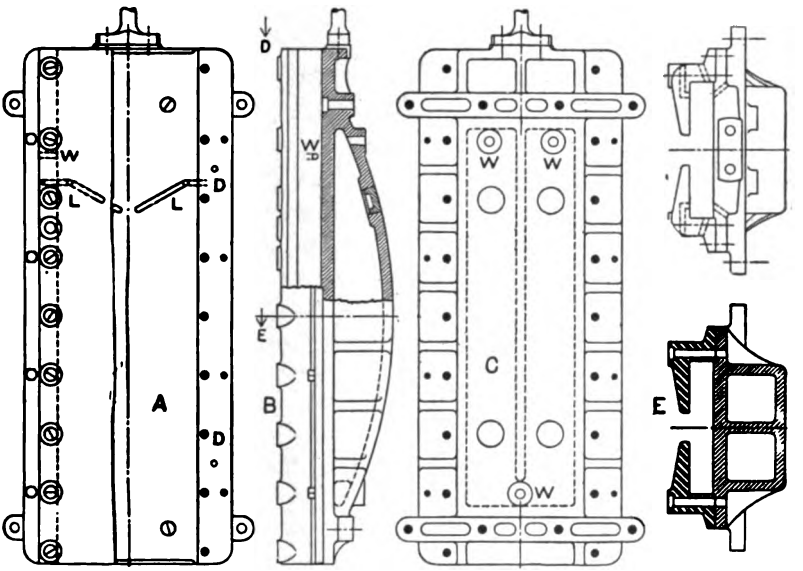

FIG. 299.—Guide for Warship Engine, with frame of steel columns; cross-head in Fig. 295. Scale 1 to 24.

separate guides of cast metal, and hence of more complicated form, will now be illustrated. The first, in Fig. 298, is an enlarged detail from Fig. 237, for the cross-head in Fig. 282. The bottom bars are joined by cross-pieces at the ends, so as to form a single casting, which rests on bored seatings in the bed. Columns or space-blocks support the top bars (likewise of cast iron), those nearer the cylinder being joined by a light cross-web which serves as an oil-guard.

Digitized by Google

Guides for marine engines with slipper cross-heads are shown Figs. 299 and 300. The first is very much like those on the engi in Fig. 235, except that in this both ends are supported by cro bars bolted to the columns, instead of the top end being fasten to a bracket formed upon the cylinder-head; a short strut at t top helps to resist any tendency to vertical movement, which mig be induced by the frictional drag of the cross-head. The ma guide, piece 1, is of cast iron; this metal gives a rather bett wearing-surface than would steel, and it is far easier to make a go hollow casting with iron: but the front or backward-runni guides are of steel for greater strength. When lifted into pla these bars are at first secured by the light tap-bolts near the out edge, then strongly fastened with t heavier through-bolts. Under the ba are several liners of sheet-metal, locat by the dowel-pins at D, D. The wat system is clear, with the connectio marked W in view C: besides the circ lation in the water-back, a direct spr can be thrown upon the rubbing-surfac through the holes in the side-bars, at W in view A. In this view the o holes and grooves are shown at L.

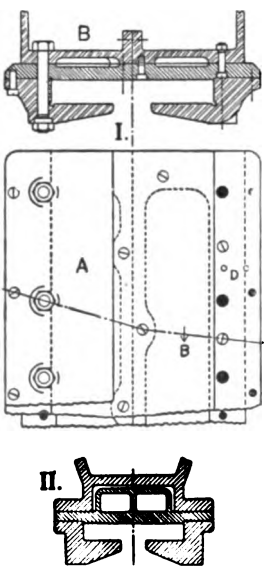

FIG. 300. — Marine Guides for Cast Columns: I. From Fig. 232; II From Fig. 245. Scale of both, 1 to 30.

In Fig. 300 the main Y-frame is cast steel, made in two parts with bolt flanges. The guide-plate of cast iron fastened in place with a number of sun head bolts: and after the cast-steel fro guides have been screwed fast, hea through-bolts are inserted to hold t whole structure rigidly together. Wate spaces are formed between guide-pla and frame, with due provision for supp and circulation; and the sketch at II. given as illustrating another way of forming this water-back.

In Fig. 293, view C, is shown a section of the separate guide-b which is bolted to each of the four cast columns that make up t

Digitized by Google

frame under one cylinder: and this principle, of forming the guide surface upon a light separate piece, is applied almost without exception in marine practice.

Compare with these marine arrangements the device used in Fig. 289, where the guide, relatively very heavy, is divided in the plane of the engine-mechanism, and the halves are strongly bolted together; of course the supports, at the cylinder-head and at the guide-yoke, help to keep these halves rigidly in position, so that their surfaces will form a true plane.

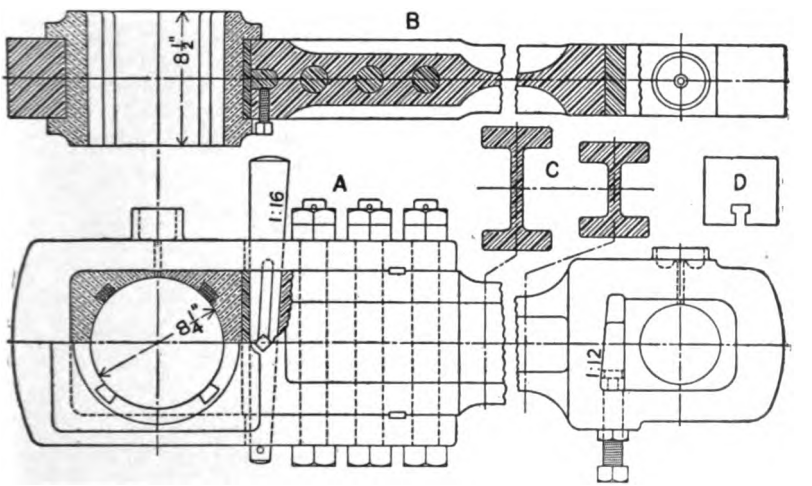

FIG. 301.—Locomotive Connecting-rod, cross-head in Fig. 288. Scale 1 to 12.

(*p*) CONNECTING-RODS.—Without running over Figs. 301 to 311 in sequence and noting individual peculiarities, we will consider the important details collectively, taking up first the shank or body of the rod. This part, besides transmitting along its axis a force alternately tensile and compressive, must also resist sidewise forces due to gravity and inertia. For slow-running engines of the Corliss type, the shank is round, usually largest near the middle and tapering slightly toward the heads, as in Figs. 304, 209, and 213. With higher speeds, the rod-body is often a long cone, tapering toward the crank-end, and flatted on the sides so as to approach a

Digitized by Google

rectangular cross-section as the diameter increases—see Figs. 219, 220, 221, and 229. Stationary high-speed engines, an great many locomotives, have the rectangular section, increa in depth toward the crank-end, as seen in Figs. 303, 305, 203, 223. For high-speed locomotives the sides of this rectangular are milled out, making the I-beam cross-section shown in 1 301, 302, 306 I., and 231. The marine engine runs at a l rotative speed; but the rods are relatively short, the ben action is less severe, and the body is made round, with a sir taper.

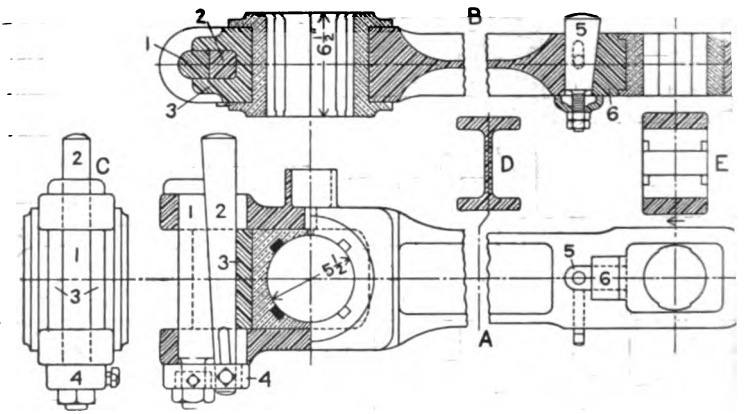

FIG. 302.—Rod for Express Locomotive, cross-head in Fig. 289. Scale 1 to 12.

In stationary engines the ratio of rod-length to crank-radiu usually 6 to 1 or somewhere near that value; in locomotives wh the front driving-axle is not the main axle (as in Fig. 231), t ratio ranges from 7 to 10; in marine engines it is usually about 3 to 1 has been used in extreme cases, but this greatly distorts motion of the piston from symmetrical harmonic motion.

(*q*) CONNECTING-ROD ENDS.—At each end of the rod th is an adjustable bearing for one of the pins. The "boxes" "brasses" which form the bearing proper must be enclosed ir frame or casing of suitable form and strength, and provision m be made for setting them to a proper fit upon the pin and for taki

Digitized by Google

up wear. In the construction of the rod-end which encloses the bearing, four types may be differentiated among the examples given. The *solid* end is seen at the wrist-pin in Figs. 301, 302, and

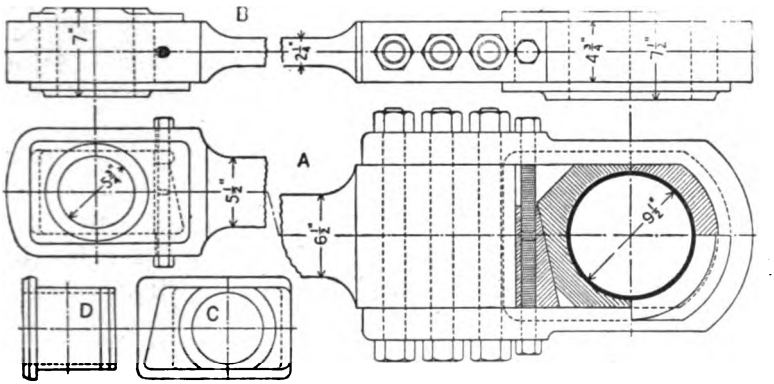

FIG. 303.—Rod for 22″ and 42″ by 27″ Engine, 175 R. P. M., pistons in Fig. 279 I. Scale 1 to 15.

303, and at both ends in Fig. 304. An example of the *jaw* end is given in Fig. 302, and slightly different arrangements are outlined in Figs. 263, 391, and 394; it is especially a German type. The very common *strap* end is illustrated in Figs. 301 and 303, with

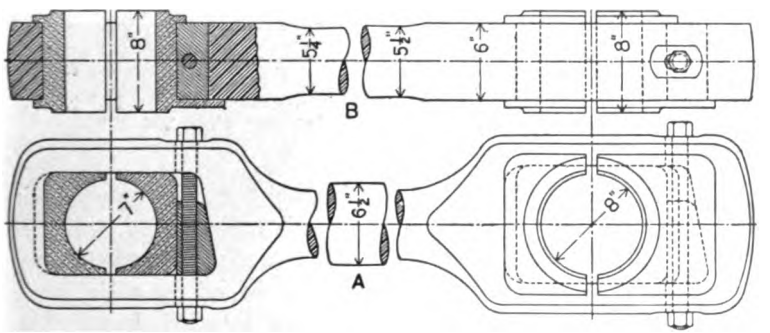

FIG. 304.—Rod for 26″ by 48″ Corliss Engine, Figs. 213, 241, 277. Scale 1 to 15.

modified forms in Fig. 306. The *marine* type, Figs. 305, 308, etc., is used practically without exception on marine engines and very largely in stationary practice.

Digitized by Google

In the old-fashioned key-and-gib strap-end (see Fig. 451 I.), the two functions of holding and adjusting the bearing were combined in one arrangement; but in most modern designs there is a strong, rigid enclosure, within which the adjustment is made. An exception to this statement appears, at first sight, in Fig. 302, but vanishes when we note that the gib-bolt 1 does not move, and that the key 2 and the face-block 3 together form the adjusting device. A real exception is furnished by the marine end; but there the conditions are different, in that the take-up is along the axis of the main holding-bolts; and further, since the boxes are usually separated by liners or shims, and the whole bearing then bolted hard together, the adjustment that can be made by changing the liners is very different from that made by a key or wedge.

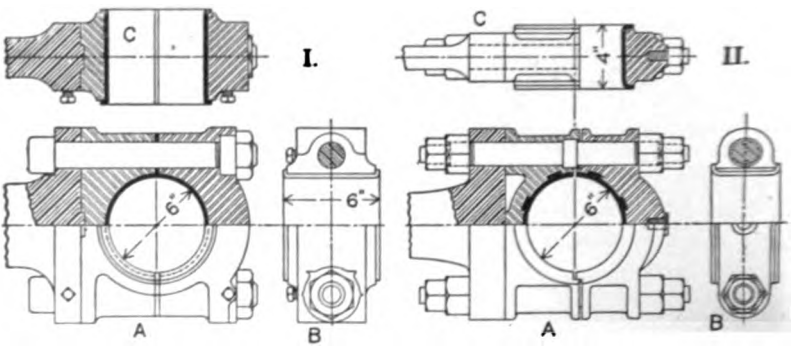

FIG. 305.—Marine Rod ends for Stationary Engines: I. For 15" by 14" engine, Figs. 201, 251; II. For 16" by 16" engine, Figs. 206, 238. Scale 1 to 12

Types of Construction.—Looking at the enclosed ends a little more in detail, we see in Fig. 303 a simple bolted strap, which is held against tension along the rod wholly by the shearing strength of the bolts (plus whatever friction is developed by their grip). In Figs. 301 and 306 II. this shear is largely taken by keys. The strap, besides resisting direct tension along the rod, must also have a very considerable amount of strength and stiffness against transverse forces, central at the crank-pin; which explains why it is made so much heavier than simple tension would seem to require. In this respect the jaw arrangement of Fig. 302 is at a

Digitized by Google

decided advantage, because the sides of the enclosure are held together clear up to the box. In Fig. 306 II. the bolts are supplemented, as to this duty of holding the strap together, by the dovetailed keys and by the light binding strap; and then the

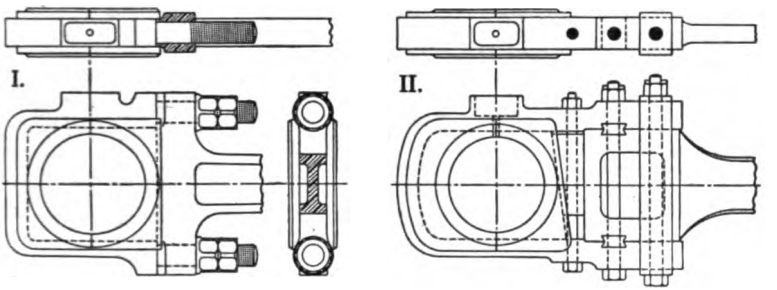

FIG. 306.—Special Rod-ends, French locomotives with inside cylinders. Scale 1 to 16.

comparatively small bolt-holes do not remove too large a fraction of the metal in a cross-section of the rod and strap. The arrangement in Fig. 306 I. is really a combination of the fundamental ideas of the marine and of the strap end. In these last two designs the bearing is so short, relative to its diameter, because the pins of these inside cranks must be kept at the full diameter of the axle;

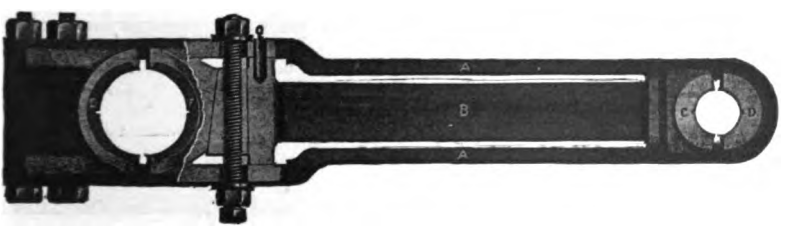

FIG. 307.—Connecting-rod of Westinghouse Single-acting Engine, Figs. 207, 208.

then sufficient bearing-surface can be got with a short pin, and besides there is not room for a long one within the limits of the locomotive.

On the coupling-rods of a locomotive, solid, non-adjustable bearings are used; but always the connecting-rod of any engine is provided with means for taking up wear.

Digitized by Google

(*r*) A SPECIAL DESIGN, for a single-acting engine, is shown in Fig. 307; it is peculiar in that one long strap goes around the whole rod, binding the parts together. All the heavy force transmitted by the rod is compressive, so that the strap is never subjected to a tensile stress of any magnitude. It is strongly bolted to the

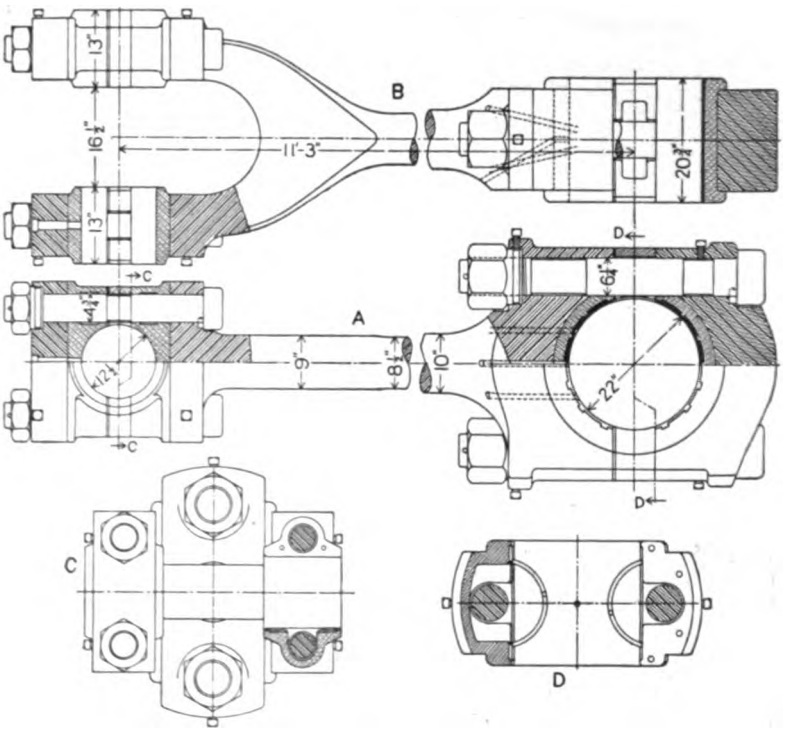

FIG. 308.—Rod from Fig. 232. Scale 1 to 32.

outer box at the crank-end, and all the adjustment is made by one wedge; and this wedge has flanges which keep the rod-body from getting out of place sidewise. The hole marked C is used only when the rod is being put together and handled; a pin stuck in here holds together all the parts above (to the right of) this point. In this rod, as in Fig. 304, the adjustment of the bearings is made entirely by "feel," as there is no clamping of the boxes edge against edge.

Digitized by Google

(s) MARINE CONNECTING-RODS.—Various forms of the marine end are shown by Figs. 308 to 311, one typical arrangement at the crank end in 308 and at 310, the other at the cross-head end of 308 and at 309. In the first, the rod-end and cap form a circular eye or enclosure, within which is held the light cylindrical shell that makes the bearing: this type of end is usually forged as a solid head, the opening for the bearing is made by drilling holes in a circle so as to set free a central core, and finally the cap-piece is cut off, in which operation enough metal is removed to make room for the distance-piece. As to the profile of a lengthwise section of the bearing, the two examples given show quite different shapes. These rods, when for high-speed engines, are always very closely designed for strength, so as to minimize their weight; and Fig. 310 shows especially close trimming.

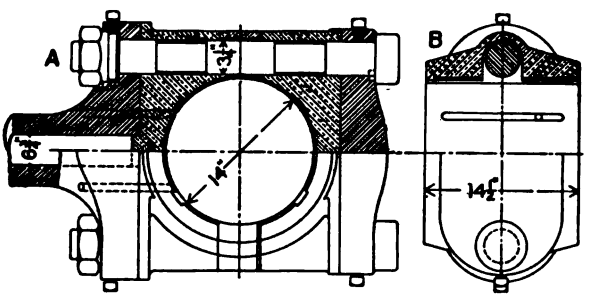

FIG. 309.—Rod with T-end and Square Boxes, cross-head in Fig. 295. Scale 1 to 18.

The second type of head has separate rectangular boxes, held between a T-end forged upon the rod and a flat cap also of forged steel. These boxes are of brass or bronze, lined with white metal at the crank-pin, but with the harder surface of the copper-alloy at the wrist-pin, where the specific pressure is so much higher. Most of the adaptations of this rod-end to stationary engines are like Fig. 305 I.; 305 II. is peculiar in the general form of its bolts and in the detail of the lock-nut arrangement. The boxes are here of cast steel in both designs, although cast iron is often used; and the outer box is made strong enough to serve as cap also.

In Figs. 308 to 311, note how the bolts are kept at the full

Digitized by Google

diameter, over the screw-threads, wherever they act as pins to keep the parts in alignment; but are elsewhere down to the effective diameter inside the screw. In F and 309 the bolt is kept from turning by a key-pin under t and is held in the cap by a set-screw; and the same nut device is used in all these designs. The distance-pieces 308 are of cast iron; one is shown in section at D, held in by four dowels. That in Fig. 310 is a light brass cast

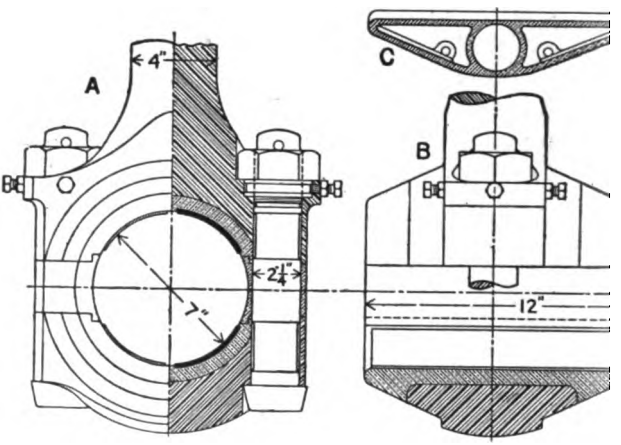

FIG. 310.—Rod with Round Eye, British torpedo-boat destroyer, (19½", 30", 34"–34" by 18". Scale 1 to 9.

nearly every case, thin liners are used for adjustment; t these it would be necessary to file or plane down the di block as the bearing wore loose.

Fig. 311 shows an adaptation of the idea of Fig. 306 large marine engine. By the combination of the cap wi bolts into one piece, the minimum of weight seems to be s but this semicircular strap is a rather awkward piece to ma

(*t*) ROD-BEARINGS AND THEIR ADJUSTMENT.—For sta engines, the crank-pin boxes are usually of cast iron or cas with babbitt lining. Only in the locomotive are they re made of brass or bronze, which bears directly upon the pin the wrist-pin, brass bearings are generally used. Brass box babbitt belong especially to marine practice, as already rem

Digitized by Google

The lining of white metal is almost always cast in place, and held by dovetail grooves. An exception is seen in Fig. 305 I., where there is a loose thin shell of babbitt, set into the boxes and kept from turning only by the liners at the joints, which project inward. The best white metal is composed mostly of tin, with some copper and antimony: in cheaper grades, more or less lead is used. In large bearings the lining is well hammered after

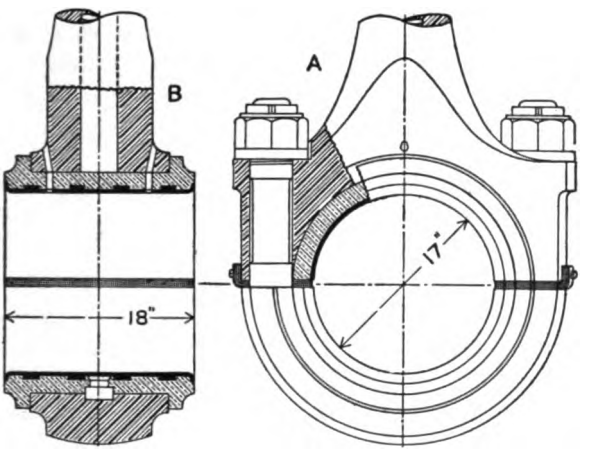

FIG. 311.—Marine Rod with Semicircular Strap, Schneider & Co., France. Scale 1 to 18.

casting, to harden it and force it closely into the grooves, and is then bored out to the exact diameter for the journal. This statement applies to new work; a repair job means usually simply casting the lining around the journal, without any other finish.

The boxes are held against sidewise displacement by flanges, which extend all around the enclosure when the latter can be opened to insert the boxes, as at the crank end in Figs. 301, 302, and 303. With a solid end, the flanges on one side cannot be complete, but must be made as shown at C and D in Fig. 303, where the inner box, with the wedge, is slipped into place last and then held by the wedge-bolts. In Fig. 301 the wrist-pin boxes are held in simply by the cross-head; in Fig. 302 the block 6 is first put in, then the box next to it, lastly the outer box.

Digitized by Google

Adjustment-devices.—The use of a key to adjust the bearing, in Fig. 301, is quite common on locomotives. It has the d advantage that there is only a comparatively small bearir surface of wedge on box, and the metal is likely to be crushed course of time. In the example shown, this difficulty is overcoi by putting a steel plate between the key and the bronze box; Fig. 302 the key is unusually thick, and bears upon the steel fa block 3. Generally, however, a broader wedge is preferred, as Figs. 303 and 304 especially. Various ways of holding and adju ing the wedge are shown, all of them securing it against motion both directions. Note that in the solid ends the slanting bearir surface is formed upon the rod; while an example of the oppos arrangement is seen at the crank-pin in Fig. 303.

Lubrication.—The provision for lubrication consists of oil-ho and grooves; the former come either from the outside of the be ing or from within the pins; the grooves are cut in the lining the bearing, and are generally short segments of a helix, so as lead the oil over the whole surface. In most of the drawings t lubrication details are omitted, in favor of a clearer view of t details of construction. On marine engines, oil-pipes are fasten along the rod, entering the bearing through a drilled hole: at t top, near the wrist-pin, the pipe carries a small box with a wip which taxes oil from a fixed pipe. A part of this arrangement c be distinguished on Fig. 235.

§ 45. The Rotating Parts of the Engine.

(*a*) SHAFTS WITH OVERHANGING CRANK.—The usual type shaft for stationary side-crank engines is well represented by F 312 I. Shaft and crank-pin are of mild steel, the disk is of ca iron with a fan-shaped counterweight formed upon it. They a put together with either forced or shrunk fits, the holes in t disk being bored about one in one thousand smaller than the piec which are to go into them. The crank-pin is riveted over f greater security, and has a detachable cap, to receive the solid-e connecting-rod shown in Fig. 304. To carry the weight of tl wheel and generator, the shaft is enlarged between the bearing

Digitized by Google

but its diameter can be reduced where it enters the crank-hub without sacrifice of needed strength, although the proportion of reduction is greater in this case than where the conditions of working are more severe.

Fig. 312 II. shows the shaft for a large duplex horizontal-vertical engine. The straight shaft is a hollow forging of high-grade steel, oil-tempered; the disks or webs are massive steel

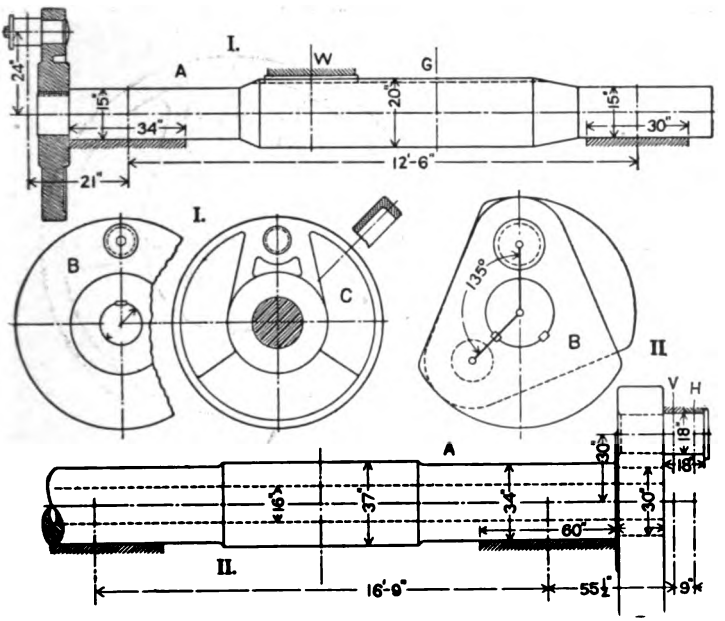

FIG. 312.—Shafts with Built-up End-cranks. I. For 26″ by 48″ Corliss engine, Figs. 213, 241, scale 1 to 48; II. For engine in Fig. 219, scale 1 to 72.

castings. Referring to Fig. 219, we see that the two connecting-rods act upon the one pin as here indicated by the letters H and V.

A rather special example is given in Fig. 313; the crank is made, not of ordinary cast iron, but of a mixture called steeled cast iron or semi-steel—steel being added to the iron in the melting, so as greatly to increase its strength and toughness. The hole in the middle of the pin is cored out chiefly to help in getting a sound casting: when plugged it forms part of the oil-conduit. Note the

Digitized by Google

eccentric groove turned in the outer face of the hub, where will catch oil escaping from the inner end of the main beari centrifugal force will make this oil flow around to the hole wh leads to the crank-pin. This device is seen on Fig. 315 also.

A good example of the main axle of a locomotive, properly crank-shaft of the engine, is illustrated in Fig. 314. The connecti rod takes hold of the outer journal on the crank-pin, while inner journal is for the coupling-rod, which couples in the ot

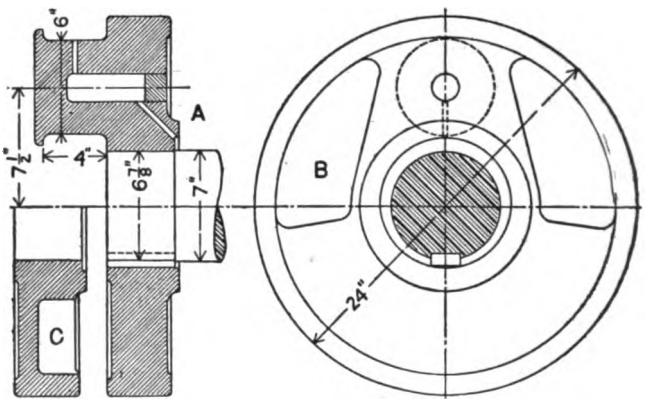

FIG. 313.—Crank-disk with the Pin cast upon it, for 16" by 15" engine as Figs. 206, 215. Scale 1 to 12.

three driving-wheels. Both crank-pin and axle are subjected severe bending actions; and instead of being reduced in the whe fit they are kept at full size, or even increased in diameter. At are given enlarged detail sections of pin and axle, showing tl little collars turned upon them to limit their movement wh being forced into place with the hydraulic wheel-press. The whe is of cast steel, and the hub is faced with a bronze plate, show also at D, where it bears against the axle-box.

(*b*) SHAFTS WITH INSIDE CRANKS.—A typical shaft for a higl speed center-crank engine is shown in Fig. 315. Formerly, almo all designers used a complete cast-iron disk, fitting and fastening upon the web of the solid forged shaft in some such way as is show in Figs. 3 and 5. Thus to fill out the disk at the sides of the cran

Digitized by Google

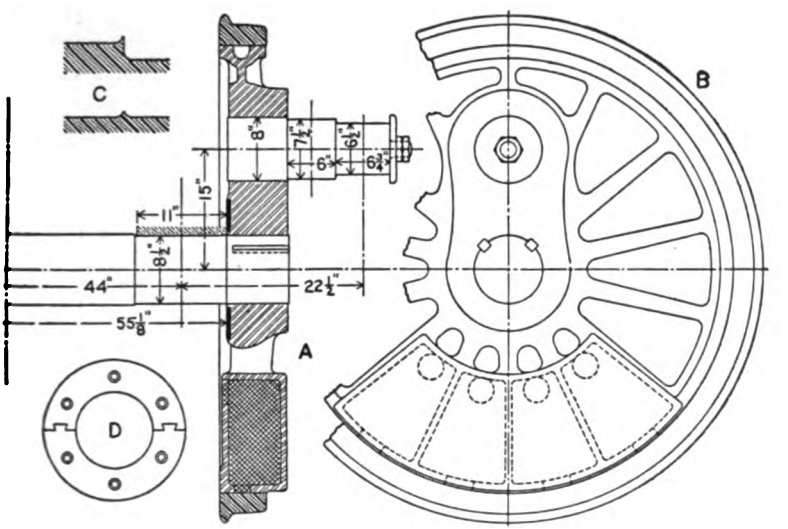

FIG. 314.—Main Axle for a "Consolidation" (Four-coupled) Locomotive, with the cylinders in Fig. 256 and about 40,000 lbs. on each driving-axle. Scale 1 to 24.

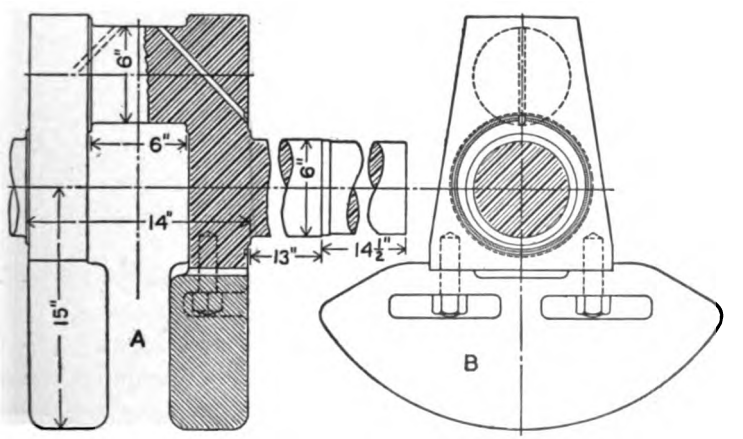

FIG. 315.—Shaft for 15" by 14" High-speed Engine, Figs. 201, 237. Scale 1 to 12.

Digitized by Google

neutralizes an equal amount of metal beyond the shaft; i is therefore easier to get a required amount of counterbalar the construction here given. Another advantage of this ar ment is that the end of the connecting-rod is much more acc than when it is between circular crank-disks. Of course, tl a larger possibility that the weight may get loose, which m guarded against by inspection at not too long intervals. W greater counterforce is needed than can conveniently be pr with iron, the weights are made hollow and filled with lead Fig. 314. Usually, shafts of this type are of steel, the crank forged as a solid block, then cut out in the machine-shop quite frequently steel castings have been used for small shaf the size in Fig. 315 and under, with satisfactory results.

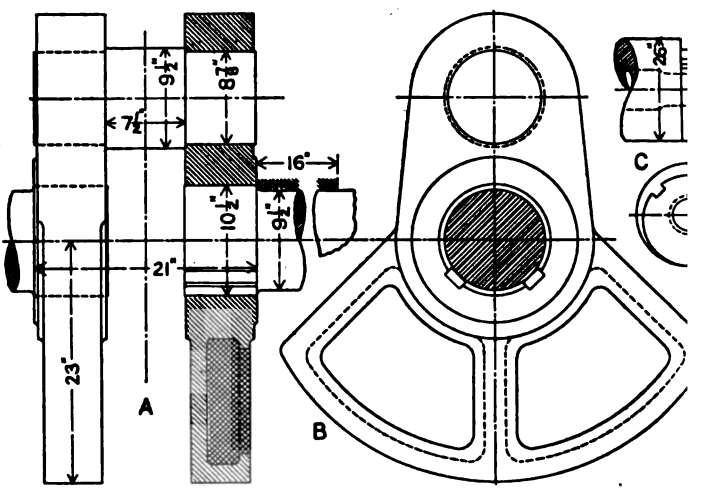

FIG. 316.—One Crank for 22″ and 42″ by 27″ Vertical Engine, Fig 242, 303. Scale 1 to 18.

A part of a shaft for a quarter-crank compound engine is s in Fig. 316. A noticeable feature is the enlargement of the of the shaft-sections where they enter the crank-hubs—this in marked contrast to Fig. 312. For multiple-crank stati engines, this built-up type of construction is far more commor the solid-forged type so usual in marine practice.

Digitized by Google

With a large shaft and crank-pin there is likely to be very little metal left between the holes in the crank-arm. One way of overcoming this difficulty is shown at C in Fig. 316,* where the reduced end is made eccentric to the body of the shaft, being moved away from the pin.

(*c*) SHAFTS FOR MARINE ENGINES.—For very large marine engines, the built-up type of shaft shown in Fig. 317 is generally used. All the parts are of high-grade steel—nickel-steel in this particular case—and they are put together with shrunk fits. Quite often the pins are keyed as well as the shaft-ends, but there

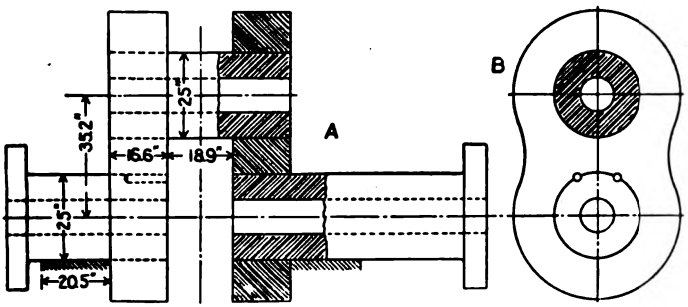

FIG. 317.—Section of Shaft for Large Passenger Steamer, pistons in Fig. 279 II. Scale 1 to 56.

is really no need for this, because the pin has no tendency to turn in its hole unless the bearings fail radically in their duty of properly supporting the shaft. Removing the core saves weight with only a minute decrease from the strength of a solid shaft of the same diameter; when the piece is large enough to be forged hollow, upon a mandrel, it decreases very much the thickness of metal acted upon by the hammer or the forging-press; and it greatly facilitates the heat-treatment of annealing and tempering upon which the quality of this class of forging so largely depends.

In engines of medium size, for war-ships especially, the cranks are solid-forged, and very often there are two in one section, as in Fig. 318 I. An important advantage of the solid crank is its

* Westinghouse Machine Co., see *Power*, May 1902.

Digitized by Google

saving of weight as compared with the built-up type. Wi
now very common grouping of four cylinders in two closely-s
pairs, the two cranks are so near together that a joint cou
possibly be made between them. In any case, the shaft is
in two or more sections, which are joined by flange-cou
These can be seen, partly at least, in Figs. 232 to 235; and
are given at B and C in Fig. 318 I. Sometimes cylindri

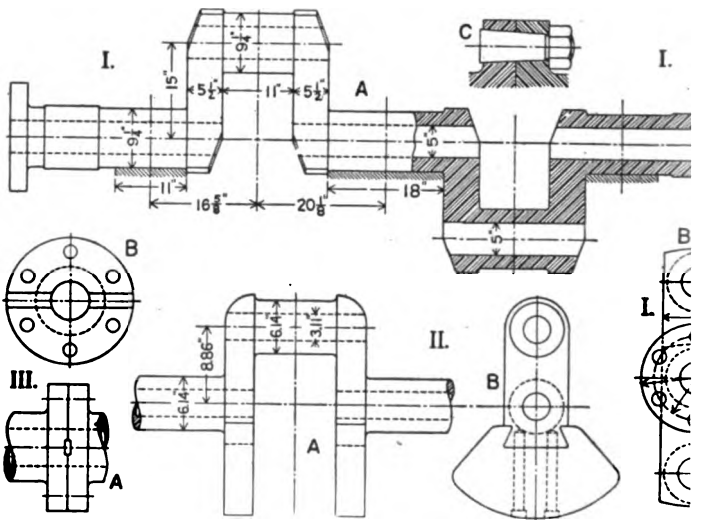

FIG. 318.—Solid-forged Marine Shafts. I. For U. S. Cruiser, "D
class, cylinders 18", 29", 30½"–30½" by 30", scale 1 to 30;
French Torpedo-boat, cylinders 17", 24", 34.2" by 17.7", scale 1 t
III. Flange-coupling with key.

"parallel" bolts are used; but the conical bolt here illustra
easier to fit and to put in, and especially is it easier to take
occasion. The only disadvantage is a tendency to enlarge th
on account of wedge-action; but it is not difficult to provide e
metal in the flanges to give ample strength against this action.

Fig. 318. II. shows part of a torpedo-boat shaft, with co
weights—a rather unusual addition: these weights must b
strongly fastened, because the highest speed of this engine is
twice that of a stationary engine with the same stroke. In
and very light engines for this line of service, the shafts are

Digitized by Google

all in one piece, with three of four cranks, and sometimes even with the eccentrics forged upon them. This is very largely a matter of absolute size and weight, facility in handling, both in the shop and in the ship, having a great influence in determining how much shall be put into the unit.

At III. is sketched a flange-joint with a key, intended to relieve the coupling-bolts of shearing stress. As these bolts can easily be given ample strength, there is little need for this extra piece, and it is seldom used.

(*d*) Strength of the Shaft.—With the engine-forces known, it is possible to determine quite closely the stresses developed in the shaft, graphical methods being particularly advantageous. Always there is a combination of bending and torsion, so that the problem, though capable of rational solution, is likely to be very complex: especially is this true of a shaft with a number of cranks. An extreme case is the engine to which Fig. 317 belongs. In this ship there are two three-crank engines coupled fore and aft and driving one propeller, or six cranks in all: close analysis would give increasing diameters for shaft and crank-pins, going aft. Actually, the forward engine has a shaft diameter of 21 ins. against 25 ins. in the after engine. All the crank-pins are of the same size, for the sake of having the connecting-rods alike; but the axial hole is larger in those which have the smaller force to transmit.

We shall not take up the problem of shaft design at this point, any more than the other matters of design for strength. But as an instance of the importance of being able to solve problems relating to the strength and stiffness of the shaft, may be mentioned the fact that it is sometimes necessary to give the stroke-lines of the two units of a large vertical engine a slight inclination toward each other, in order to make the connecting-rods bear squarely upon the crank-pins—this applying to an engine like Fig. 218 or 219, with a heavy rotor between rather widely-spaced bearings.

(*e*) Bearings for Stationary Engines.—In connection with the shaft we shall consider now the detail of the part of the frame-work upon which it rests. Fig. 319 shows typical examples of bearings from small high-speed engines. In I. there is a one-piece bushing of cast iron, lined with babbitt (detail of lining not shown);

Digitized by Google

adjustment is made by springing the bushing together w
own clamping-bolts, then screwing the cap down upon it.
the very narrow bearing-surface between frame and bushi
latter has a little of the freedom that would be given by
and-socket support. With plentiful lubrication, a bear
this sort will wear very slowly: but should anything hap
spoil it, the removal of the bushing involves taking off the w

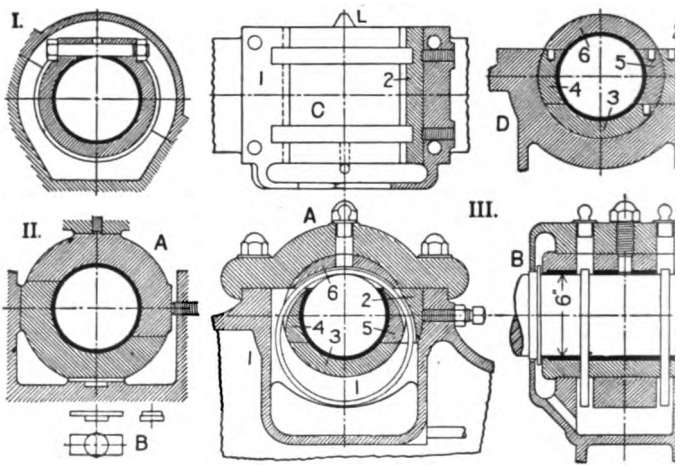

FIG. 319.—Bearings for High-speed Stationary Engines. I. Detai
Fig. 5; II. Simple bearing in two parts; III. Ring-oiling bea
four parts.

A very simple two-piece bearing is shown at II. The
set-screw adjustment is at the right, while that on top ob
the need of close fitting of the cap on the bearing-boxes.
only a slight sidewise displacement of the shaft, the lower b
be easily taken out for examination or repair. Beneath the
view is a detail of the universal key which fits into a roun
in the bed and a cross-slot in the bottom box, so as to hol
latter against endwise movement.

At III. in Fig. 319 a four-part bearing with oiling-rings is
more in detail. The adjustable quarter-box 5 is backed by a
block 2, of which the outer surface is cylindrical below the
of the shaft-axis, so that it can be easily taken out. In view

Digitized by Google

shown the holes for lifting screws which are tapped in the several parts of the bearings. In the middle of the bearing, at the top, is a screw-pin which serves as a dowel, to keep the boxes from ever turning with the shaft. View C is a plan of the casing, with the boxes removed. The lubrication arrangements, besides the oil-well and the rings with peep-holes above them, include a light collar fastened upon the shaft at the outer end of the bearing, to catch all oil that escapes and return it to the well. At the inner end the oil drips upon the projection L, from which it is scraped by a little catcher on the crank-disk, and carried to the crank-pin.

The engine-frames in Figs. 237 and 238 have even simpler arrangements than those just shown. In Fig. 238 the babbitt-metal lining is cast right in the frame and the main cap. Fig. 237 has thin loose shells of babbitt, held just as in the connecting-rod, Fig. 305 I.

Corliss-engine Bearings.—In horizontal engines of the Corliss type, the bearings are usually made in four parts, with side-adjustment either by set-screws or by wedges. Fig. 320 I. shows vertical adjustment also, by means of the wedge drawn in detail at C. It is hardly possible that a lifting force greater than the weight of the shaft and wheel will ever be developed in an engine of this class; consequently, the top box is made light, and is held down simply by contact with the cap at the ends. The big hollow cap is characteristic. In view B, the upper half is a plan of the bearing-cap, and the lower half is partly a top view of the base, partly a section by a plane through the shaft-axis.

Fig. 320 II. shows a double wedge-adjustment, the wedges being drawn up by long studs, with nuts on top of the cap. With this arrangement in only one of the two bearings, it is possible always to square the shaft with the stroke-line, besides taking up wear—provided the bottom box can move, as in this case. Where the lower part of the bearing is solid with the frame, as at III., the wedges can be used only to adjust the side boxes to a proper fit. These wedges are raised by set-screws, which go through them and rest upon the seatings beneath them, so that the cap can be taken off without affecting the adjustment.

The bearing for a very large engine is given in Fig. 321. We

Digitized by Google

note first the ball-and-socket support, which insures a unifc distribution of pressure between journal and bearing. The m box 1 is cored out, in the manner best shown by the develo cylindrical section at D, in order to permit the circulation of c ing-water, which enters by a pipe following the path from P.

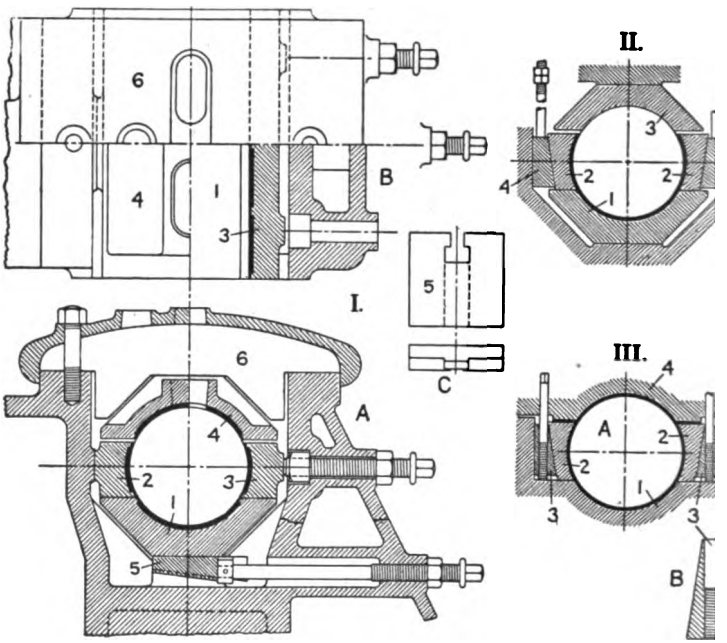

Fig. 320.—Bearings for Engines of the Corliss Type. I. For frame in 241, shaft in Fig. 312 I., scale 1 to 24; II., III. Different arrangem of the wedges.

making the space-block 5 a separate piece, the box 1 is given s a form that it can be turned freely on the shaft when the latt jacked up only enough to take its weight off the box—suit holes for screw-handles being provided. In spite of the fact t the high-pressure element of the engine is vertical, the free lif force during the up-stroke, over and above the weight of the sl and its load, is comparatively small: so that the top box narrow and light, and is held down only by three long set-scr besides being suspended by a couple of lighter tap-bolts.

Digitized by Google

drawing shows the form of the frame-casting around the bearing, and also illustrates a detail of practice which is frequently followed in large engines, in that the bolts for the bearing caps come clear

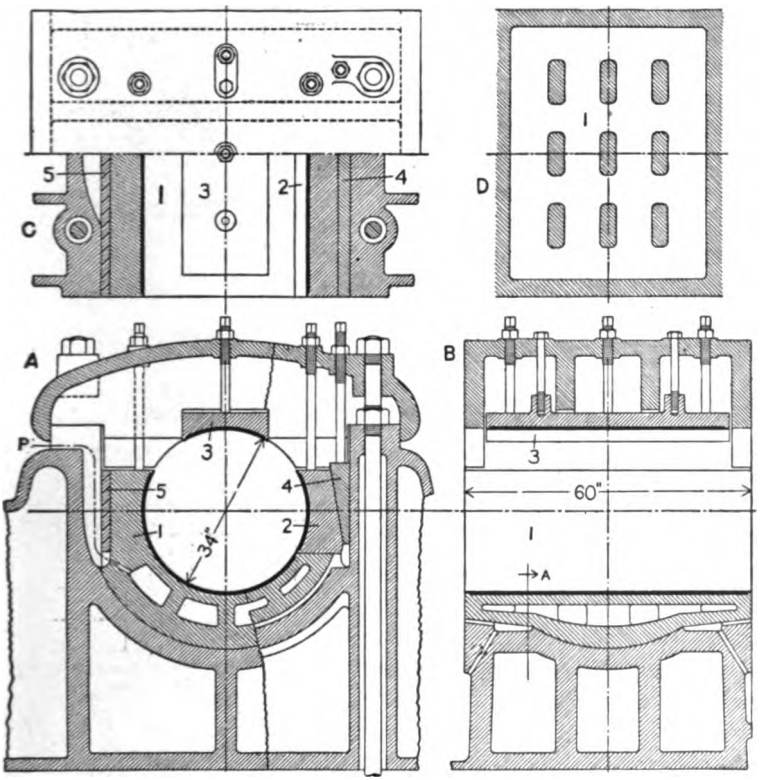

FIG. 321.—Bearing for Engine in Fig. 219 and Shaft in Fig. 312 II. Scale 1 to 40.

through from the foundation, taking their share in the duty of holding the whole engine in place. At the left of view B is seen the beginning of the light floor, a part of the main casting, which runs under the crank-pit to keep oil and water off the foundation.

(*f*) BEARINGS FOR MARINE ENGINES.—A fair idea of the form of these bearings can be got from the general views, Figs. 232 to 235, and from the frame drawings, Figs. 243 to 245. Two examples are given in detail by Figs. 322 and 323. The first has a square

Digitized by Google

bottom box of cast iron and a hollow cast-steel cap, both
for the circulation of water. The bolts are long studs, wit

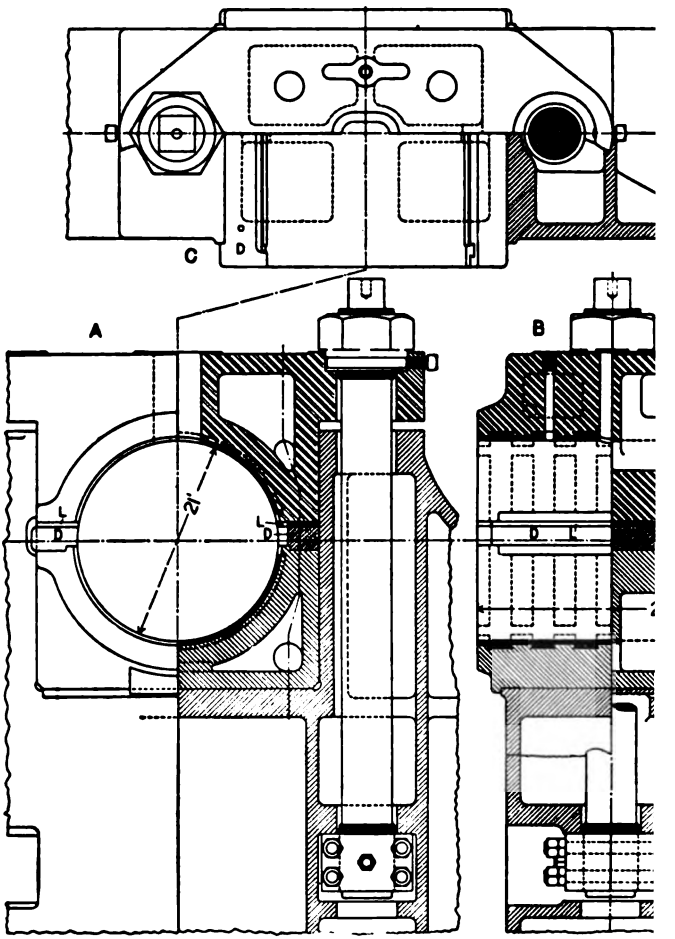

FIG. 322.—Bearing from Fig. 232, 21″ shaft. Scale 1 to 2

split nuts at the bottom: only occasionally are ordinar
screwed into the frame, used for holding down the ca
halves of the bearing are separated by a distance-piec
group of liners. The latter, with a total thickness of ½ in.,

Digitized by Google

up of a graded series as follows: one each of $\frac{1}{4}$, $\frac{1}{8}$, $\frac{1}{16}$, $\frac{1}{32}$, and two of $\frac{1}{64}$ in.: so that it can be adjusted by 64ths to any thickness desired. These liners are held in position by dowel-pins, in the usual manner. In view C, the distance-block is in place at the left, but at the right it is removed. In B the upper edges of the dovetail ridges which hold the white-metal are dotted in outline.

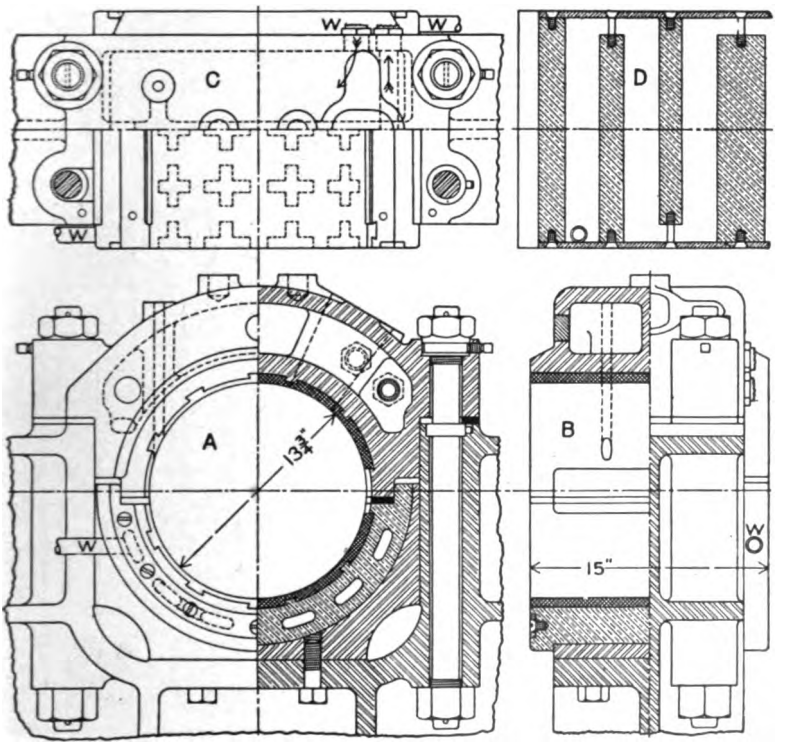

FIG. 323.—Bearing for U. S. Battleship "Mississippi"; compare Figs. 235, 295, 299, 309. Scale 1 to 12.

Fig. 323 shows a bearing in which the lower box is cylindrical, as in Fig. 244 also: but here this box rests in a "false" seating set into a square recess in the frame, instead of having a cylindrical seating formed right in the frame. The only apparent advantage is that the bearings can be adjusted vertically by putting liners

Digitized by Google

under this separate seat—although it does perhaps simplify t
main casting just a little, in the matter of keeping the thickn
uniform, to have a rectangular jaw when it comes to providi
place for the bolts. In the thin bottom-box water-passages
cored, closed at the ends by strips of plate, as best shown in t
developed section at D: with this serpentine course, the circulat

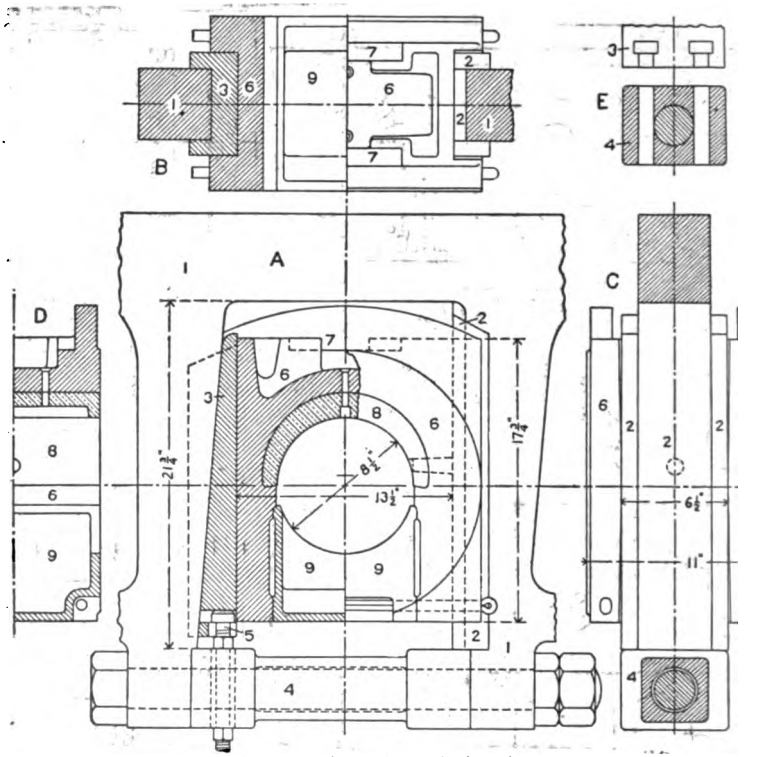

FIG. 324.—Locomotive Axle-box, for axle in Fig. 314. Scale 1 to 12.

of the water is very complete. Besides the two small oil-h
through the cap, there is one large hole for grease or water, wh
also serves as a peep-hole. The water connections for this cap
shown at C, consisting of a direct inlet into one half and a pipe
jecting through the middle partition into the other half, to se
as outlet.

Digitized by Google

(*g*) LOCOMOTIVE BEARINGS.—A typical locomotive axle-box is given in Fig. 324. Inside the frame-jaw 1 there are two shoes, of which 3 is in the form of a wedge, to adjust the space for the axle-box 6. The enclosure is completed by the pedestal-brace 4, with a heavy through-bolt. The box 6 is here of cast iron, but is now much oftener made of cast steel. Into it is forced the bronze bearing 8, only a top bearing being needed in this case. The circle is completed by the light cast-iron "cellar-box," which is filled with wool-waste soaked with oil. Special details, belonging to the carrying function of the axle rather than to its service as the engine-shaft, are, the pocket 7 in the top of 6, wherein rests the support for the spring-rigging; and the manner in which the flanges on 6 are opened out toward the ends in view C, so that one end of the axle can move up and down in the frame independently of the other.

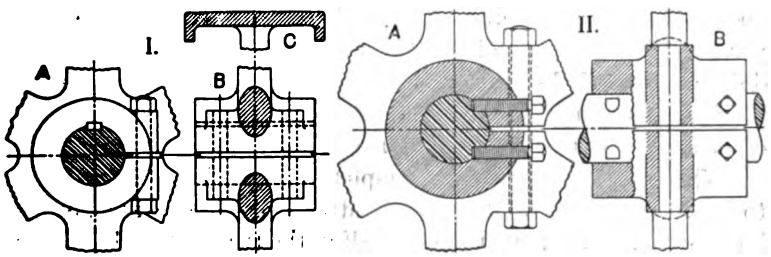

FIG. 325.—Fly-wheel Hubs for Small Engines. I. Standard design; II. For 15″ by 14″ engine, Figs. 237, 315, scale 1 to 16.

(*h*) SMALL FLY-WHEELS.—The general form of the wheel is very well shown by the illustrations in the first part of the chapter. Stationary engines for general service have wheels of the belt-pulley type; and this generally holds true, for the smaller sizes, even when the engines are direct-connected to generators, as in Figs. 202, 203, 206. For larger engines, direct-connected or directly loaded, the balance-wheel type with rectangular cross-section of the rim is usual, as in Figs. 209, 214, 216, 223, etc.

Small belt-pulley wheels are made with inside flanges on the rim, as shown at C in Fig. 325 I. In diameters less than 9 ft. they are usually cast in one piece; but very generally the hubs are split, on one side or all the way through, so that they can be clamped upon the shaft. Fig. 325 I. is a typical arrangement, with two

Digitized by Google

bolts at one side of the hub, and a common rectangular key. Fig. 325 II. shows a single bolt in the plane of the arms, and has set-screws fitting into pockets milled in the shaft.

(*i*) WHEELS IN HALVES.—Wheels up to 16 ft. in diameter are commonly made in halves—the size of the largest piece that can be shipped on an ordinary railroad-car having a good deal of influence in this matter. One example of the balance-wheel type is detailed in Fig. 326 I. The hub is strongly clamped upon the shaft by the four heavy bolts; the strongest part of the rim-joint consists of the two I-shaped shrink-bolts or links. These are machined exactly to length between the heads, and the seatings in the wheel-rim are similarly finished. The link is made shorter than the space it is to occupy by from one in one thousand to one in eight hundred. With a coefficient of elasticity of 30,000,000 lbs. per sq. in., a deformation of 1 in 1000 will produce, or be produced by, a stress of 30,000 lbs. per sq. in.: in this case the deformation will be mostly concentrated in the link, which is so much smaller in cross-section than the body of cast iron which it clamps together that nearly the full stress will be developed.

Wheels of this size will be completely finished in the shop; and to insure a neat fit at the joints, little screw-dowels are put into holes drilled and tapped half and half in the two parts. In erecting the engine, these will be put in first, along with the bolts through the lugs inside the rim, and the shrink-links are put in last of all.

Another form of connecting-link is shown in Fig. 326 II., the name "link" being here closely descriptive. At III. is a special joint, belonging to the engine in Fig. 217. The same U-shaped tie, without the I links, is used in Fig. 203, two at each joint. These can be put in hot, so that they will have a good grip when cold: the temperature required for a shrink-fit of the degree above described is not very high, but is well below the beginning of "red heat."

The tie-bar with keys, Fig. 326 IV., is sometimes used, Fig. 223 being an instance. This is not a shrunk joint, but is tightened by making the keys with a slight taper and driving them in hard.

Large wheels of the belt-pulley type are joined by bolted flanges, after the manner of the sketch at V. In very large diameters these

Digitized by Google

wheels will be made in a number of segments, each with one or two arms, and with an arrangement at the hub similar to that in Fig. 327. Wheels have been built with the arms separate from

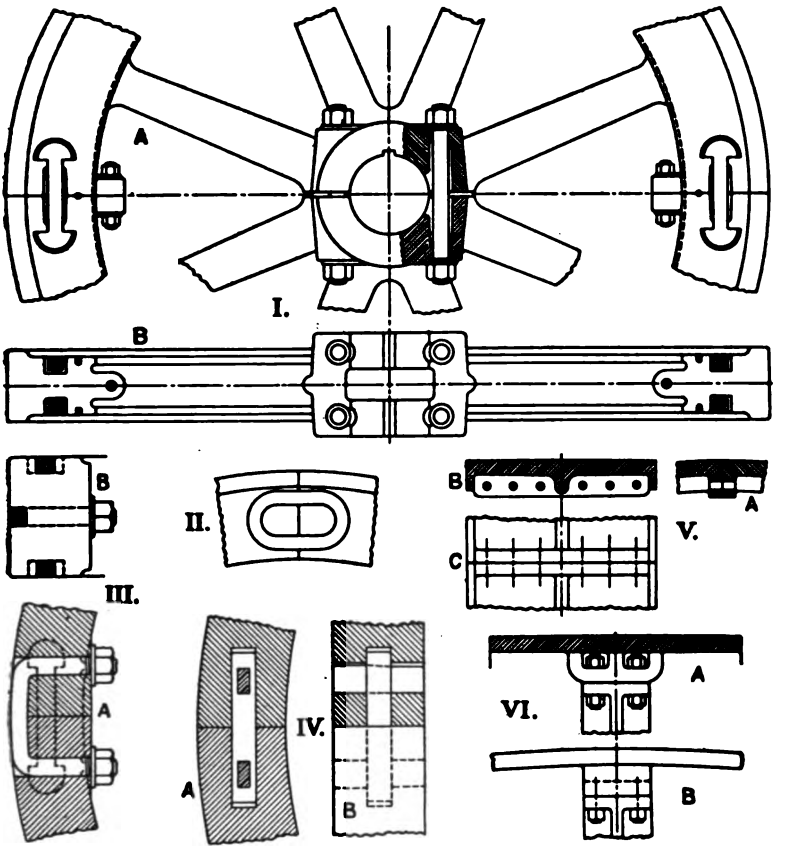

FIG. 326.—Balance-wheels of Medium Size. I. 16-ft. wheel for 26″ by 48″ Corliss engine, shaft in Fig. 312 I., weight 62,000 lbs., scale 1 to 48; II. to VI. Details of wheel-joints.

the rim-segments and bolted fast as in Fig. 326 VI.—the arms having the cross-shaped section seen in Fig. 210; but it is now standard practice to cast rim and arms together. A belt-pulley wheel in halves is seen in Fig. 211.

Digitized by Google

(*j*) LARGE WHEELS IN SEGMENTS.—Large and heavy balance wheels are usually constructed after the method illustrated i Fig. 327. In this design we note first that the hub is in halve divided by a plane perpendicular to the axis of the shaft. Betwee the flanges on these halves the inner ends of the arms are securel fastened by closely fitted, heavy bolts. The unit division of th body of the wheel is one arm with its segment of the rim, this bein likewise of cast iron. The rim joints are made with heavy I link The rim-center is reinforced by side plates of cast steel: of thes each section covers the angle of two arm-spaces, and they brea joint on the two sides so that there is nowhere more than or

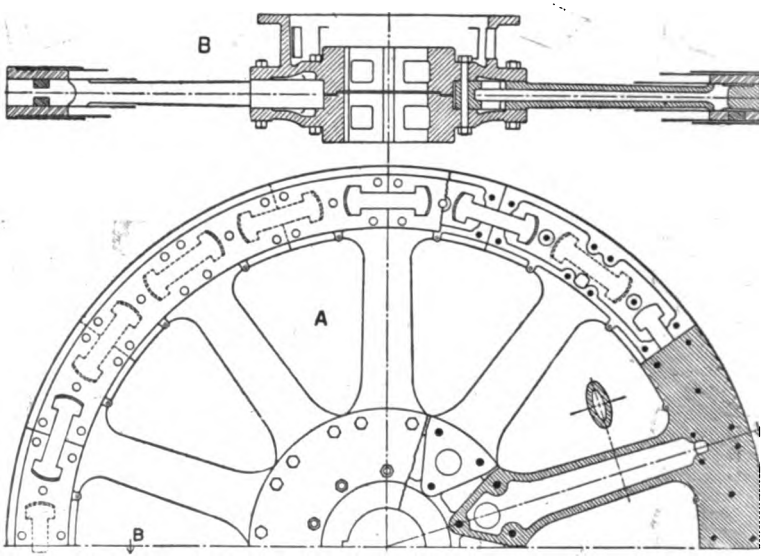

FIG. 327.—Twenty-eight-foot Wheel for vertical Corliss engine, 42″ and 86 by 60″. Scale 1 to 84.

link-joint at any cross-section of the rim. The whole rim is strongl fastened together by stout pins, which are forced into reame holes by hydraulic pressure, then riveted cold.

As regards circumferential strength against centrifugal force each of the three divisions of the rim is a self-supporting ring held together by its own I bolts: but besides this, through th

Digitized by Google

riveting of the sections together, the excess strength of two, between their joints, compensates for the loss of strength of the one which is reduced in section at its joint; so that the structure as a whole has a higher efficiency than any one of its circular elements. Here "efficiency" has the same meaning as in the discussion of riveted joints, being the ratio of the least effective cross-section to the full section of the rim.

Sometimes these large wheels are made with a core or center to the rim, as here, and side rings built up with several layers of rolled plate. The segments of these rings are simply butted together, without tie-links, so that circumferential strength is wholly a matter of shear upon the through-pins. Further, to avoid having several joints in the same cross-section, either the segments must subtend a large angle, or there must be a great many rivets so that the joints can be separated by very small angles. Finally, the rolled plates are likely not to be true enough, in thickness or in flatness, to make a really neat job without being planed. For these reasons, the method in Fig. 327 seems to be generally preferred. Quite often, however, the arms and rim-center are of cast steel, the arms being then cast solid; and the unit is frequently two arms with their share of the rim.

(*k*) STRAINS IN FLY-WHEEL.—In general, there are two major force-actions in fly-wheels, due to centrifugal force and to angular inertia. The resistance of the rim to radial force, considering it as a simple ring, has been discussed in § 36 (*i*); where the fact was brought out that the circumferential stress depends simply and only upon the linear speed of the rim. It is easy to remember that this speed is, in usual practice, somewhere near a mile a minute or 90 ft. per second. In the ordinary wheel, the rim is held in by the arms, as well as by its own tensile strength; to some extent this action is helpful; but it also favors the development of bending stress in the rim, since the parts between the arms now have some tendency to bulge outward. This last action is of more importance in broad, thin belt-pulley rims than in the balance-wheel type.

Whatever turning moment is transmitted from the shaft to the wheel-rim is carried through the medium of bending stresses in

Digitized by Google

the arms. This moment will be the whole torque upon the crank when the engine is belt-loaded; with other types of load, only the unbalanced moment acts upon the wheel. When the arm is cast with the hub, as in Figs. 325 and 326, it is in the condition of a beam fixed at both ends. When bolted at the hub, as in Fig. 327, it must be considered as having more or less freedom at the inner end, unless the bolts are very strong and very tightly fitted and screwed up hard. If there is freedom at the hub, then the arms must be held against bending mostly or altogether by the rim: which is a reason why large belt-wheels should be strongly ribbed inside the rim, to resist a bending load, and why the type of construction exemplified by Fig. 326 VI. is not a good one.

An important incidental advantage to making large wheels in a number of pieces is, that they are then freed from shrinkage strains, which are likely to be very severe in large and complicated castings.

Occasionally large wheels are built up from structural-steel shapes, riveted or bolted together; although this type of construction belongs rather to large winding-drums than to fly-wheels.

Of the accidents that occur in factory steam-plants, bursting of the fly-wheel comes next after explosion of the boiler as to frequency and as to the severity of its effects. It is due usually to defect or failure of the speed-regulating apparatus—which apparatus will be discussed in Chapter X.

(*l*) AIR-RESISTANCE TO WHEEL-MOVEMENT.—Cast wheels are now always made with arms of elliptical section, so as to meet as little air-resistance as possible: nevertheless, the fan-effect of a large wheel at high speed is very considerable, and some engineers have gone so far as to enclose the wheel with a smooth casing of sheet-metal, from rim to hub, so that it will not waste energy in churning air.

Digitized by Google

CHAPTER IX.

VALVE-GEARS AND THEIR ACTION.

§ 46. The Simple Eccentric-driven Valve.

(*a*) VALVE-MOVEMENT. — The general form of this simplest type of valve-gear is sufficiently illustrated in § 3; and the description of its action there given will serve as an introduction to the discussion now to be taken up. Our first task will be to develop convenient geometrical methods for showing the movement of the valve, or for determining its position corresponding to any position of the crank or of the piston.

The eccentric-rod is usually so long, in comparison with the radius of the eccentric, that the valve receives practically harmonic motion: then, for kinematic study, the whole mechanism, including the crank, may be "reduced" to the form shown in Fig. 331. This is a modification of Fig. 106; and by placing the slide beneath the eccentric-circle we emphasize the fact that the distance of the valve from its mid-position, or MV, is the same as the distance SE of the eccentric-center E from the vertical center-line SO. The position of the valve is defined by giving this distance, measured to the right or left: we shall call it the valve-travel, and denote it by t.

Now the movement of the valve is determined by the rotating eccentric (really a small crank), just as that of the piston is determined by the crank: and the relations as to velocity and acceleration derived in § 33 (*b*) and (*c*) apply equally well to the valve-slide, if α is taken to be the position-angle of the eccentric, measured from the left-hand dead-center.

Digitized by Google

(*b*) MOVEMENT DIAGRAMS.—In order to get the valve-trav corresponding to any crank-position, knowing the eccentric-ang δ or COE in Fig. 332, we must measure forward this angle δ a find the length of ES or t. But a truly serviceable diagram shou give t directly from the crank-angle, without the bother of r peatedly laying off δ. One diagram meeting this requireme is derived in Fig. 332, where the figure made up of the referenc line GH, the eccentric-radius OE, and the t-line ES is rotate

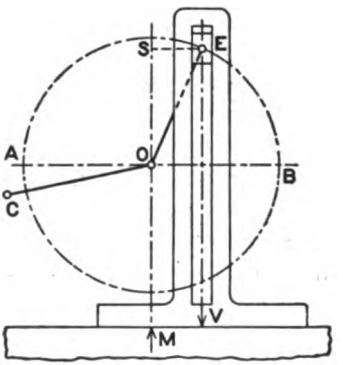

FIG. 331.—The Valve-mechanism Reduced.

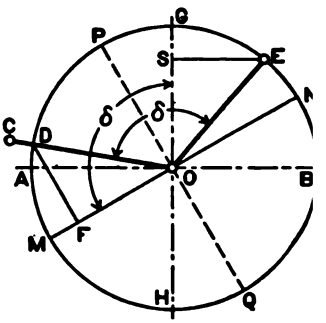

FIG. 332.—The Reuleaux Diagram.

backward about O through the angle δ. Then GH takes up t constant position MN, while OE coincides with the crank; a the perpendicular DF gives the value of t. If measured upwa from MN, parallel to OP, t is toward the right, or plus; if dow ward, or in the direction OQ, it is toward the left, or minus. Th is the Reuleaux or ordinate diagram of valve-movement.

The derivation and form of the Zeuner or polar diagram a given in Fig. 333. We first develop, at I., a new way of represen ing the motion of the slide in terms of that of the driving cran arm (here the eccentric-arm OE), as follows:

On the line OB, which is the right-hand dead-center positio of the eccentric, draw the circle OFB with r or OE as its diamete Then the intercept OF, cut from OE by this circle, is equal to for the right-angled triangles OBF, EOS, are always equal, hen also the sides OF and ES. Inspection of the figure, or a few tri

Digitized by Google

constructions, will show that when the eccentric lies across this circle, so that the intercept OF is cut from it directly, the valve is to the right: but when the eccentric has to be produced back through O in order to cross the circle—that is, when it is anywhere in the semicircle HAG—then the valve is to the left. Now, just as in Fig. 332, we change from a diagram in terms of eccentric-position to one in terms of crank-position, by rotating backward about O, through the angle δ, the figure made up of the circle OFB and the eccentric-radius OE. Then, in II., the circle takes a constant position on the diameter OD, and the eccentric is brought into continual coincidence with the crank. The inter-

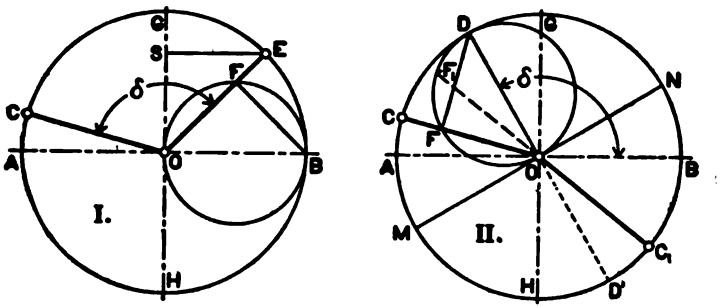

FIG. 333.—The Zeuner Diagram.

cept OF cut from the crank by the valve-circle measures t, to right or left as pointed out above.

The geometry of both these diagrams is very simple: but practice and familiarity are needed to give facility in using and understanding them. A simple model, in which the crank-eccentric COE is made actually to rotate over either diagram, is a help at first in making it clear that the perpendicular DF in Fig. 332, or the intercept OF in Fig. 333 II., is always equal to ES. But after this has been clearly realized, the eccentric should be discarded, and the diagrams thought of only as showing a direct relation between crank-angle and valve-position. Not only do these diagrams give the length and direction of t, but we can see which way the valve is moving by noting whether t increases or diminishes as the crank advances, and can get an idea of the

Digitized by Google

velocity of the valve by noting whether t is changing rapidly slowly.

(*c*) RULES FOR DRAWING THE DIAGRAMS.—It is obvious th if the eccentric be placed on its right-hand dead-center OB when t will have its geatest plus value—the crank will be perpe dicular to the base-line MN of the Reuleaux diagram, and w lie along the valve-circle diameter of the Zeuner diagram. Th a rule for constructing the Reuleaux diagram would be: Dra an eccentric-circle, of radius r; place the eccentric on its pl dead-center and draw a diameter at right-angles with the corr sponding position of the crank: this will give the base-line a determine the direction of $+t$. For the Zeuner diagram, place t eccentric on its plus dead-center, and on the corresponding cran line measure off r and draw a valve-circle on this radius as diameter. These rules become general if we make the followi assumptions: Let the initial dead-center, from which to estima crank-angle, be that for which the piston is farthest from t crank-shaft; let t be considered plus when it is from mid-positi toward the shaft; and let the eccentric-angle δ be always measur from crank toward eccentric, in the direction of rotation of t shaft:* then no matter which way the engine stands or run and whether or not the lines of piston-stroke and valve-stro agree, the above rules, and the direction-meanings of t as the stated, hold true.

PROBLEM 1. With values of δ near the middle of each of the fo quadrants from 0° to 360°, draw motion diagrams of both kinds, a show on each the crank-positions where the valve is at mid-stroke a where t has its greatest plus and minus values. In some of these di grams, take the engine conditions to be other than those of Fig. 11 as to position and as to direction of turning.

PROBLEM 2.—For given values of r and δ, draw a Reuleaux and Zeuner diagram: and on each find where the crank is when $t = +$ and $t = -\frac{1}{2}r$.

(*d*) THE COMPLETE VALVE-DIAGRAM. — Having establishe methods for completely representing and determining the mov

* An exception to this statement of general conditions is found in th case of the locomotive engine as usually viewed.

Digitized by Google

ment of the valve, we shall next consider how this valve, moving back and forth over the ports, effects the steam-distribution. In Fig. 334 I., a common slide-valve is shown in mid-position on its seat; and the controlling dimensions, besides r and δ as represented at II., are

s = outside lap, or steam-lap;
i = inside lap, or exhaust-lap.

Complete valve-diagrams for the left port, or for the head end of the cylinder, according to the two methods, are given at III. and IV.

When the crank is at OM—in IV. this line is tangent to the valve-circle, so as to have a zero-intercept—the valve is in mid-position. As the crank advances, the valve moves toward the right, the t-ordinate being positive and increasing in both figures: when C gets to Q, where $t = Qq = cO = s$, the valve-edge and port-edge are just in line, or the port is just beginning to open. For the crank on dead-center, the valve takes the position shown at V.; the travel is t_0 and the port is open by the small amount e, which is called the lead. When the crank is at any position OC, to which VI. corresponds, we have $t = CF = EO$: and it is evident that, in general, the port-opening is equal to $(t - s)$. In order to make a graphical subtraction of s from t, we draw in III. the lap-line QR parallel to MN at the distance s; and in IV., draw the lap-circle cKd, with s as radius. Then the segment QDR and the crescent cDd are identical diagrams of port-opening. We see that admission begins—or, we "have admission"—at Q, maximum opening is at D, while cut-off takes place at R. It is evident that the determining of admission and cut-off is simply a matter of finding crank-positions for which the valve is at a certain distance from mid-position.

After the crank passes R, the valve keeps on moving back from the right—as is shown by a plus but decreasing t—until it gets to mid-position again when the crank is at ON: then it goes toward the left, and soon opens the exhaust-port, this occurring when $t = -i$. The beginning and end of exhaust, or "release" and "compression," as also the port-opening during ex-

Digitized by Google

haust, are found by drawing the exhaust lap-line TS or the ins lap-circle fOe. In IV., instead of using only the plus valve-cir on OD, we save overlapping by drawing another valve-cir on OD′, for which the direct intercept shows left-hand or mir travel. This is convenient but not necessary, for it is evid that OT is determined equally well by either intersection, e or In finding release and compression from the Zeuner diagra the beginner is likely to confuse the intersections of valve-cir and inside lap-circle, especially when, as is usual, only the c valve-circle is drawn. Keep clearly in mind, not only that t valve must be at a certain distance for one of these events, b also to which side it must be, and which way it must be movi Thus, with the positive valve-circle alone, if we were to dr a crank-line from O through f for the release-position, we shou make a mistake: for while the valve is at the distance *i*, it toward the right; whereas it should be to the left and movi to the left, as is the case when the crank is at eOT. For the short-lap measurements the Reuleaux diagram is clearer a more accurate than the Zeuner.

On the exhaust side of this valve there is over-travel; for we measure off the port-width *b*, and draw VW parallel to S and the circle hkg at the distance *b* from the lap-circle, we s that the valve travels more than enough fully to open the po Sometimes there is a slight over-travel on the steam side: b more frequently—and most of the time in single-valve gea with variable cut-off—the maximum opening for admission much less than the width of the port.

For the other port, or the other end of the cylinder, the even and conditions are diametrically opposite to those shown, wi a symmetrical valve: if the laps are not equal, they must be drav in, and the required intersections found. Generally, both se of lap-lines should be drawn on a Reuleaux diagram, dotti those for the crank end. But in the Zeuner diagram, we usual draw only the one valve-circle; and, for equal laps, the san circle serves for both ports.

PROBLEM 3.—For given values of *r*, *δ*, *s*, *i*, and *b*, draw a comple diagram by each method, showing on it the steam-distribution—esp

Digitized by Google

cially admission, cut-off, release, and compression—for both ends of the cylinder; and test for completeness of opening and for over-travel on both steam and exhaust sides.

(e) VALVE AND PISTON DIAGRAMS.—Having established simple methods for finding the relation between the positions of the valve

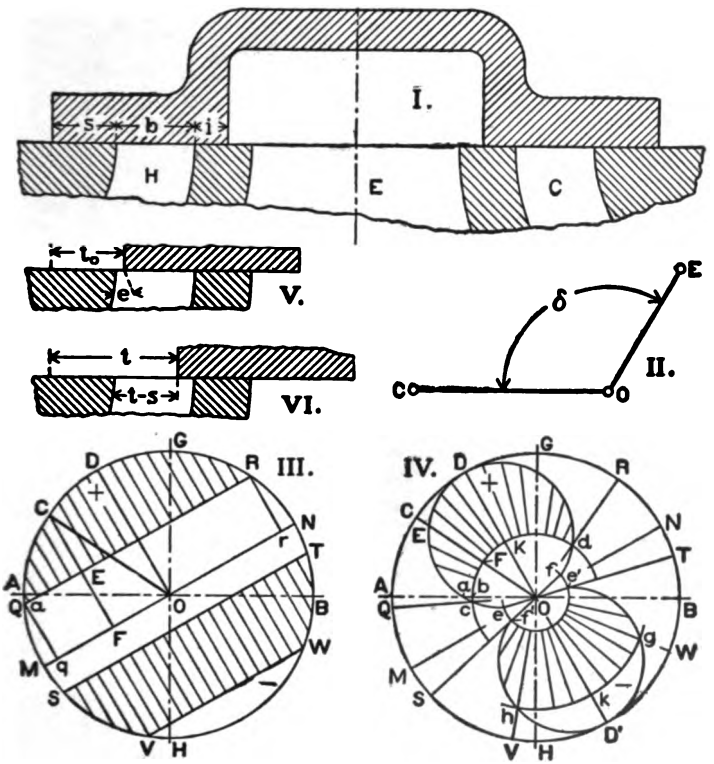

FIG. 334.—Valve-diagrams.

and of the crank, our next step is to extend these to the valve and piston. The primary, determining diagrams are shown in Fig. 335, where the valve-diagram (of either form) is combined with the piston-position diagram from Fig. 111: then DC′ and CF are simultaneous determinations. The distortion from sym-

Digitized by Google

metrical steam-distribution caused by the action of the connectir rod, notably the inequality in the cut-offs, is well brought c

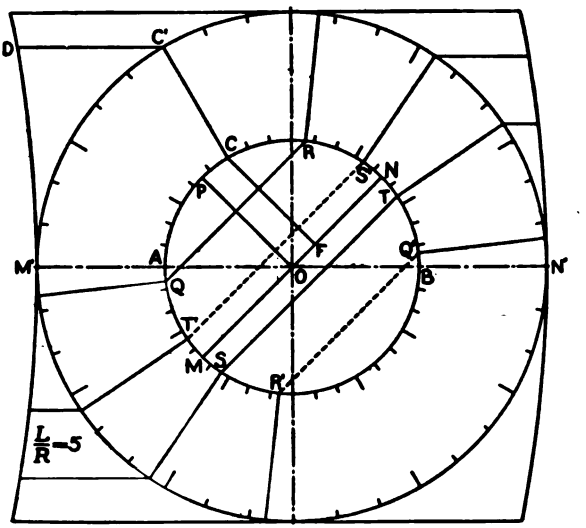

FIG. 335.—Combined Diagrams for Valve and Piston.

by this figure; but can be rather more clearly seen on the deriv diagram given as Fig. 336, where the valve-travel is plotted the stroke-line as a base.

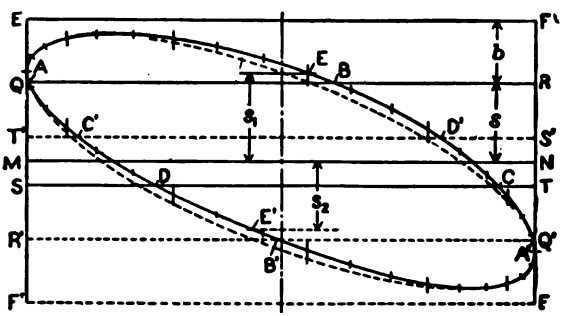

FIG. 336.—The Valve-ellipse.

The curve got by this method is elliptical in form, and wi harmonic motion for the piston as well as the valve it is a tr

Digitized by Google

ellipse. The effect of the connecting-rod is here shown by dotting in parts of the simpler curve. The lap-lines are now drawn parallel to MN: and the four events, admission, cut-off, release, and compression, are located by the intersections marked A, B, C, and D, respectively. Dotted lines and primed letters are for the crank end of the cylinder.

In order to equalize the cut-offs, making them the same as with harmonic piston-movement, the laps would have to be changed to the values s_1 and s_2, as marked on the figure. This would reduce the lead—which is shown by the distance from Q to the point where the curve is tangent to the end-line—almost to zero at the head end, while nearly doubling it at the crank end, besides changing the widths of the port-openings all through both admission-periods. A diagram of this type furnishes the most satisfactory data for a comparison of valve-action with realized steam-distribution, as shown by the indicator; and this matter of symmetry of action will be more fully discussed farther on.

For an autographic diagram, to be drawn by the engine and to serve as a test of the working of the valve-gear, especially with releasing gears of the Corliss and similar types, this elliptical curve is the most convenient, the motions necessary in the apparatus being the same as in the steam-engine indicator. With a device of geater complexity, and requiring careful adjustment, it is also possible to draw autographic diagrams of the Zeuner type.

Another way of representing the travel of the valve with reference to that of the piston is shown in Fig. 337, where two displacement-curves like Fig. 125 II. are laid out. Of course, the two movements are shown separately and are related through the crank-angles, as in Fig. 335; but the relation is simpler and more direct. Where the valve-travel must be found by laying out successive positions of a complex mechanism, instead of being got from a simple primary diagram as in Fig. 335, this last method collects the results into what is probably the most useful form.

Curve I. shows the travel of the piston along its stroke-line, the latter being represented by the whole ordinate between MO and NP; which is divided into ten equal parts by the horizontal ruling, for convenience in locating positions on the stroke. By

Digitized by Google

drawing in the lap-lines on II., we get the whole steam-distribu the important intersections having the same lettering as on 336. The corresponding piston-positions are determined by d ing vertical lines through A, B, C, etc., to curve I.

Having now applied to a simple example the available met of graphic analysis and representation, we will next take

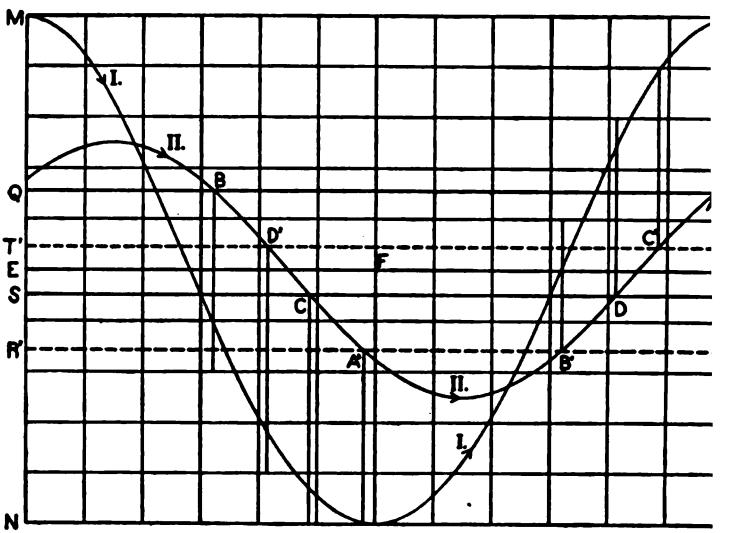

FIG. 337.—Developed Diagrams.

study of some of the principles which influence the form and act of the valve-gear.

(*f*) LAP, LEAD, AND ANGLE OF ADVANCE.—The evolution the engine-valve is illustrated in Fig. 338. The simplest poss case is shown at I., where the valve just covers the port w in mid-position, and is driven by an eccentric at right-angles the crank, so that its mid-position coincides with the dead-cen This arrangement has the very decided fault that the admiss is too long; the port being open during the entire half-revoluti or the whole stroke of the piston, as shown by the Reuleaux gram at II.

To shorten the period of opening, the first step is to give

Digitized by Google

valve a lap, so that it will not uncover the port until the eccentric has turned through a certain angle from the vertical, and will close it at the same angular distance before the other mid-position, as in III. Along with this change, the eccentric must be advanced beyond the position at right-angles to the crank, so that when the latter is on dead-center the valve will be at a distance from its mid-position equal to the lap plus the lead. The effect upon the diagram is shown at IV.: in V. the valve is sketched;

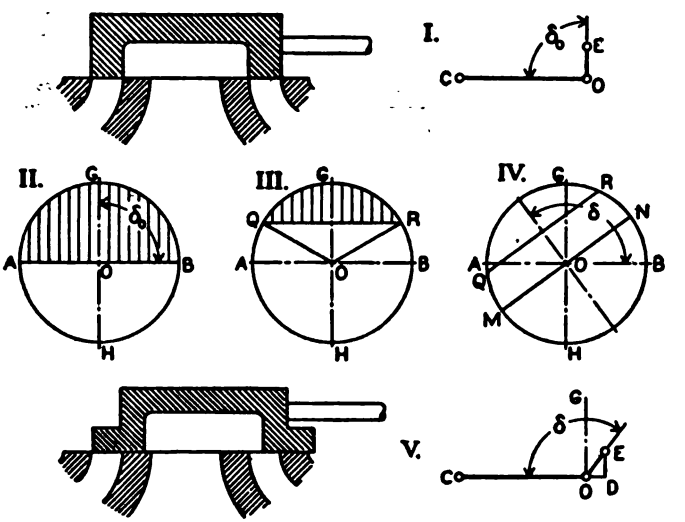

FIG. 338.—Evolution of the Valve.

and what is often called the angle of advance, $\gamma=(\delta-\delta_0)$, or $(\delta-90°)$ in the usual engine, is determined by the relation

$$OD=s+e=r\sin(\delta-90). \quad . \quad . \quad . \quad . \quad . \quad (311)$$

An important deduction from this figure is, that if the admission is to be very short, the lap must be very large relative to the radius, and the width of port-opening correspondingly small. This matter, together with the changes in the action of the valve on the exhaust side, will be considered when we come to valve-gears with a variable eccentric.

Digitized by Google

(*g*) TWO TYPES OF VALVES.—There are two typical forms the slide-valve, the flat and the piston form, and these are mu with a great variety in detail. Examples of both have be shown in the last chapter, and a more detailed description v be found in § 54. Another distinction now to be drawn, and c having to do rather with the present side of the subject, is illu trated in Fig. 339. The first arrangement, having the live stea at the ends and the exhaust in the middle, as in the plain f

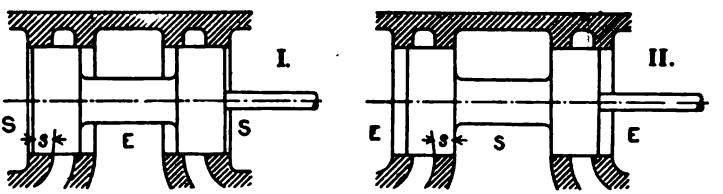

FIG. 339.—Direct and Indirect Valves.

valve, is called the direct valve; the second, with the steam the middle and exhaust past the ends, and with the laps inte changed accordingly, is called indirect. Another way of defi ing the two types is to say that they have respectively outsi and inside admission. And a general distinction, applying equal well to single, separate-function valves, is expressed by stati that the direct valve opens inward, moving toward the midd of the cylinder, the indirect valve opens outward—referring pa ticularly to the steam-edge at either end. In other words, t direct valve opens the port by moving in the direction of t piston-stroke for which this opening is a preparation, while t indirect opens against the stroke and closes with it.

The effect upon the position of the eccentric, due to a chan from the direct to the indirect valve, is shown in Fig. 340: t necessary reversal of each valve-travel distance is secured b reversing the eccentric in II. into a position diametrically opposi to that which it occupies in I. These are the characteristic ecce tric-settings for the two types of valves. In II. it is simpler t estimate δ as a negative angle, rather than to measure it all th way round in the plus direction.

Digitized by Google

(*h*) EFFECT OF A REVERSING ROCKER-ARM. — Sometimes a rocker-arm pivoted at or near the middle is interposed between the eccentric and the valve, as is the case, for instance, in the

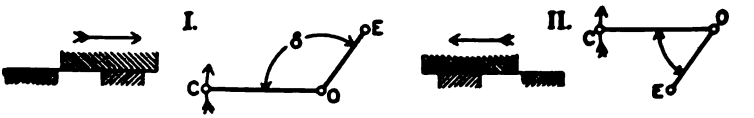

FIG. 340.—The Two Eccentric-settings.

engine shown in Figs 2 and 4. The result of this is brought out in Fig. 341, which is drawn for the locomotive, where the cylinder and axle interchange the characteristic positions for the stationary engine, as given in Fig. 110, but the zero dead-center is still taken at the left. To compensate for the reversal of motion by the rocker-arm, the eccentric must be diametrically reversed on the shaft; so that with a direct valve it has the setting proper

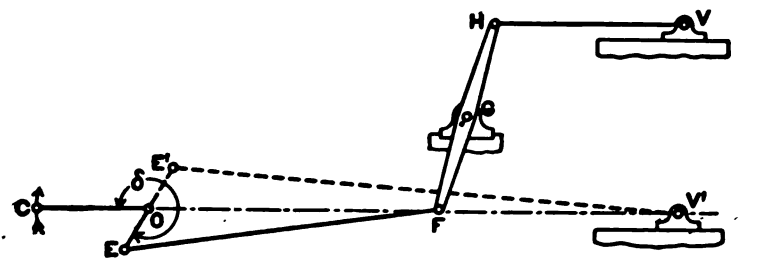

FIG. 341.—The Reversing Rocker-arm.

to the indirect, and vice versa. In this case, however, it is usual to disregard the double reversal in the mechanism, and to draw the valve-diagram as for a direct-connected eccentric, in the usual position. It is evidently from its analogy to this effect upon the eccentric-setting that the name "indirect valve" is derived.

(*i*) ENGINE WITH SEPARATE STROKE-LINES.—The occasional design in which the stroke-line A′B′ of the valve makes an angle β with that of the piston is typified in Fig. 342. The primary position of the eccentric, for the conditions of Fig. 338 I. and II., is now OG′, perpendicular to A′B′. Following the usual rule

Digitized by Google

of placing the eccentric on its plus dead-center OB′, we get C and have the angle-relations shown at I.

These relations are applied in II., which also shows the ch acteristic position of the diagram with an indirect valve. T data for the figure are r, s, and e, besides the angle β. Keepi to our established convention in the matter of directions, t

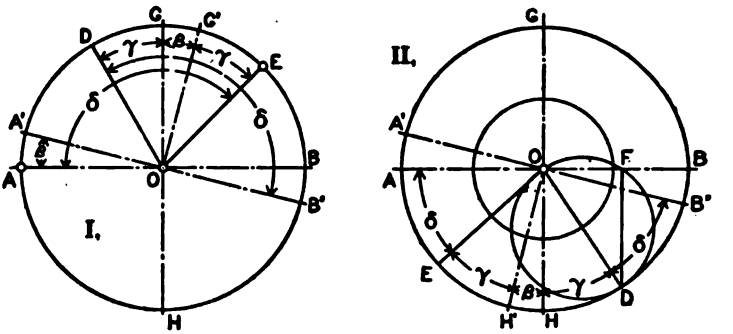

FIG. 342.—The Case of Separate Stroke-lines.

valve must have a negative travel $t=(s+e)$ for the crank at O. Measuring this off to F and drawing the perpendicular FD, v locate the valve-circle. The angle δ is now B′OD, instead BOD as in the usual arrangement.

§ 47. Geometry of the Valve-diagrams: Valve-gear Problems.

(*a*) PROOF OF THE MOVEMENT DIAGRAMS.—Besides the simp deductions of Figs. 332 and 333, proofs with more of the usu geometrical reasoning in them will now be given. In both, direct relation is established between the actual valve-travel, s determined by the eccentric-distance, and the correspondin ordinate of the diagram in terms of crank-position.

In Fig. 343, the right-triangle OES, whose side ES is t, is place upon the crank, in the position OCF. When the crank was on it zero dead-center, at OA, the eccentric was at OE_0; and, since COl is a rigid figure, the angles AOC and E_0OE must both be α. Th subtraction of α from COM leaves the constant angle $AOM=\gamma=(\delta-\delta_0)$, or the angle of advance. This angle being constant

Digitized by Google

all the OCF-triangles will have their bases on the same line MN; and a perpendicular upon this line from C, being always the other side of the triangle, will be equal to ES or t.

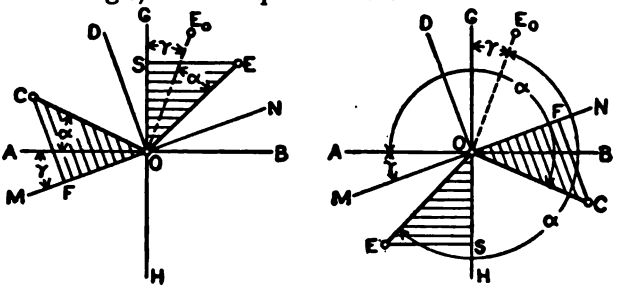

FIG. 343.—Proof for the Reuleaux Diagram.

For the Zeuner diagram, the triangle OTE, between the eccentric and the stroke line, is placed at OFD, with its side OT or t resting on the crank as OF. Then since $COE = \delta$ and COD is the same as EOT, we get

$$(\delta - COD) + EOT = DOT = \delta:$$

which shows that no matter what the crank-angle AOC, the hypotenuse OD of the right-triangle will have a definite, constant posi-

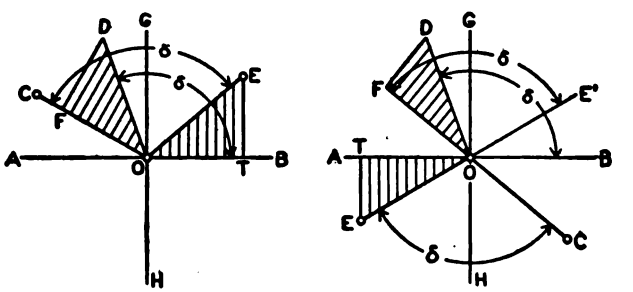

FIG. 344.—Proof for the Zeuner Diagram.

tion; and the apex F will then be on a circle of which OD is the diameter.

In these figures, the relations are also traced out for positions

Digitized by Google

where t is minus, or to the left: and good practice in the met can be got by applying it, with the same proportions of COE crank-positions in the second and fourth quadrants

(*b*) GEOMETRICAL RELATIONS.—Certain goemetrical proper of the valve-diagrams, which have frequent application in probl upon the working of the va as represented by these diagra are illustrated in Fig. 345.

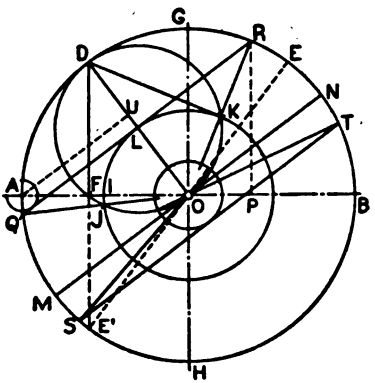

FIG. 345.—Geometrical Relations

1. If the crank be placed its zero dead-center OA, the p ticular position OE of the ecc tric-radius and the line OD be symmetrical with respect the vertical GH. And if crank be turned to OB, tl OE′ and OD are symmetri with respect to AB.

2. By drawing the two d grams together, the identity their determinations is made apparent: as also the fact that a cra position dependent upon a short valve-travel, as OS or OT, much more accurately located by the Reuleaux diagram than the polar. Even when using the Zeuner diagram alone, we m an accurate determination of S and T by drawing ST tangent the lap-circle and at right-angles to OD.

3. A perpendicular from D upon AB cuts off a length equal to the steam-lap plus the lead. Conversely, if we meas off $(s+e)$ and erect a perpendicular, this line is a locus of D. T complementary relation for the eccentric is shown in Fig. 338 and stated in Eq. (311): it is what determines the eccentric-an δ in practical valve-setting, and is used in Fig. 342 II.

4. The fact that DK is tangent to the lap-circle is especia useful when we have a locus of D and wish to draw the val diagram which will give a particular cut-off.

5. The line DO bisects the angle of admission QOR and t angle of release TOS.

6. A circle from A with the lead e as its radius is tangent to t

Digitized by Google

line QR· self-evident on the Reuleaux diagram, this can be independently shown for the Zeuner from the equality of the right-triangles AUO, DFO.

Any event in the valve-action can be located by giving either the crank-angle at which it takes place, or the corresponding piston-travel with infinite connecting-rod. Thus the cut-off is fixed either by the angle AOR or by the ratio of AP to AB: but the admission-line OQ can be located only by the angle of lead, AOQ or ϵ.

(*c*) PROBLEMS ON THE SIMPLE VALVE-GEAR.—The following résumé of the symbols used in this discussion will be found convenient:

r = radius of eccentric, half of total travel of valve.
l = length of eccentric-rod.
δ = eccentric-angle, measured from crank toward eccentric in direction of rotation.
t = valve-travel, or distance from mid-position at any instant.
s = steam-lap, outside on a direct valve, inside on an indirect.
i = exhaust-lap.
b = width of steam-port.
e = lead, measured in port-opening.
ϵ = angle of lead, plus when measured from admission-line toward dead-centre.

A few practical problems will now be given, all having a direct bearing on valve-setting or design. Others can be devised, but many of them are useful only as illustrating the geometrical possibilities of the diagrams.

PROBLEM 4. Given r, s, and e: find δ and cut-off.
PROBLEM 5. Given r, ϵ, cut-off, release: find δ. laps, and compression.
PROBLEM 6. Given r, e, cut-off, and compression: find δ and release.
PROBLEM 7. Given s, e, and cut-off: find r and δ.

(*d*) VALVE-SETTING.—The amount of adjustment possible after the engine has been designed and built varies with the type of valve-gear. In many single-valve engines, where the eccentric is carried by a shaft-governor or where it is keyed to the shaft, everything depends on its being correctly designed but sometimes the eccentric

Digitized by Google

can be rotated on the shaft, so as to change the angle δ, and clam in any desired position. In most engines the length of the valve- or of the eccentric-rod can be varied; and in the more comp valve-gears there are likely to be a number of points at wh this kind of adjustment can be made.

The two conditions to be met are, first, that the valve-movem shall be symmetrical, so that the steam-distribution will be nearly as possible the same for the two ends of the cylind second, that it shall be properly timed with reference to motion of the piston.

With the engine cold and the valve-chest open, the two adju ments, of rod-length and of eccentric-angle, would be made toget until the leads were equal and had the proper value—the eng being repeatedly placed first on one dead-center, then on the otl Or, if desired, equality of leads may be partly sacrificed to equal of cut-offs. With the help of the indicator, the valve can be with the engine in running condition, stopping it for adjustm after each trial. This latter is, in many cases, the final method

(*e*) CHANGE OF ROD-LENGTH.—The effect of this adjustm is shown in Fig. 346: the dotted lines show symmetrical worki or equal laps, the full lines the res of lengthening the rod, in a dire valve engine; two circles being us so as to separate the indications the two ends. Referring to Fig. 3 I., we see that to shift the m position to the left will increas and i', decrease i and s'—this no tion distinguishing the ends just does that used for the events on t diagram. Then for the head en admission is shortened and exha lengthened; while the opposite effe are produced in the other end.

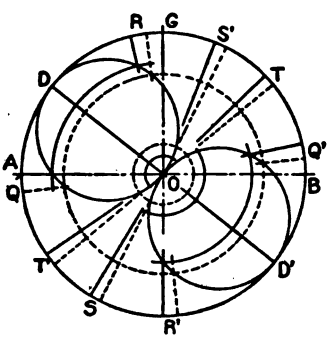

FIG 346.—Rod-length Changed.

Adjustment under the indicator is illustrated in Fig. 347. shown by I., there was quite an inequality in the cut-off and in t power developed in the two cylinder-ends: this could also be detect

Digitized by Google

by the sound of the exhaust-puffs. Through uncertainty as to the type of valve, the rod-length was at first altered in the wrong direction, with the effect shown at II. Reversing this, and correcting in the proper direction, the symmetrical steam-distribution shown at III. was secured.

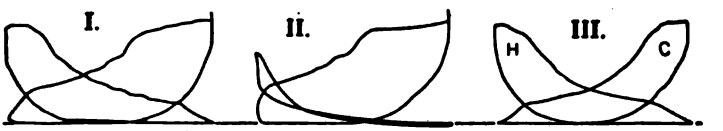

FIG. 347.—Valve-setting with the Indicator.

The matter of proper setting of the eccentric will be discussed in connection with the Corliss valve-gear. In any case, a thorough understanding of the working of the mechanism is fundamental to an intelligent treatment of faults in its operation.

§ 48. The Shifting Eccentric: Variable Steam Distribution.

(*a*) MOVING THE ECCENTRIC-CENTER.—Following the line of development suggested by Fig. 338 III. and IV., and carried forward in Relation 3 under Fig. 345, we see that if the center of the eccentric be shifted along a line at right-angles to the crank-arm, changing both the length and the inclination of the eccentric-radius, the cut-off will be varied without changing the lead. This fundamental principle of the whole class of single-eccentric variable cut-off engines (as well as several allied forms) is illustrated in Fig. 348.

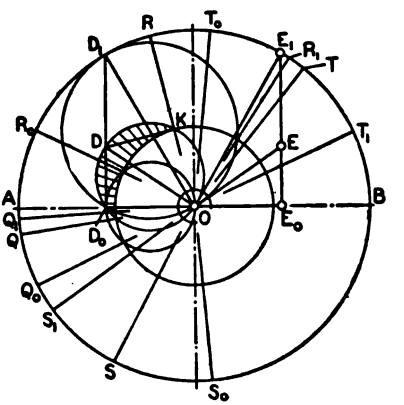

FIG. 348.—Shifting Eccentric with Constant Lead.

The eccentric is supposed to be carried on a cross-slide keyed to the shaft so that the center can be moved along the path E_1E_0, and is either clamped in any particular position or held in place by the governor. For the longest radius OE_1 the valve-circle

Digitized by Google

is on OD_1; and all the events, cut-off at OR_1, release at OT_1, and exhaust-closure at OS_1, are late.

The intermediate diagram is located so as to give cut-off at three-eighths of the stroke. by drawing KD perpendicular to the radius OR: and along with the change in cut-off go smaller changes in release and compression, all these events being made earlier by the increase of δ.

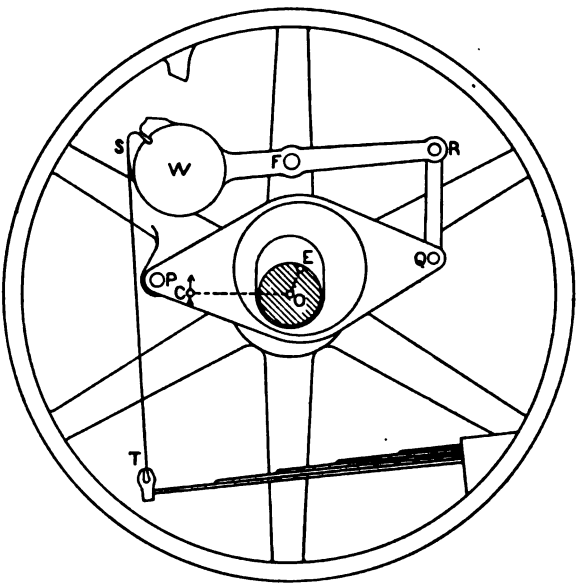

FIG. 349.—The Shaft-governor.

The limit of movement of the eccentric is usually at E_0, on the crank-line: and the corresponding steam-distribution is shown by the circle on OD_0. The very small opening of the port, together with the great compression from S_0, produces a steam diagram whose effective area is not far from zero.

(*b*) THE SHAFT-GOVERNOR.—Usually the eccentric does not work in guides so as to move along a straight line, but is carried by a part of the governor which is pivoted on the wheel near a line parallel to the crank. A governor almost like that on the engine described in Chapter I. is outlined in Fig. 349: it differs

Digitized by Google

chiefly in that there is here an actual eccentric, surrounding the shaft, instead of a small pin off the end of the shaft. The whole piece PQ is called the swinging eccentric or the eccentric-pendulum: the center E moves along an arc struck from P, and its position is controlled by the governor, after the manner explained in § 2 (*j*).

The working of the governor is another subject, and will be taken up in the next chapter. For present purposes, all we need to know is the shape of the locus of E and the limits of its length. The required dimensions are shown on Fig. 350, where the different possible arrangements are given and a conventional method is developed for stating, as concisely as possible, the essential data.

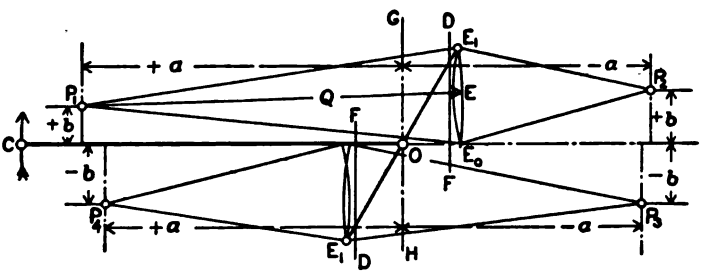

FIG. 350.—The Eccentric-pendulum

With the crank-line CO and the perpendicular GH as axes, the pivot P is located by the co-ordinates a and b, the algebraic signs having the meanings indicated. In general, for any position of the crank, a is plus from O toward C, b is plus in the direction of the motion-arrow through C. Then the pendulum-radius Q or PE, and the limiting eccentric-radius r_1 or OE_1, complete the data. In the absence of specific statement, E_0 is supposed to be on the line CO.

Of the four characteristic positions of P, numbers 1 and 2 belong to the direct valve, 3 and 4 to the indirect. The offset b may have any value from zero up to r_1; making it equal to half the vertical projection of r_1 gives the nearest approximation to the straight-line locus of Fig. 348. In any case, drawing a line DF

Digitized by Google

at a distance equal to the steam-lap s from GH will show clea how the lead will vary as E changes its position.

(*c*) DIAGRAMS FROM AN AUTOMATIC CUT-OFF ENGINE.—In t example worked out in Fig. 351, the data are: $a=+5\frac{1}{2}''$, $b=+1$ $Q=6\frac{3}{4}''$, $r_1=2\frac{5}{8}''$, $s=1''$, $i=0$. The eccentric-locus, from E_1 the crank-line, is divided into three equal parts, and four Reules diagrams are drawn, a part of the lap-circle helping to locate t

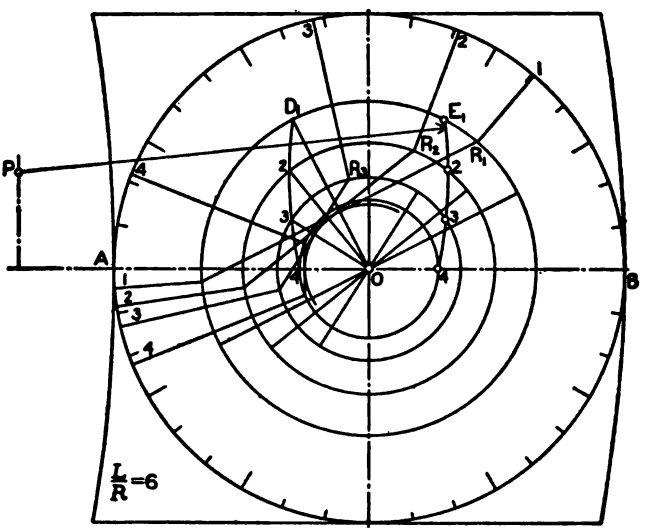

FIG. 351.—Valve-diagrams from a Shaft-governor.

several lap-lines. The change in admission and cut-off is sho by drawing in the corresponding crank-positions, while relea and compression would be located by simply extending the ba lines of the diagrams.

The curves in Fig. 352 are plotted from the diagrams in Fig. 3 The four distances QE, Q'E', NH, MH', are all equal to the po width b, which is 2'': and even with the full stroke of the val the port is not fully opened for admission, though there is ov travel on the exhaust side in this one case. Curve No. 3 giv only a moderately early cut-off, and yet we see how small is t port-opening, and how great an effect can be produced by ev

Digitized by Google

change in the length of the valve-rod. Note that in case e the eccentric is in line with the crank, the motion-diagram to a single line, which would be straight with the piston in ic motion, but is here slightly curved.

PROBLEMS ON THE SHAFT-GOVERNOR.—The following data m actual engines, as were those for Fig. 351. In each n, get the eccentric-locus first, and then draw valve-diagrams greatest eccentric-radius r_1, for cut-off at one-third of the and for the earliest cut-off. One-third is chosen because give an effective cut-off, referred to the boiler-pressure, t one-quarter of the stroke; and it is upon this cut-off that ed power of the engine is based. The Zeuner diagram is better for illustration, the Reuleaux for accurate determi- of the whole movement.

BLEM 8. Direct valve, $a = +14''$, $b = 0$, $Q = 15''$, $r_1 = 1\frac{1}{4}''$, $s = 1\frac{1}{16}''$,

BLEM 9. Indirect valve, $a = -1\frac{1}{2}''$, $b = -\frac{7}{8}''$, $Q = 2\frac{1}{4}''$, $r_1 = 1\frac{7}{8}''$, $i = \frac{1}{8}''$.

BLEM 10. Direct valve, $a = +5\frac{1}{4}''$, $b = +\frac{3}{4}''$, $Q = 6\frac{1}{4}''$, $r_1 = 1\frac{5}{8}''$, $= \frac{1}{4}''$.

WIDTH OF PORT-OPENING.—Ideal valve-action would be erized by a very quick (practically "instantaneous") ent in opening and closing the port, together with a very dth of opening. Fig. 352 shows how far these require- fail of fulfilment, especially when the cut-off is early. Let pose that in this particular engine the width of the port portioned so as to give a certain maximum velocity of low, say 200 ft. per sec., after the manner of § 43 (*u*). To hat width of opening would give this same velocity at int in the stroke, we draw the dotted curves V_1 and V_2 352, using the factors in Table X., which are, according (*d*), ratios of piston-velocity to crank-pin velocity as well s of force. Equality between rate of steam-flow and rate n-displacement requires that, for a certain constant steam- the area or width of the port-opening shall vary as the the piston. We therefore multiply the total width belonging to each crank-angle, and lay off the result

Digitized by Google

as an ordinate from the lap-line or port-edge, QR, Q'R'. H the width of port is taken to correspond with the velocity at ¹ or that of the crank-pin, so that the curves go just a little way c side the line EF, E'F'. One very evident conclusion is that actual velocity of flow past the valve must greatly exceed assumed value of 200 ft. per sec., especially at early cut-off, w consequent large drop in pressure toward cut-off. Another p is, that the opening ought to be a little greater at head end tha crank end, on account of the somewhat higher velocity of piston in the first part of the forward stroke.

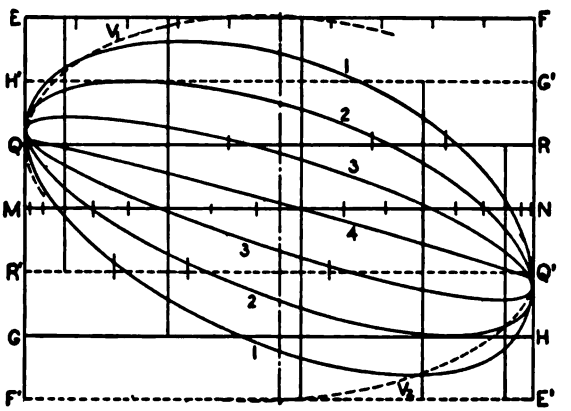

FIG. 352.—Stroke-line Diagrams from Fig. 351.

(*f*) SYMMETRICAL ADMISSION.—The possibility of equalizi the cut-offs—in the sense of making them take place at the sa fraction of both strokes—by changing the laps, has been alrea suggested under Fig. 336. In Fig. 352, the mean cut-off for ea curve (or that which would occur with harmonic motion of t piston) is indicated by the short cross-lines; and it appears th the amount of change in lap required varies with the drivi eccentric. These curves are re-drawn in Fig. 353, with the la changed so as to give equality for curve no. 3, which will nc show cut-off at four-tenths of each stroke.

This figure illustrates excellently the important principle th equality in the amounts of steam admitted—a far more essenti

Digitized by Google

requirement than mere symmetry in valve-events—depends not only upon the length of the period of admission, but also upon the width of opening. The throttling effect would now be so much greater in the head end than in the crank end that the steam diagram would be much smaller in area.

With small openings, the diagram will be very sensitive to slight changes; so that, in adjustment under the indicator, it

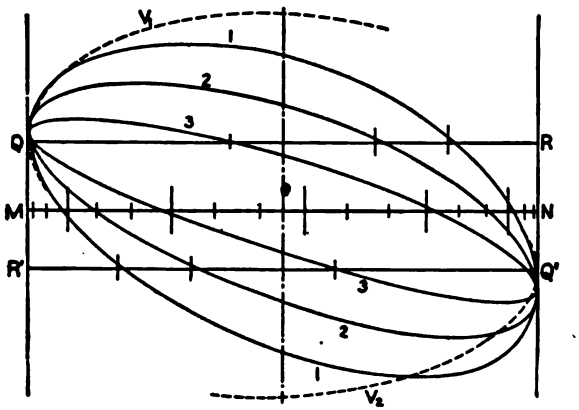

FIG. 353.—Cut-offs Equalized.

would be found that only a minute alteration from the conditions in Fig. 352 would be needed to make the admissions equal for the smaller powers of the engine.

(*g*) INDICATOR DIAGRAMS.—To illustrate the matters just discussed, and also to show the characteristic action of a valve-gear with shifting eccentric, the set of diagrams in Fig. 354 is derived from Fig. 352. These are made-up diagrams, not exactly determinable from the valve-action, but also based on experience with engines of this class. Referring to § 18 (*d*), we see that to know the point on the stroke at which the valve closes is, in itself alone, a very insufficient determination of the amount of steam admitted. With this we must know, or be able to estimate fairly well, the drop in pressure due to throttling, down to the mechanical cut-off. Thus the cut-off ordinate at G can be located by simple projection from Fig. 352: but it is only from experience that we

Digitized by Google

can tell about where the steam-curve will cross this line. T
point of complete cut-off by the valve will be on a curve or lo
typified by QQ, which is convex upward, so as to drop at
increasing rate as the cut-off becomes earlier.

Besides applying the four cases of Fig. 352, the diagram mar
A is drawn for complete cut-off at one-fourth of the stroke.
form of the smallest diagram, No. 4, is rather uncertain, as
action of the cylinder walls upon the relatively small body
steam is likely to modify the curves quite materially: for
larger diagrams, equilateral hyperbolas are used in this figu
for both expansion and compression: but with very early cut-
and high compression, it was found necessary to modify t

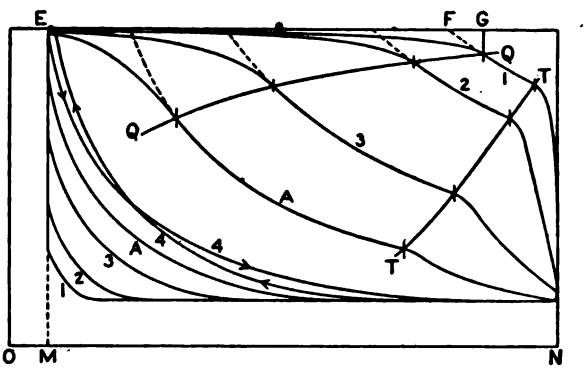

FIG. 354.—The Variable Steam Diagram.

curve in order to make the diagrams correspond roughly wi
practical results.

The points of release will also lie in a locus which should be
fair curve. And on account of throttling by the closing val
the pressure at the instant when the port is completely clos
to exhaust, or at the true beginning of compression, will be
little higher than the earlier uniform back-pressure during e
haust.

Speed of running will affect quite materially the steam-d
tribution realized from a certain valve-movement. This is pa
ticularly well illustrated by the indicator diagrams in Fig. 35

Digitized by Google

which were taken from a locomotive on the same run and with the same valve-action—that is, with the reverse-lever in the same notch—but at different speeds. These were, 30 miles per hour for the larger, full-line diagram and nearly 80 for the smaller, equivalent to 128 and 330 R.P.M. respectively, with 80-inch driving-wheels. The diagrams are reproduced in true proportion, except that the difference between the back-pressure lines is slightly exaggerated. The throttle-valve was a little wider open for II. than for I., but even then the drop in pressure from the boiler (B.P.) to the steam-chest (S.C.P.) was much greater at the higher speed: and there is a similar increase in the loss of pressure by the steam in getting into the cylinder. The indicated steam consumption is just about the same, however, for the two diagrams; and since the cylinder-condensation is less at the higher speed, the smaller diagram represents a higher thermodynamic efficiency, in spite of the increased wire-drawing effects.

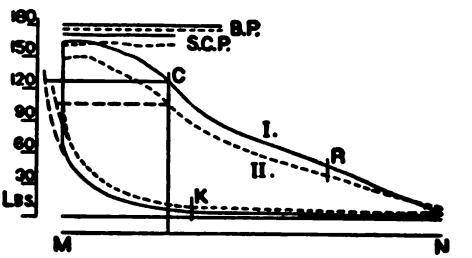

FIG. 355.—Diagrams at Different Sp

(*h*) VALVE-GEAR PERFORMANCE.—This is shown in ultimate terms by curves such as are drawn in Fig. 356. The base-line represents the eccentric-locus developed; which is chosen, out of several possible bases, partly because it puts the data from the valve-gear into good shape for use in a discussion of the action of the governor. Curve I. shows the cut-off by the valve, EG/MN in Fig. 354, while II. is the effective apparent cut-off at boiler-pressure, EF/MN, got by producing the expansion-curve backward. It is noteworthy that the absolute difference between these curves is nearly constant in this case. Curve III. shows the length of the compression-period, likewise expressed as a fraction of the stroke: and IV. represents the manner of variation of the M.E.P., here given as a fraction of the gage-pressure, or of the boiler-pressure above the atmosphere in Fig. 354.

A set of curves like this, plotted from the actual indicator

Digitized by Google

cards, gives a very convenient and useful record of the performa of an engine. It is characteristic of the type of valve-gear

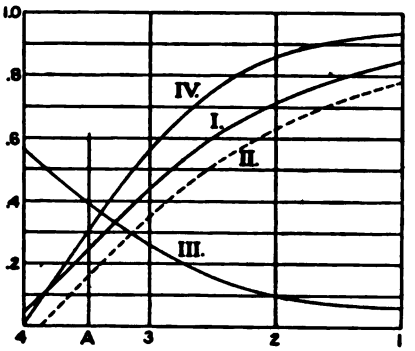

FIG. 356.—Valve-gear Curves.

the outer part of the ec tric-locus, from 1 to 2, i little use for governing engine, because the M.I varies so slowly—here c from about 93 per cent 86 per cent. of the boi pressure for this whole ra of movement.

By plotting results fr the valve-diagrams of a nu ber of engines of the sh governor class, the writer found an average law for the relation between compression a cut-off to be

$$n=0.5-0.8m+0.4m^2, \quad . \quad . \quad . \quad . \quad . \quad . \quad (3$$

where m is the apparent cut-off by the valve, the same as Eq. (89), § 18, and n is a similar measure of the period of co pression, as in curve III. on Fig. 356.

§ 49. Secondary Influences and Special Cases.

(*a*) EFFECT OF THE ECCENTRIC-ROD.—While the distortion fr harmonic motion, on account of the angular movement of t eccentric-rod, is usually very small, it must sometimes be tak into account. In the fundamental diagram in terms of the eccentri angle (the primary form of Fig. 332), this is done by striking a arc with the rod-length as radius, after the manner of Fig. 11 To show the travel of the valve from its true mid-position, v should pass this arc through the center O as in Fig. 357 I.: ar it is very easy to see that the travel-distance ES will be almo exactly as given by the harmonic diagram when the valve is ne the ends of its stroke, but that the error in this simple diagra will increase as the valve approaches mid-stroke.

Digitized by Google

The "true mid-position" just referred to is midway between the extremes of valve-movement; or, as a more general description, it is located by measuring off from O, upon the stroke-line, the rod-length l. But while this is, at first sight, the obvious datum-point from which to estimate valve-travel, it is not the point with reference to which the travel is most closely given by the common valve-diagrams, as will now be made clear.

In Fig. 357 II., the crank-eccentric is placed on the two dead-centers, at C_1OE_1, C_2OE_2; and arcs with l as radius are drawn at the same distance (equal to the lead) inside of E_1 and E_2. Now it is entirely reasonable to assume that equal laps are correlative

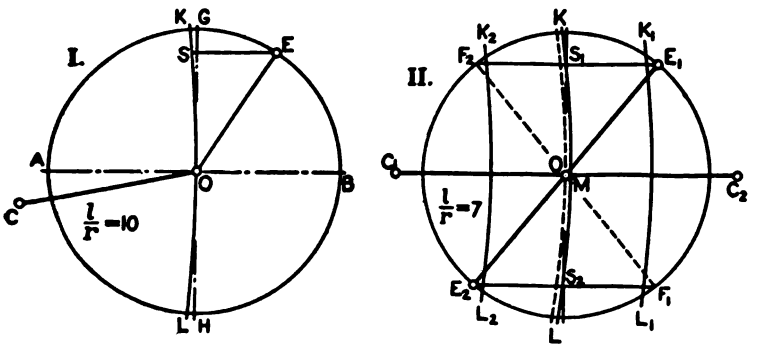

FIG. 357.—The Center of Movement.

with equal leads; and if this is true, then the distances from E_1 and E_2 to the reference-arc for mid-position must be equal, or this curve must agree with GH at the points S_1 and S_2, rather than at the center O. Striking off l from S_1 or S_2, we should locate the corresponding reference-point at the distance OM from the middle of the valve-stroke. Using this as the center of movement, the valve-diagrams will give the travel very exactly at admission and cut-off, where there is most need of its being accurately determined; and will have an error, here much exaggerated by the use of short rods, for very long and very short travels. The rod-ratio l/r lies usually between 15 and 25, with 20 as a good average value.

An interesting fact brought out by Fig. 357 II. is that, with

Digitized by Google

equal leads, port-openings due to right-hand movement of t eccentric are less than those due to movement toward the le It is desirable that the openings be larger, if anything, for t head end than for the crank end, because the piston moves fast in the first part of the forward stroke than of the return strok With the common, direct valve, then, the effect of angular mov ment of the eccentric-rod is against equality in the steam-d tribution: and an arrangement in which movement of the ecce tric to the left serves the head end—as with an indirect val or with a direct valve indirectly driven—has a small inhere advantage over the opposite arrangement.

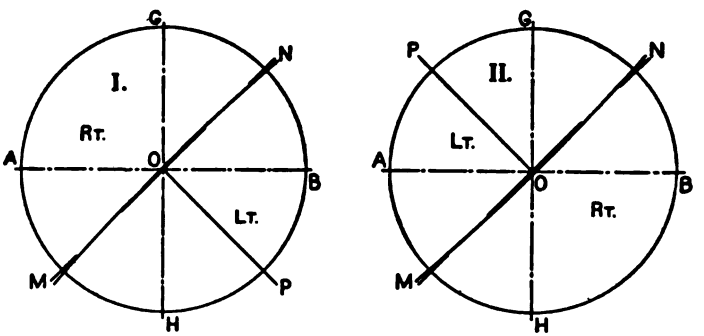

FIG. 358.—Rod-effect in the Reuleaux Diagram.

(*b*) THE EXACT REULEAUX DIAGRAM.—Rotating Fig. 357 II backward through the angle δ, we get exact Reuleaux diagram as shown in Fig. 358, I. for the direct valve, II. for the indirect For the latter, with this diagram, it is better to reverse the direc tion-meaning of the ordinate, since left-hand travel, along OP is what goes with opening of the left or head-end port. This i simpler than to produce each crank-line through the center an take the ordinate from the point where it hits the other side o the circle (at the same time reversing the base-curve). Bu with the Zeuner diagram it is better to adhere to the usual con ventions, and draw a single valve-circle, for the indirect valve in the third quadrant, as in Fig. 342 II.

In any case, under the usual rule for locating OP, the direction

Digitized by Google

of convexity of the reference-curve MN is determined wholly by the eccentric-setting, without regard to the manner of driving the valve. A reversing rocker-arm changes the direction-meaning of the ordinates in Fig. 358, without affecting the curve; and, as hinted at the end of the last paragraph, interchanges between the ends of the cylinder the effects of the eccentric-rod in modifying the steam-distribution.

The Reuleaux diagram has an advantage over the Zeuner in that this action can be shown directly: an exact polar diagram can be got only by plotting successive ordinates and tracing a special curve.

(*c*) Rod-effect with Shifting Eccentric.—This is illustrated in Fig. 359, where the four eccentric-circles from Fig. 351 are reproduced, with the locus of E at EC and at DF, in the two positions for crank on dead-center. The two reference-arcs K_1L_1, K_2L_2, are drawn, after the manner of Fig. 357 II., so as to give equal leads for latest cut-off: and it is clear that the leads will become increasingly unequal as E moves in along EC and FD. This effect is here a good deal exaggerated; but a self-suggested alteration would be to equalize the leads for the early cut-off which mostly prevails, and let the extreme conditions be non-symmetrical.

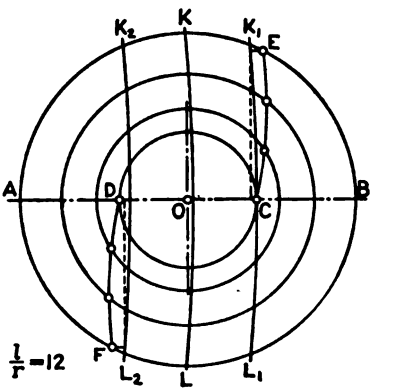

Fig. 359.—Rod-effect with Shaft-governor.

(*d*) Influence of the Lead.—The matter of proportioning this element of the valve-action so as to get the best results is one that can hardly be reduced to definite terms. In general, two objects are to be kept in view: first, to have the engine run smoothly, without a too sudden reversal of pressure at the end of the stroke; second, not to waste any of the possible area of the steam-diagram by late admission. Where the engine has what we may call a rotary load, or delivers its power through the shaft, a slight variation

Digitized by Google

in the time when the valve opens can have little effect: but whe the load acts directly upon the piston-rod, as in a pump with fl wheels especially, the growth of the driving-pressure should bare precede that of the resistance, at the beginning of the strok and this may call for a very small or even for a negative lead. A to the matter of getting the full steam-pressure before the pist begins its stroke, it is evident that speed, clearance-volume, ar height of compression all enter as important elements. In ar case, the angle of lead—a measure of time—is rather more importa than the absolute width of opening. In engines where the admi sion is controlled by a fixed eccentric, this angle will usually l between 5° and 10°.

(*e*) VARIATION IN LEAD.—Engines of the shifting-eccentr type, with the shaft-governor, show considerable variety in th location of the pivot-point P, Fig. 350, and in the manner of vari tion of the lead. As typical cases in this respect, consider the di grams sketched in Fig. 360. The point P is on the same side

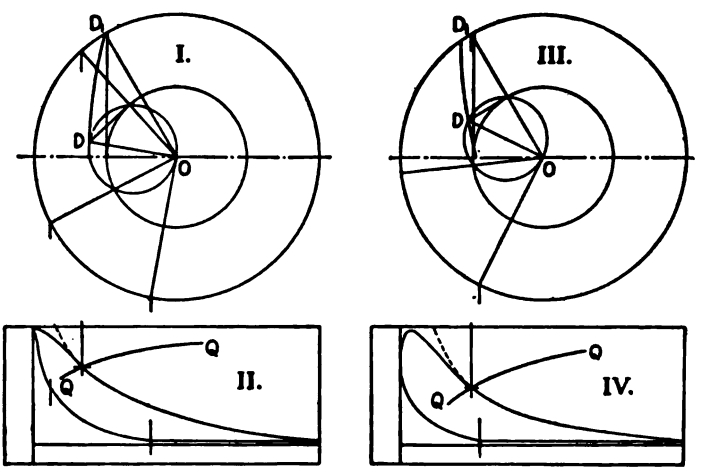

FIG. 360.—Different Ways of Varying the Lead.

the center in both I. and III.; but in the first case it lies on the crank line, in the second it is on a line through D_1. The valve-diagram in I. is drawn for cut-off at one-sixth of the stroke; and through

Digitized by Google

rge lead quite a wide opening of the port is secured, even with very early cut-off. In III. and IV., the mechanical cut-off, tant of complete closure, is at one-quarter stroke: the greater in pressure, due to throttling on account of the small opening, rly shown, especially by the lower position of the curve QQ. ne advantage of the arrangement at III. is that the governor ompletely shut off steam from the engine, which it cannot th the proportions in I. Further, the eccentric moves through newhat smaller distance, for a given range of power, in III. in I. It is suggested by the steam diagrams, II. and IV., the question as to the best method of governing the engine small loads is here involved—this question being, whether it ter to throttle the steam or to make the cut-off very early. out more than touching the outskirts of this rather extensive ct, we may remark that when cylinder-condensation is taken account, a small-power diagram like IV. may give just as economy as one like II., in spite of the increased throttling

) Effect of Lost Motion.—In a mechanism like the valve- with a number of joints—and especially in the complicated , such as the link-motions and the Corliss gear—there may nsiderable lost motion between the eccentric and the valve, joints are allowed to become at all loose. The effect upon -movement and steam-distribution can be very nicely shown the diagram, as is illustrated in Fig. 361.

is safe to assume that friction of the valve is the predominat- rce in the valve-gear—even though, at high speeds and with l-balanced valve, inertia-force may have a greater value near nds of the valve-stroke. Under the control of friction, the will lag behind its ideal position by an amount equal to half otal free-play in all the bearings. In I., this is shown by ng the semicircle GMD to the left, and FNE to the right, ng them from the centers O_1 and O_2 respectively. That is, half of the motion-circle is given a displacement opposite e direction of valve-motion in the stroke which it represents. "right" and "left" refer, of course, to movement resented by the diagram, so that GF is right,

Digitized by Google

FG is left. In ideal working, each journal will be concentric with its bearing; when loose, half of its total free motion will bring it into contact on either side. At each end of the stroke the valve will pause, as shown by the straight lines DH and EK, while the "back-lash" in the mechanism reverses.

Now all the events of the steam-distribution will be a little late. In the right-hand stroke these are, taking them in order, crank-end cut-off R′, head-end compression S, crank-end release T′, head-end admission Q. And it is evident that this general

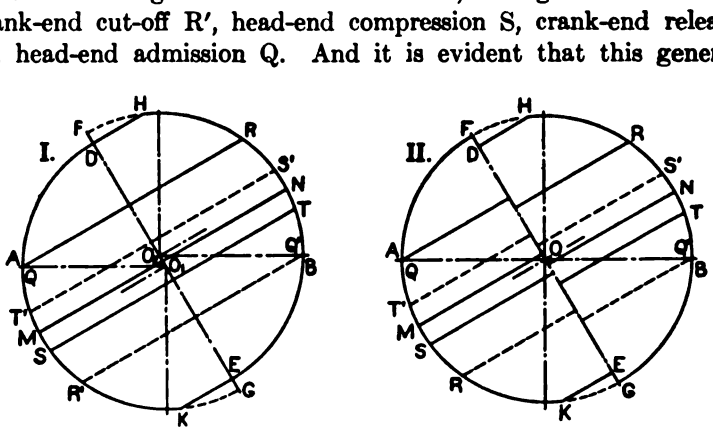

FIG. 361.—Effect of Lost Motion.

retardation could be compensated by giving the eccentric a slight extra advance.

Instead of displacing the two halves of the circle, it is rather simpler, graphically, to shift the reference-lines in the other direction, as at II. Since these can be thought of as representing the valve-seat, we move them ahead, in the direction of the movement of the valve, so that in the ideal movement represented by the circle the valve would take a little longer to reach any particular position.

(*g*) EFFECT OF A NON-CENTRAL STROKE-LINE. — The general case of the slider-crank mechanism, in which the stroke-line of the slide does not pass through the center of the shaft, finds frequent application in one class of valve-gears, the "link-motions": and is sometimes used in single-eccentric gears, for a purpose which is discussed in the next article. To see how the movement of the slide is modified from that in the usual case, consider Fig. 362.

Digitized by Google

First of all, the rod-length l is measured off from O to P_0, and swung about O so as to locate on the stroke-line MN the ideal mid-position P. Then from P is struck the arc KL; and for any position of the eccentric (or crank), as OF, we have only to make $FQ = l$, draw FT parallel to MN, and join PT, in order to get a parallelogram FTPQ and show that FT is always equal to the travel-distance from P.

Now the dead-points are not at A and B, but at C_1 and C_2, where the crank and rod coincide on a line through the center: and the total travel is greater than the diameter of the circle, as appears when we locate M and N by striking off the lengths AP_0 and BP_0 from O. The reason for this excess is most clearly seen by drawing the distance-lines C_1D_1, C_2D_2: which shows also that the two ex-

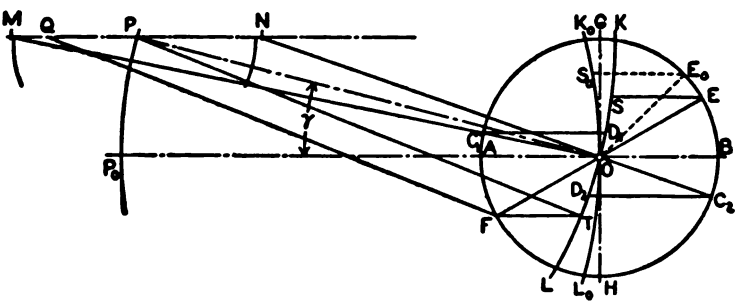

FIG. 362.—Non-central Stroke-line.

treme distances will be unequal, partly because C_2 is farther from AB than is C_1, partly on account of the curvature of the reference-arc KL.

For a very long rod, the curve KL would be replaced by a straight line at right angles to OP, which latter is the line of mean rod-slant.

Approximately—the approximation being less close as the angle is greater and the rod is shorter—Q travels as if it were driven along OP_0 by the eccentric OE_0, located from the actual eccentric OE by making the angle EOE_0 equal to γ: that is, the change in the mean direction of the rod from OP_0 to OP (equivalent to a change in the eccentric-angle) has the greatest influence upon the travel

Digitized by Google

of the slide; and the other effects, such as that due to the
between OP and MN, are secondary.

(*h*) EQUALIZING THE CUT-OFFS.—By combining an offset s
line with the use of a very short rod, the desideratum of u
(angular) periods of port-opening in the two ends, with symm
beginnings, can be secured: which makes possible equal c
with equal laps. Thus in Fig. 363 the valve is supposed t
at the diametrically opposite eccentric-positions OR and
The arcs RS and TU are drawn like K_1L_1, K_2L_2, on Fig. 357,
struck with l as radius from the points G and H on MN. On ac
of the curvature of these port-edge lines, the angle ROS is g
than TOU—in this case about 136° as against 127°, accordi
the protractor-scales on the figure.

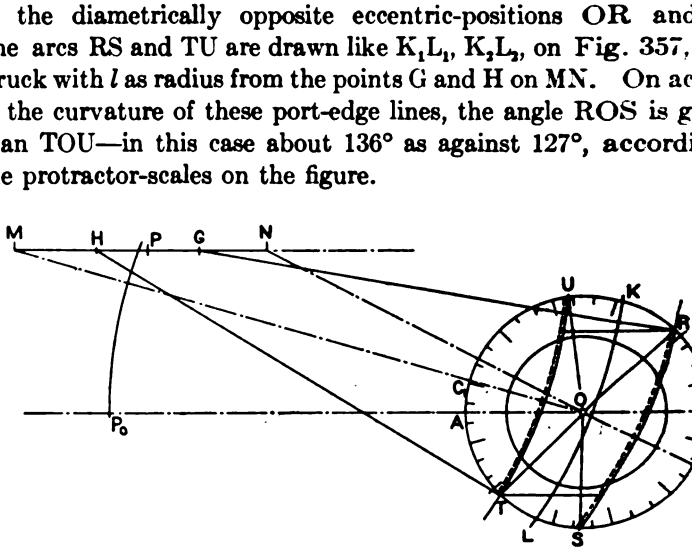

FIG. 363.—Unequal Periods of Opening.

With this very short rod, the non-symmetry of the widt
opening is quite marked: and if the valve be shifted just a
on its seat, as by lengthening the valve-rod, so as to bring
lap-lines to the dotted positions, then the difference betwee
angles of closure will be increased. It will be noted that the ch
in leads here involved is just the opposite of that in Fig. 353.

An application of this device will be found in the valve-
discussed in § 58, under Figs. 495 to 502. That it could
be used with a shifting eccentric is shown by drawing the s
inner circle, and noting the great distortion-effect analogou
that in Fig. 359: and here the short rod is essential, for it is

Digitized by Google

because of the curvature of RS and UT that the arcs UR and ST are unequal.

§ 50. The Stephenson Link-motion.

(*a*) REVERSING THE ENGINE.—The derivation of this most common type of reversing valve-gear is at once suggested by consideration of the eccentric-settings for opposite directions of rotation, shown in Fig. 364. If the two eccentrics are put on

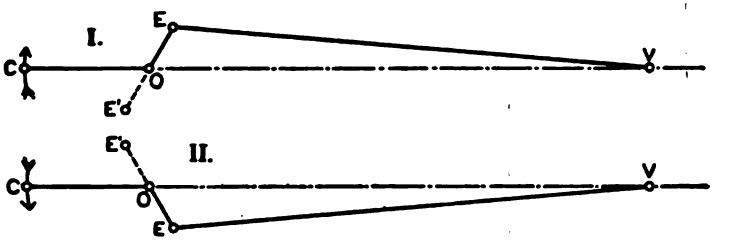

FIG. 364.—Eccentric-settings for both Directions.

the engine-shaft side by side, and if the control of the valve can be transferred from one to the other at will, the engine can be made to run in either direction. Logically the primary type of a device for making this transfer is that shown in Fig. 365, where

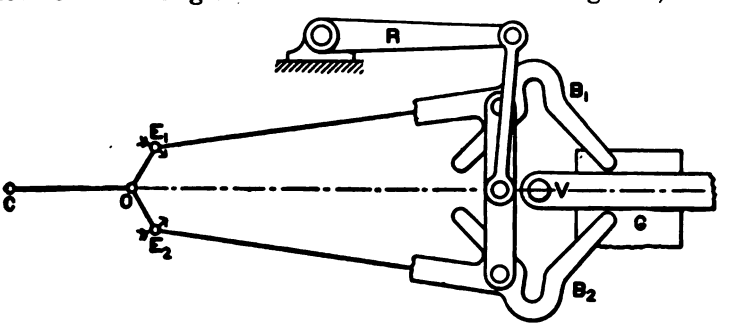

FIG. 365.—The Gab-motion.

by moving the lever R either hook, B_1 or B_2, can be made to engage the pin at V. This crude arrangement preceded the link-motion, and was used on hoisting-engines: it has, of course, been entirely superseded.

Digitized by Google

(*b*) THE STEPHENSON GEAR.—The substitution of the curv link for the "gabs" of Fig. 365 is a radical improvement, not on on account of its mechanical superiority, but because it adds

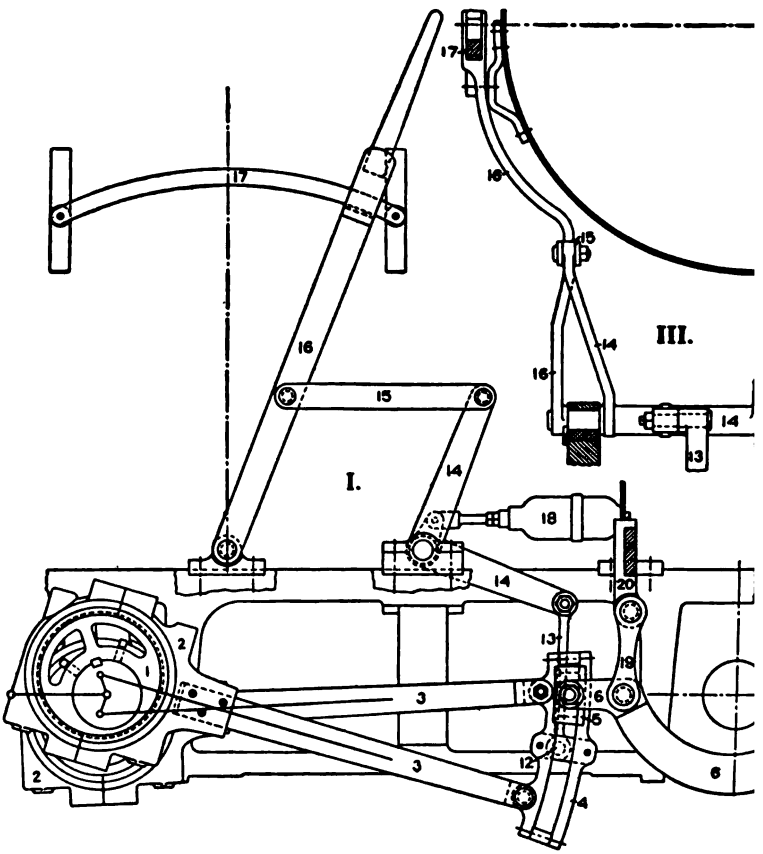

FIG. 366.—A Locomotive Valve-gear.

second very important function to that of merely reversing the engine, in making possible a regulation and variation of the steam-distribution very similar to that effected by the movable eccentric of the shaft-governor.

Examples typical of the two most important applications of the link-motion—in the locomotive and in the marine engine—

Digitized by Google

n in Figs. 366 and 368. In the first, the apparatus is omplicated by reason of the extensive transmission-gear the link and the valve. The several views are disposed th regard to the space available than to their strict rela- the scheme of projection. I. and II. make up the prin-

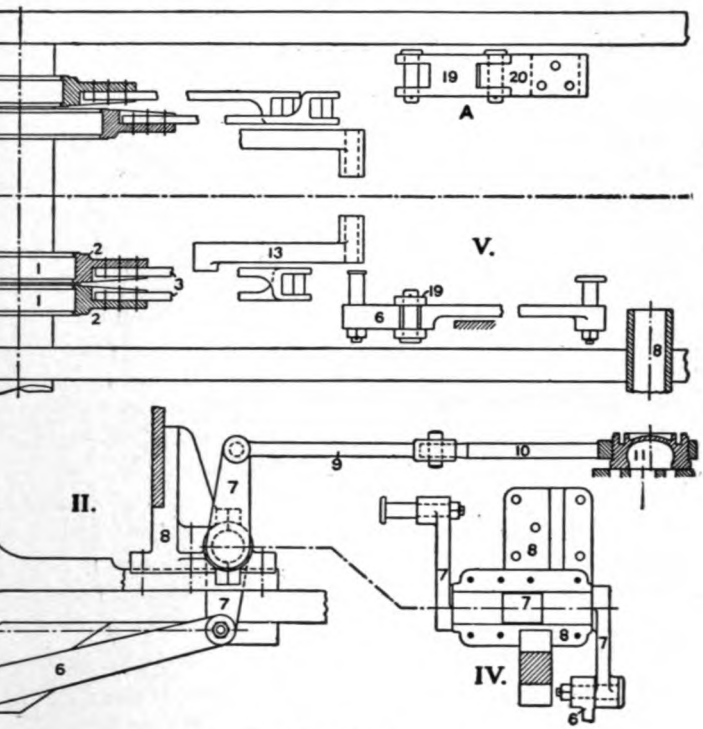

FIG. 366.—*Continued.*

. Eccentric.
. Eccentric-strap.
. Eccentric-rod.
. Link.
. Block.
. Extension-rod.
. Rocker.
. Rocker-box.
. Valve-rod Extension.
. Valve-rod.
11. Valve.
12. Hanger-pin.
13. Suspension-rod.
14. Lifting-shaft.
15. Reach-rod.
16. Reverse-lever.
17. Notched Arc.
18. Balance-spring.
19. Extension-rod Hanger.
20. Bearing for Hanger.

side view; III. shows the controlling or adjusting gear, e front; IV. is a detail view of the rocker, and in V. a

Digitized by Google

number of the parts are laid out in plan, chiefly for the purpos
of showing their relative positions as measured from a vertica

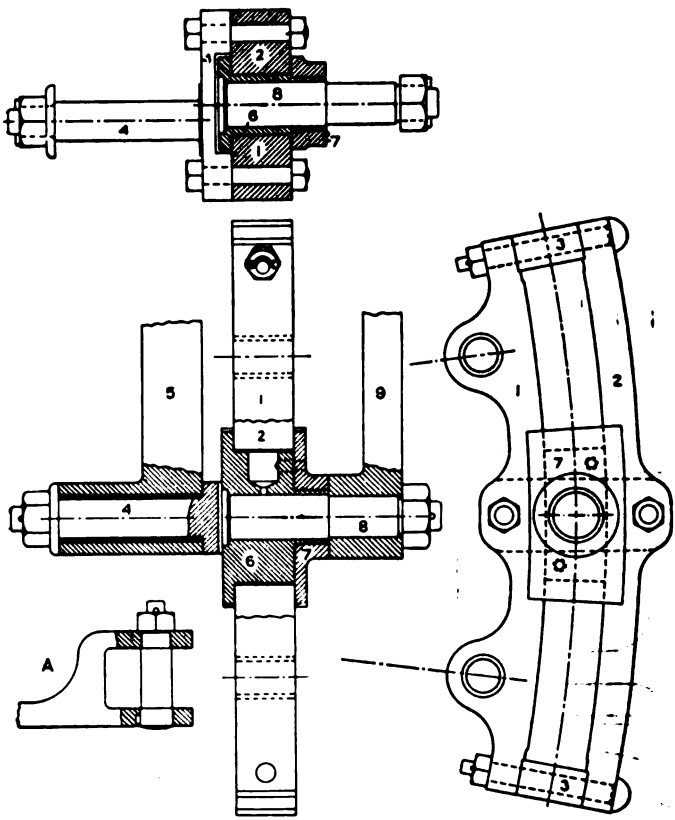

FIG. 367.—The Locomotive Link.

1. Back Half of Link.
2. Front Half of Link.
3. Distance-blocks.
4. Hanger-pin and Saddle.
5. Suspension-rod.
6. Block.
7. Loose Flange of Block.
8. Rocker-pin.
9. Rocker-arm.

center-plane, and how near the mechanism comes to having it
members all in one plane.

The valve-gear as a whole divides itself into several com
ponent parts. The link-motion proper, from the shaft or mai

Digitized by Google

axle to the link 4, including the suspension-rod 13, forms one complete mechanism, with definite motion; the adjusting-gear, pieces 14 to 16, constitutes another division; the valve-connections, comprising everything from the block 5 to the valve, make up a third. The link, shown in detail in Fig. 367, is of the offset type: that is, the pin-connections for the eccentric-rods are set well back of the center-line of the link: whereas in Fig. 368 these pins are on the curved center-line. The radius of the link-arc is equal to the distance from its center-line to the eccentric-center, along the eccentric-rod: in other words, if the centers of both the eccentric-straps could be brought to the center of the shaft, then the center of curvature of the link would also coincide with the shaft-center. The construction of the link and block, and the arrangement of the suspension-pin, are so clearly shown in Fig. 367 as to need no explanation: but in one particular this arrangement differs from Fig. 366, namely, in that here the block drives the lower end of the rocker directly, instead of through an extension-rod.

The reverse-lever system, or the adjusting-gear, controls the power of the engine, by raising and lowering the link so as to change the position of the block in the link, and thereby vary the steam-distribution. By means of a latch on the reverse-lever, engaging notches on the arc 17, the valve-gear can be locked at any setting. In the casing numbered 18 is a compression-spring, which balances the weight of the link-motion, so that the reverse-lever will move easily in either direction.

The general form and the dimensions of the transmission-gear, from the block to the valve, are determined by conditions outside of the valve-mechanism; that is, by the location of the main driving-axle and of the valve-chest. In locomotives of European construction the valve is commonly so placed that it can be directly driven.

The valve-gear of a marine engine is usually of this simpler, direct-driving type: and where, as in Fig. 368, the rod-pins are on the center-line of the link, some small disturbing elements are eliminated from the movement of the valve. The detail of the two-bar link at II. shows how the pins are got into this posi-

Digitized by Google

tion without interfering with the full movement of the blo
while the alignment of the eccentrics with the link and the fork
end of the eccentric-rod are given at III. The reversing-sh

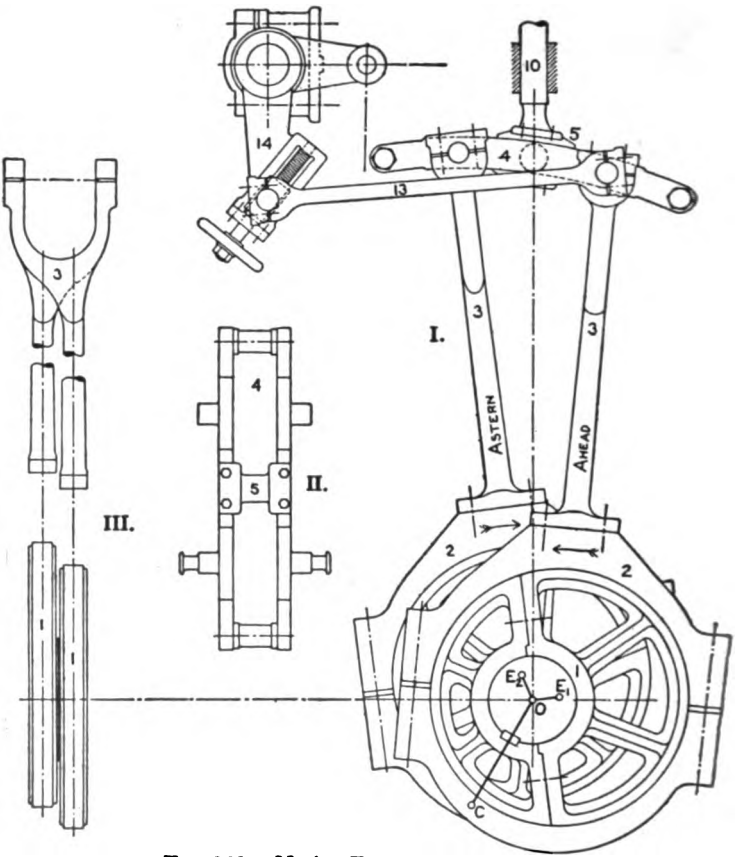

FIG. 368.—Marine Type of Link-motion.

Corresponding parts have same numbers as on Fig. 366.

runs along the front of the engine, and controls all the individua
valve-gears together. By means of the adjustment device, the
location of the suspension-pin on the end of the reverse-arm 14
can be changed, so as to vary the relative actions of the several

Digitized by Google

in the compound engine. The slot in which moves the carrying the pin is at such an angle that adjustment will ts full effect upon forward running, and practically none backward running of the engine. This particular gear s to the low-pressure cylinder of the engine illustrated . 243, 259, and 260; and the eccentrics are made so much in diameter than is apparently necessary because the other irs are mounted on the coupling-flanges of the shaft-sections, l are alike in outer diameter.

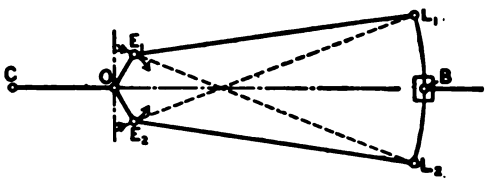

FIG. 369.—The Direct Link-motion.

ARRANGEMENT OF THE RODS.—In Figs. 369 and 370, these ears are drawn in outline, the simpler type first, the loco- type second—both in the locomotive position. The effect reversing rocker-arm, as th in Fig. 341, and further ed by the dotted-line ec- -settings in Fig. 364, is own in the reversed posi- the crank, with reference figure of the eccentrics, 370. These diagrams are ed to make clear the dis- n between the two possible ements of the eccentric- r two ways of connecting centrics to the link—that en "open" and "crossed"

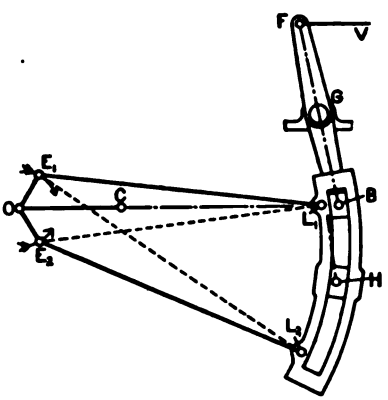

FIG. 370.—The Indirect Link-motion.

During a whole revolution of the shaft, the two rods will t of the time clear of each other, as here, part of the time l. The distinction is made by turning the shaft so that

Digitized by Google

the two eccentric-centers E_1 and E_2 are toward the link, or betw
the link and a vertical center-line through O; and then noti
for this characteristic position, whether the rods are open,
shown by the full lines, or crossed, according to the dotted lines

(*d*) MOVEMENT OF THE VALVE.—Anticipating the demons
tion presently to be given, we will now state the manner of act
of the link-motion, as follows:

For any position of the block in the link, intermediate betw
L_1 and L_2, the motion of the valve is very nearly what would
given by a single eccentric with its center on a curve thro
E_1 and E_2: the location of this center E between E_1 and E_2 be
similar—in the geometrical sense of proportionality—to t
of B between L_1 and L_2. To make this statement fit Fig.
exactly, we should designate as B_1 and B_2 the block-positi
right in line with the two eccentric-rods, and make the prop
tionality apply to the location of B on B_1B_2.

In Fig. 371 the first thing shown, at I., is the manner in wh

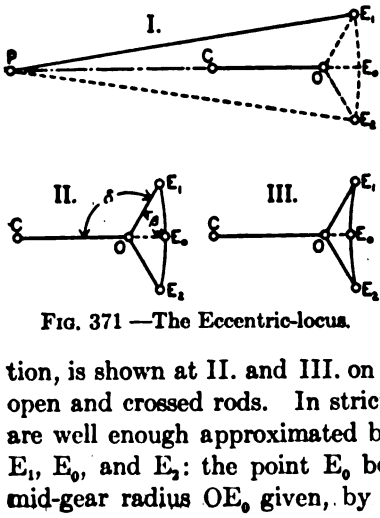

FIG. 371 —The Eccentric-locus.

reversing could be secured
the movement of an actual sin
eccentric-center. Having an
centric-pendulum pivoted at
extend its range of movement p
E_0 to E_2; then the lower half
the locus of E will correspo
with, and will produce, rever
running of the engine.

The locus of the equival
single eccentric, for the link-m
tion, is shown at II. and III. on Fig. 371 for the respective cases
open and crossed rods. In strict accuracy parabolas, these cur
are well enough approximated by circular arcs through the poi
E_1, E_0, and E_2: the point E_0 being located, or the length of t
mid-gear radius OE_0 given, by the formula

$$r_0 = r\left(\cos\beta \pm \frac{k}{l}\sin\beta\right); \quad . \quad . \quad . \quad . \quad . \quad . \quad (31$$

Digitized by Google

r is the actual eccentric-radius, β is the supplement of δ as
. 371 II., k is half the length L_1L_2 of the link, and l is the length
eccentric-rod. The plus sign is for open rods, giving the
locus in II., or increased lead toward mid-gear; the minus
d the concave curve are for crossed rods. Note that the sec-
rm of the formula, $(k/l)r \sin \beta$, is the amount by which
rve departs from the straight line E_1E_2; being the fraction
the half-length of this line.

e "adjustment" of the valve-gear, or the position of the link
he block, is defined as follows:

ien the block is under the full control of either eccentric—
, at L_1 or L_2 in Fig. 369, in line with L_1 or L_2 in Fig. 370—
echanism is said to be at "full-gear," forward or backward.
osition is called mid-gear, as indicated above. Any other
n is described by giving the fraction got by dividing the half-
of the link into the distance of the block from the middle
link: thus we speak of half-gear, three-quarters gear, and

sitions of the reverse-lever latch on its arc will be almost
y similar to those of the block in the link: so that the setting of
lve-gear can be equally well defined in terms of this position.

VALVE AND INDICATOR DIAGRAMS.—A sample set of valve-
ms for a Stephenson gear is given in Fig. 372. The eccentric-
is first laid out at $E_1E_0E_2$ (for
ank at zero), and the locus
is made symmetrical to it,
reference to the line GH.
-circles are drawn, for full-
orward, on OD_1; for full-gear
ard, on OD_2; for mid-gear,
$_0$; and for half-gear forward,
D; OD and OE correspond-
th a position of block in link
ay between L_1 and the
e, according to the definition
iven.

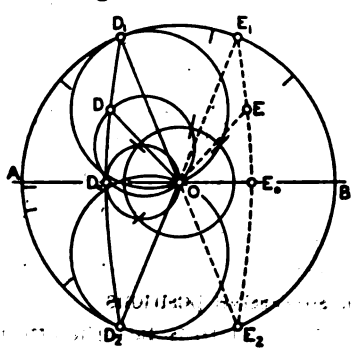

FIG. 372.—Valve-diagrams for the Link-motion.

veral indicator diagrams from a locomotive are reproduced

Digitized by Google

in Fig. 373. The largest, No. 1, shows the greatest amount of wo per revolution that the engine is capable of performing; this wo be done only at very low speeds, and the tractive force, or tangent force at the driving-wheels, due to this steam diagram would so great that it would slip the wheels if friction were not increas by the use of sand on the ra The normal resistance of the tr is represented by the smaller d grams, taken at speeds of 35 to miles per hour. Slight variations boiler-pressure and in the opening the throttle-valve, together with t influence of speed as already illu trated in Fig. 355, account for t differences in the admission pre sure, and render impossible t close determination of a cut-off locus like QQ on Fig. 354.

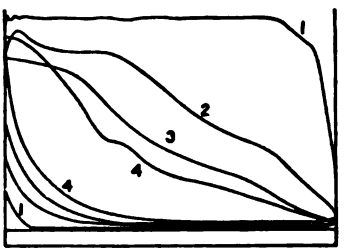

FIG. 373.—Diagrams from a Locomotive.

PROBLEM 11. Given r, s, k, and l, and that the rods are open. Fir set the eccentrics so as to have zero lead in full-gear; then get t eccentric-locus, and draw Zeuner diagrams for full gear both way for mid-gear, and for quarter cut-off forward. Show the steam-di tribution in each case, taking the inside lap to be zero. Good avera data are, $r=2\frac{1}{2}''$, $s=1''$, $k=8''$, $l=50''$.

§ 51. Kinematics of the Link-motion.

(*a*) THE MECHANISM SIMPLIFIED.—The movement of the valv as produced by the link-motion, is the resultant of a number c component actions. The more important of these are compara tively simple, and can readily be brought to general geometrica expression; but some of the smaller, secondary influences can b investigated only by the method of plotting the whole mechanism in successive positions.

In order to isolate the effect of the eccentrics, we shall use the model shown in Fig. 374, where the movement which they give is transmitted to the link without change. The following descrip- tion will make clear the working of this mechanism:

Digitized by Google

The several parts of the framework bear the number 1; the disk 2, turning in a fixed bearing, represents the crank-shaft; the eccentrics are reduced to pins fastened in 2, one projecting to the front, the other behind. These pins work in cross-slots in the slides 3 and 4, after the manner of Fig. 106; and the harmonic motion thus produced is transmitted by the rods 5 and 6 to the slides 7 and 8. These work in guides on the adjusting-slide 9; and it is to be noted that the joints between 3 and 5, 5 and 7, etc., are not

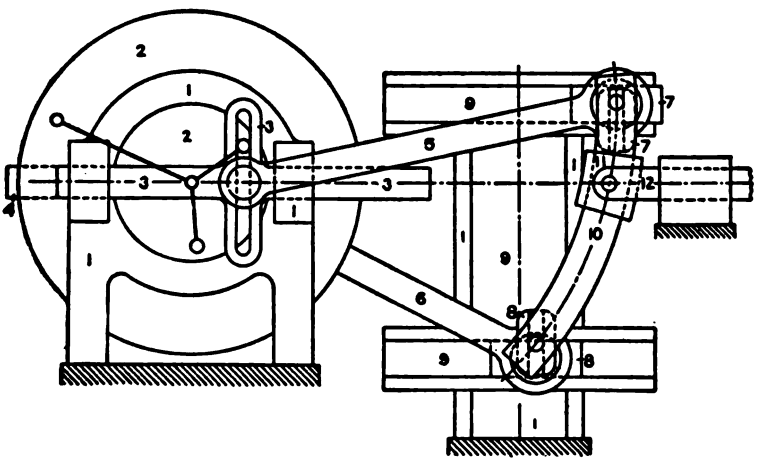

FIG. 374.—Kinematic Model of the Link-motion.

working joints, but turn only when the gear is "adjusted" by moving 9 up or down. Slides 7 and 8 carry vertical slots in which work the rod-pins on the back of the link. The latter is of the simple central type, as in Fig. 368; and is supposed to be supported by clamping the block 11 upon it in the position proper to any setting of 9.

(*b*) HARMONIC MOTION TRANSMITTED.—With the model arranged as in Fig. 374, the ends of the link receive harmonic motion exactly as though they travelled on a stroke-line passing through the center of the shaft. In Fig. 375, the ideal mid-position of the link, from which its movement is to be measured, is found by striking the arc P_1P_2 from O, with the rod-length l as radius. Then the effect of

Digitized by Google

the arrangement under discussion is to make P_1B_1 equal OD_1, a P_2B_2 equal OD_2. Calling these travels t_1 and t_2, the actual tra t or PB is a mean between them, in a proportion determined

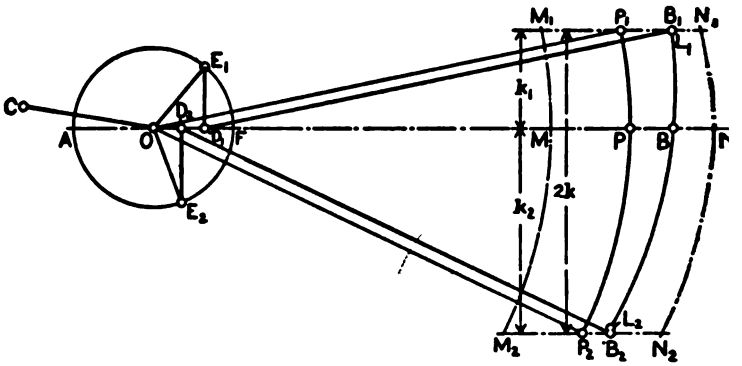

FIG. 375.—Harmonic-motion Component of Valve-travel.

the location of B on L_1L_2: that is, the difference between t_1 and is divided in the same ratio as the link is divided by the block.

Fig. 376 I. shows an enlarged diagram of the eccentrics; and is evident that by locating E on E_1E_2 just as B is located on L_1 we secure the same value of t as on Fig. 375. This brings us at on to the conclusion that the valve-slide, driven by B, will move ju as though it were under the control of the single eccentric OE.

(*c*) CURVATURE OF THE LINK.—In strict accuracy, a true a constant proportionality in the interpolation of t between t_1 and would be secured only with the straight link outlined in Fig. 376 I. where a rigid bar pivoted at B passes through slide-blocks pivot on the ends of the rods and guided along the stroke-lines M_1N M_2N_2: and it may be remarked that a curved link made on th principle might give a smaller error than does that actually us on Figs. 374 and 375. But the straight link would have the radic fault that the point P, the center of movement, would change i position as the link was moved up and down.

It appears then that only by using for the center-line of the lin an arc which has the length l as radius can the stroke-line M Fig. 375, be kept at a constant position as the valve-gear is a

Digitized by Google

justed. The limit-curves M_1M_2, N_1N_2, are, of course, arcs struck from A and F with the radius l.

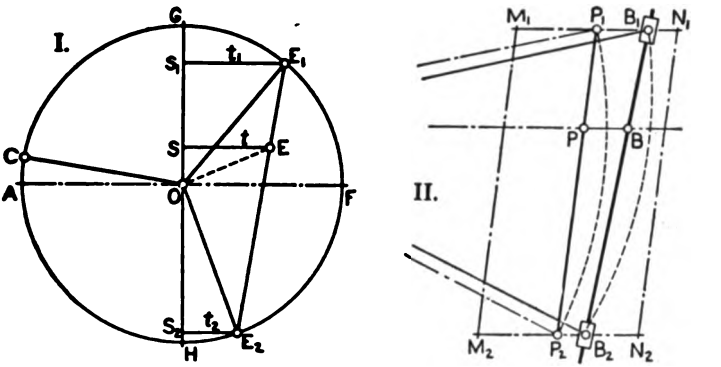

FIG. 376.—The Equivalent Eccentric: The Straight Link.

As regards the effect of this curvature upon valve-movement, we note that the angle between the two chords BL_1, BL_2 on Fig. 375 will modify slightly the paths of the pins L_1 and L_2 in an actual gear, and will also have a small influence upon the relation of t to t_1 and t_2: but with actual proportions, instead of the very short

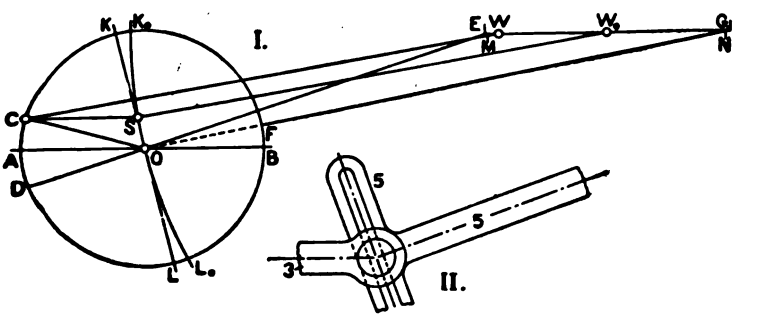

FIG. 377.—Non-central Stroke-line in the Link-motion.

rods used in these illustrative figures, both these effects will be very small.

(*d*) INCLINATION OF THE ECCENTRIC-RODS.—The next step is to take into account the fact that the link-pins, as actually driven

Digitized by Google

by the rods, travel on stroke-lines which do not pass thro the shaft-center. This condition is shown by the diagram a in Fig. 377, which is similar to Fig. 362. Here M and N are same points as M_1 and N_1 on Fig. 375, the dead-center positi being at E and G. Continuing to neglect the effect of the angu swing of the eccentric-rod, we get that of its mean slant by cha ing a part of the model, Fig. 374, to the form shown at Fig. 377 where the slot for the eccentric-pin is carried by the rod 5, sc always to be at right-angles to the center-line of this rod—the of the rod being guided along a horizontal line by the slide-bar 3

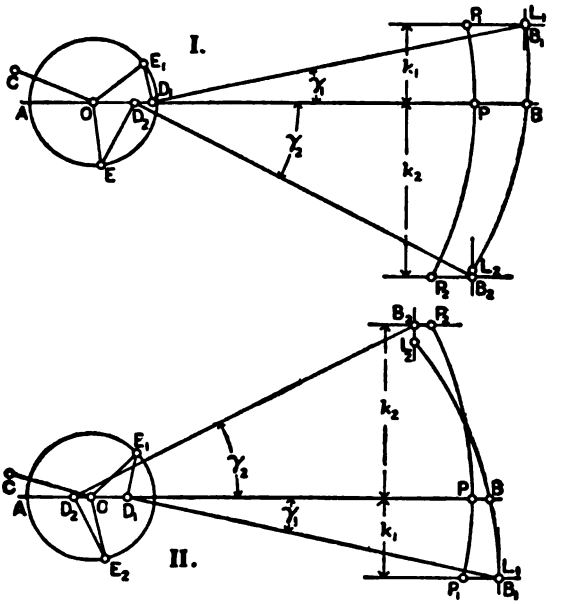

FIG. 378.—Effect of Rod-inclination.

Diagrams for this motion, similar to Fig. 375, are given Fig. 378, I. for open rods, II. for crossed rods. The ED-li are now perpendicular to the rod-lines DB instead of the strol line AP: and with the exaggerated proportions here used, t valve-travel is very materially modified by this change. important difference between the two rod-arrangements n

Digitized by Google

becomes apparent, in that the travel is increased with open rods, decreased with crossed rods, from that in Fig. 375: and this relation is general, holding true all the way round the circle.

Fig. 379 gives enlarged eccentric diagrams for the two cases, analogous to Fig. 376 I. The reference-lines K_1L_1, K_2L_2, are drawn at right-angles to the mean rod-line, like KL on Fig. 377. In each case, comparing with Fig. 378, $E_1S_1 = OD_1 = P_1B_1$, $E_2S_2 = OD_2 = P_2B_2$; and E divides E_1E_2 in the same ratio that B does L_1L_2. Then joining S_1S_2 and drawing ES, we have in ES a proportional between E_1S_1 and E_2S_2, just as PB is a proportional

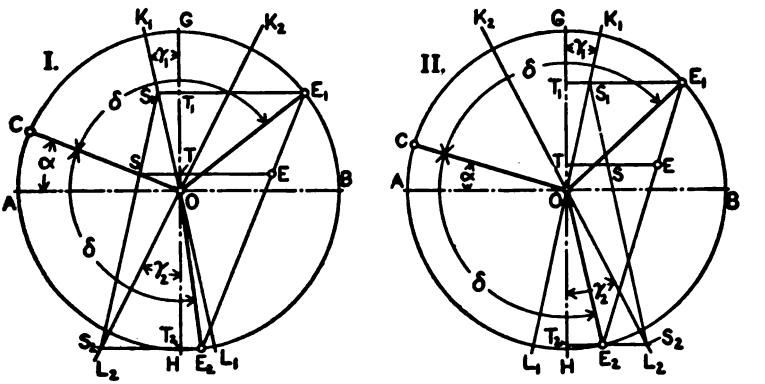

FIG. 379.—Eccentric Diagrams.

between P_1B_1 and P_2B_2. It will be noted that each ES-line is made up of two parts; the portion ET corresponds to harmonic motion, while TS shows the effect of the slant of the rods.

(*e*) DETERMINATION OF EFFECT OF ROD-SLANT.—As the first step in the development of a general graphical expression for the travel-component TS, we must find a simple way of representing the movement of the slide in the case of Figs. 362 and 377, carrying out to a definite conclusion the approximation suggested at OE_0 in Fig. 362. This is done in Fig. 380, where OE is the actual eccentric, OW_0 the line of mean rod-slant, and KL the reference-line in the common circular diagram. First, put the eccentric on its dead-center line OW_0 at OE_1 (referring to Figs. 362 or 377, we see that this will be the line of both dead-

Digitized by Google

centers if swing of the rod is disregarded): then the travel S is the same as would be produced by a radius OF_1, got by draw E_1F_1 perpendicular to OE_1, a driving a slide along the line C This suggests the relationship emplified at OEF, where the an EOF is, of course, equal to γ: a we must now prove that, in gene TF is equal to SE.

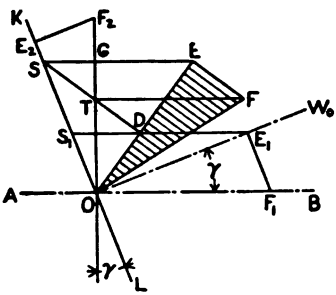

FIG. 380.—Equivalent Eccentric with Non-central Stroke-line.

Geometrically, draw SD and perpendicular to OE (that D f on S_1E_1 is a mere coincidence), a FT parallel to SE from the inters tion T, to cut off the length E then to show that EF is constant and EOF equal to γ, note t the triangles STG, OEG are similar, having respective sides right angles; then

$$ST : OE :: SG : OG;$$

and EF = ST by construction; wherefore

$$\frac{EF}{OE} = \frac{SG}{OG} = \tan \gamma.$$

In this demonstration, we really derive an equivalent eccent which makes TF = SE. Using trigonometrical relations, we cou prove the equality directly for the relation assumed above; b it is aside from present purposes to multiply proofs.

(*f*) COMBINED EFFECT OF THE TWO RODS.—In Fig. 381, v make E_1F_1 equal $r \tan \gamma_1$, E_2F_2 equal $r \tan \gamma_2$, taking the angl as on Fig. 379: then these extra eccentric-components are pr jected upon the horizontal travel-lines E_1T_1, E_2T_2, giving t extra-travel E_1D_1, E_2D_2, at the respective ends of the link; the distances being necessarily the same as T_1S_1, T_2S_2 on Fig. 37 Next we join D_1D_2, and cut off the length $DS = t$ from the hor zontal through E: and we see that the eccentric OF, of which S is the horizontal projection, is the resultant of OE and of th extra component EF; which last, as must now be shown, is parall

Digitized by Google

to the crank CO and a proportional between E_1F_1 and E_2F_2 determined by the ratio of E_1E to EE_2.

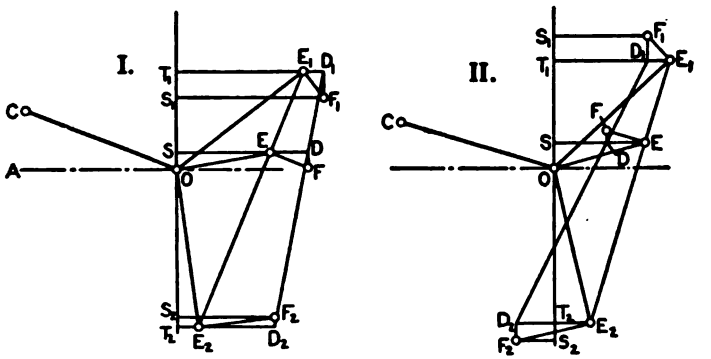

FIG. 381.—Rod-effect by Equivalent Eccentrics.

Just as the resultant of OE_1 and OE_2 is OE, drawn from the origin O to a proportional point E on the line E_1E_2, so also can the resultant-effect EF of E_1F_1 and E_2F_2 be found by a graphical combination. This is worked out in Fig. 382, where the rod-

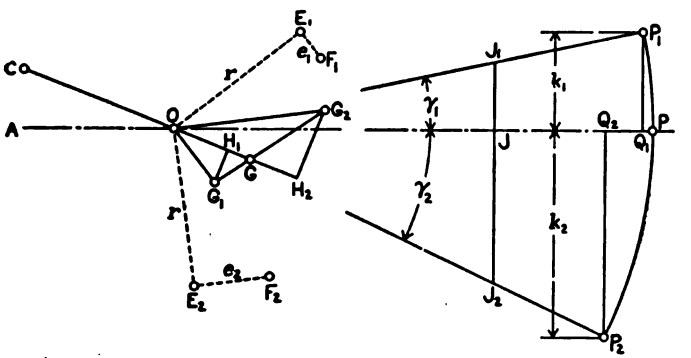

FIG. 382.—Combination of the Rod-effects.

effect components e_1 and e_2 are transferred to the center O (being there doubled in length so as to make a figure of better size). The lengths of e_1 and e_2 can be most conveniently got by drawing the outline of the link-motion in its ideal mid-position, at OP_1P_2,

Digitized by Google

then measuring off $OJ = r$ and drawing the vertical J_1J_2: evide
$JJ_1 = r \tan \gamma_1$, $JJ_2 = r \tan \gamma_2$. Here OJ is r to the enlarged s
so that OG_1 and OG_2 are given directly by JJ_1 and JJ_2. T
two lines are, of course, perpendicular to their respective eccer
radii, OE_1 and OE_2; therefore each makes with the crank
an angle equal to the angle of advance of the eccentric to v
it belongs.

Now join G_1G_2 and let the crank-line intersect it at G:
since OG bisects the angle G_1OG_2, it divides the base G_1G_2 o
triangle into segments proportional to the sides. This m
that G is located on G_1G_2 just as J is on J_1J_2, and very n
as P on P_1P_2 or E on E_1E_2; wherefore the projection of OG
the horizontal stroke-line will be a mean between those of
and OG_2 according to the ratio of PP_1 to PP_2, just as ED
intermediate between E_1D_1 and E_2D_2 on Fig. 351.

(*g*) EXPRESSION FOR THE COMBINED ROD-EFFECT.—One app
mation is included in the statement just made, that of assumi

$$PP_1 : PP_2 = JJ_1 : JJ_2.$$

To get a formula for the length OG, we avoid excessive comple
only by the further approximation of taking k_1/l for $\tan \gamma_1$,
for $\tan \gamma_2$, or of letting

$$e_1 = \frac{k_1}{l} r, \qquad e_2 = \frac{k_2}{l} r.$$

Then since $G_1OG = GOG_2 = (90 - \beta)$ (see Fig. 371), we have

$$OH_1 = k_1 \frac{r}{l} \sin \beta, \qquad OH_2 = k_2 \frac{r}{l} \sin \beta,$$

$$H_1H_2 = (k_2 - k_1) \frac{r}{l} \sin \beta.$$

To simplify, let n be the "fraction of gear" as in § 50 (*d*), or
ratio which the distance of P from the middle of the link b
to the half-length k, Fig. 375: then $k_1 = (1-n)k$, $k_2 = (1+n)k$.

Now H_1G is the fraction $\frac{k_1}{2k}$ or $\frac{1-n}{2}$ of H_1H_2: and for OG
we have

Digitized by Google

$$e = OH_1 + H_1G = \left(1 - n + \frac{1-n}{2} \times 2n\right) \frac{k}{l} r \sin \beta$$

$$= (1 - n^2) \frac{k}{l} r \sin \beta. \quad \ldots \ldots \ldots \ldots \quad (314)$$

For mid-gear, or $n = 0$, this is identical with the second term of Eq. (313); and from the form of the variable factor $(1 - n^2)$, we see that the E-curve, where e is laid out on a base proportional to n, is a parabola.

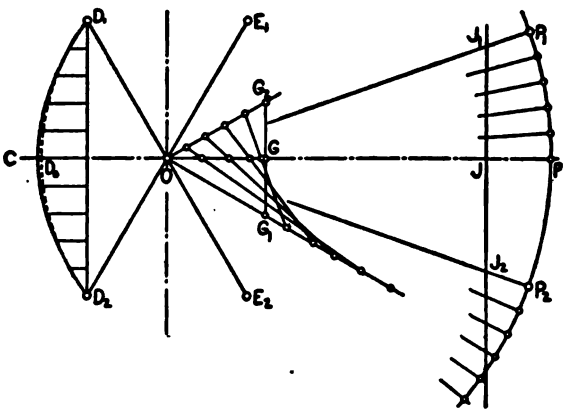

FIG. 383.—Construction of the Locus of E.

In Fig. 383 the construction for G, from Fig. 382, is made for a number of positions, and the results plotted. The crank is put on dead-center, which places the OG-lines in the most favorable position. Only half the curve, from mid-point to one extreme, need be determined, as the halves are symmetrical: the figure as drawn is not quite consistent, since constructed values of OG_1 and OG_2 are interchanged in laying them out; but this does not affect the results. OG is found as of double size, then reduced and laid off from D_1D_2, this line being used instead of E_1E_2 merely to avoid overlapping. Finally, OE_0 or OD_0 is got by Eq. (313) and the circular-arc locus drawn in dotted line. The difference between the curves is a measure of the effect of assuming $k/l =$

Digitized by Google

tan γ; and it appears that even here this causes a very small e which would disappear with practical proportions.

This completes our study of the principal movement of the l driven slide. Taking up next the secondary actions, we cons first the effect of the angular swing of the rods about their line mean slant, then the irregular movements at the link, especi slip of the block in the link.

(*h*) OSCILLATION OF THE RODS.—The effect of this elemen disturbance can be closely enough determined by the metho Fig. 357, applied through Fig. 377, disregarding the fact that rod-pins in the link do not really travel in straight-line paths par to the stroke-line of the valve. An example is worked out in 384, where the proportions used are

$$\frac{l}{r}=10, \text{ as against a usual value of 20 or more;}$$

$$\frac{k}{r}=2.8, \text{ the range of practice being from 2.5 to 3.5.}$$

Assuming that the leads are made equal in full gear, we pass the KL, with l as radius, through points found by projecting the ze positions of E_1 and E_2 over to the vertical center-line. With one eccentric in full control, this curve gives a complete soluti of the problem, for full gear. The more general case is represent by half-gear forward, for which are derived and plotted the resu shown at II.

The curves K_1L_1, K_2L_2, are drawn from centers on the lin OP_1, OP_2. Angle-scales for E_1 and E_2 are laid out, the first nu bered outside the circle, the second inside: by connecting poin with the same number, we should get successive positions of t eccentric-span E_1E_2. For each position, the horizontal distan between the particular KL-curve and its straight line is measur for both eccentrics; and a mean between the two in proper pr portion—here one-fourth of the way from the first to the second- is laid off from the end of the Zeuner ordinate at II., with due regar to direction, each resulting point being marked by a small circl The latter figure is made double-size, to show up better.

Digitized by Google

(i) THE CHARACTERISTIC EFFECT of this action is well brought out by this example. Just as in full gear, though not quite to the same degree, eccentric-displacement toward the right gives the larger port-opening, and should therefore control admission to the head end. Keeping in mind the change in the characteristic position of the mechanism, this conforms to the statements in § 49 (*a*). Further, valve-movement is no longer symmetrical with-respect to the diameter OD, but there is later cut-off when the ec-

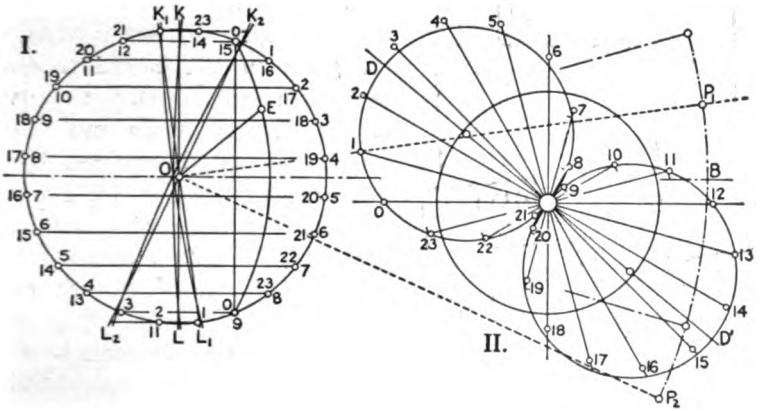

FIG. 384.—Diagrams of Rod-effect.

centric is to the right than to the left. Then with a direct valve directly driven, or with an indirect valve and reversing-rocker, the rod-effect will tend to equalize cut-offs. With the usual arrangement in American practice, however, this effect increases the non-symmetry of the steam-distribution: but when the rods are made long enough to keep the locus of E reasonably near the straight line E_1E_2, the effect of rod-swing becomes very small.

The same method could be used for any other E-point: and inspection of the figure will show that no great error would result from using the full-gear curve KL instead of the true reference-arcs in any case. Then we have only to study the effect of rotating the line E_1E_2 about O, giving proper relative weights to the disturbances determined by drawing horizontals from its two ends across the curve KL and the vertical center-line.

Digitized by Google

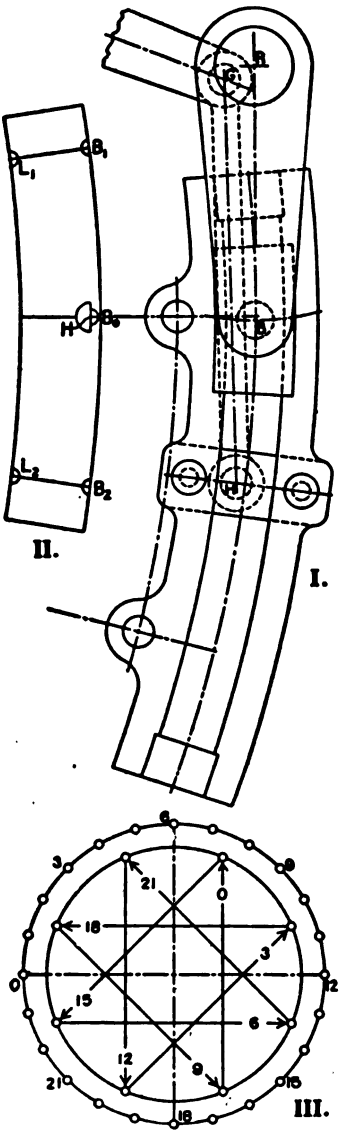

FIG. 385.—The Link and the Eccentric Diagram.

At mid-gear, the disturbanc due to the rods will be aga symmetrical with respect to t OD-line, as at full-gear: but righ hand travels will be lengthene those toward the left shortened.

(*j*) EFFECTS OF SLIP AND OF SET.—It is not practicable to fast the block in the link, in the po tion belonging to each setting the gear: in the locomotive a rangement, the block-pin mov on a circular arc, at the end of t rocker-arm, or determined by hanger-link as in Fig. 366; whe the gear is direct-driving, this p is either guided in a straight lir by a slide, or in an arc of lon radius by guiding-rods. Whatev the arrangement, its path is ge erally not that of a point on th link; and the resulting slip block in link will have the effect varying, within the revolution, th center of the equivalent sing eccentric that drives the valv Further, with the form of lin shown in Fig. 367, and used almos without exception in America locomotives, the fact that the rod pins are offset from the center-lin introduces another complicatio into the movement, as the lin swings away from its normal in clination. This whole action ca be best illustrated and explaine by means of an example.

Digitized by Google

The link, Fig. 385 I., belongs to a valve-gear having the same proportions as that in Fig. 384, except that the rods are twice

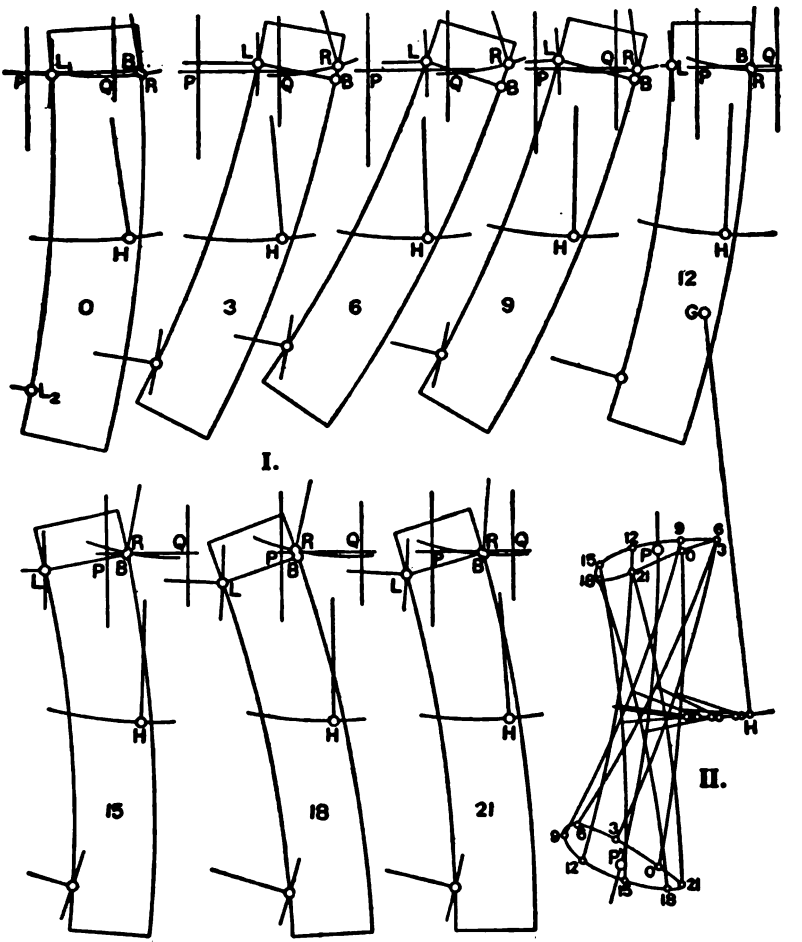

FIG. 386.—Link-positions.

as long, making $l/r=20$, and the link-curvature is correspondingly less: in all its proportions, this example represents average practice very fairly. The link is drawn in its ideal mid-position for full-

Digitized by Google

gear forward, all the arcs being struck from the center of the s
(the main axle).

Fig. 385 II. shows a template, to be made of stiff paper or
sheet-metal, carrying all essential proportions and dimension
the link, and used in drawing the diagrams in Fig. 386. L_1 an
are the link-pin centers, L_1L_2 the link-arc through them, with
rod-length l as radius; B_1B_2 is the center-line of the slot, st
from the same center as L_1L_2, hence with a longer radius.
points B_1, B_2, are determined by radial lines through L_1 and
they are the ideal driving-points for the respective full-gear
tings. The hanger-pin is usually set a little back of the ce
of the slot, and is here on the straight line through B_1 and B_2.

In Fig. 385 III. are given the eccentric-positions for wh
the diagrams in Fig. 386 are drawn: vertical, horizontal, and n
quadrant positions of the line E_1E_2 are taken as representat
and the numbering corresponds with that in Fig. 384. The met
employed in laying out Fig. 386 is as follows:

For any particular crank-angle, as 6, arcs are struck fr
the respective eccentric-centers, giving loci of L_1 and L_2; from
suspension-pin G, with GH as radius, is drawn another arc on wh
H must lie; and by trial the position of the template is found t
will place the three points L_1, L_2, and H, each on its proper cur
Then an arc from the rocker-center locates the block-pin, at
and the distance RB shows the slip of the block, from its norm
position B. In each figure, the vertical through P is the referen
line for the movement of L; while Q, at the distance LB from
fixes the similar center-line for B.

We note at once that the slip is least when the line E_1E_2 is ver
cal, at 0 and 12, greatest when this line is horizontal, at 6 and
or when the link makes the greatest angle with its mid-positio
and that inclination of the link, by inclining the line LB from t
horizontal, makes the distance B-Q differ from L-P; (by B-Q a
L-P, and by R-Q, we mean the horizontal distances from B, L,
R to the reference-line designated by [illegible]). Around 6, the s
more than compensates for the short[illegible] B-L, and [illegible]akes t
travel-distance R-Q greater than L-[illegible] 18 t[illegible]er s
combines with the slant-effect, so as [illegible]crea[illegible]re

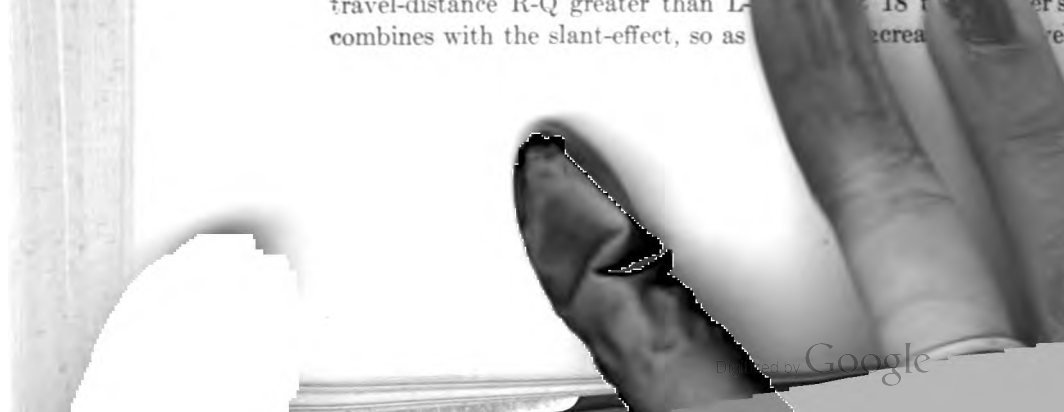

Digitized by Google

(*k*) LOCATION OF THE HANGER-PIN.—From examination of Fig. 386 we see that, in the matter of slip and its effect, a great deal depends upon the location of H on the link. Since the travel is nearly the same at 0 and 9 and at 12 and 21, cut-off will occur at about 9 and 21 in full gear. In this example—direct valve with rocker—crank-end admission takes place from 0 to 9, head-end from 12 to 21. To equalize cut-offs, therefore, a certain value of R-Q should be reached sooner near 9 than near 21: and the fact that R-Q, decreasing, has reached a smaller value at 9 than at 21 shows a tendency thus to equalize. Putting H forward, upon the slot-curve B_1B_2, would increase the inequality; moving it back toward L_1L_2 would at first equalize the travels, then reverse the inequality, because the slip has so much the greater effect at 9.

A complete investigation of the effect of slip and offset, for different gear-settings, would be quite an extensive operation. Having illustrated the method to be used, we shall not go any farther into this very special problem: but it may be well to remark that the location actually used for H is about as here given.

The movement of the link is shown by grouping together at II., in Fig. 386, all the positions of the arc L_1L_2: and it appears that the position of the link-template could be found, accurately enough for all practical purposes, by taking the pin-travels for L_1 and L_2 from a diagram like Fig. 384 I. with straight reference-lines, and laying them off horizontally from the mid-position locus PP′. Short straight lines, parallel to the nearest part of this arc, would replace the true loci of L_1 and L_2 as drawn in I., and would save the trouble of repeatedly using the long radius *l*.

In the marine-engine gear, Fig. 368, the hanger-pin is in line with the forward-running rod-pin, and there will be little slip when the forward eccentric has predominant control: the idea being, to favor the more usual condition of operation, at the expense of that which exists only occasionally.

(*l*) AS THE RESULT OF THIS DISCUSSION of the secondary disturbing actions, under Figs. 384 to 386, we may conclude that, with usual proportions, departures from the harmonic motion due to the equivalent single eccentric will be relatively small. For most purposes, the simple valve-diagram, as in Fig. 372, gives

Digitized by Google

sufficiently accurate results. But it is well to have an idea the character of the modifying actions, and to be able to dete mine their effects with the minimum of work. Of course, tl ultimate determination is that made by actually plotting tl mechanism, as in Fig. 386 I.

(*m*) NON-SYMMETRICAL ECCENTRICS IN THE STEPHENSON GEA —In order to cover the link-motion completely, we must consid also this more general type of arrangement. The simplest cas and one frequently applied in practice, is represented by Fig. 28 where the eccentric-radii are of the same length but the angl δ_1, δ_2, are unequal. Reviewing the derivation of the eccentri locus and considering Figs. 376, 379, and especially 381 and 38 it is not hard to see that the point E_0, the equivalent center whe the block is at mid-link, is really determined by the bisector o the angle E_1OE_2. In the usual arrangement, this bisector coin cides with the crank-line; in Fig. 387 it makes a small angle wit the crank; but after it has been determined, the E-curve is t be used, and any particular center located, just as in Fig. 371 The essential point of this argument is, that the triangle E_1OE_2 is the important determinant at the shaft, the position of the crank relative to this triangle having no effect upon the absolute movement of the valve, but affecting only its movement with reference to the crank and the piston.

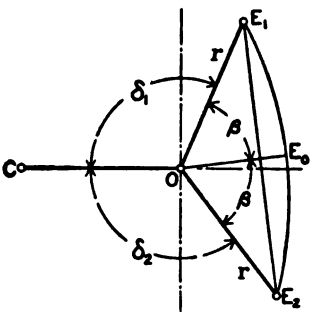

FIG. 387.—Equal Eccentrics at Unequal Angles.

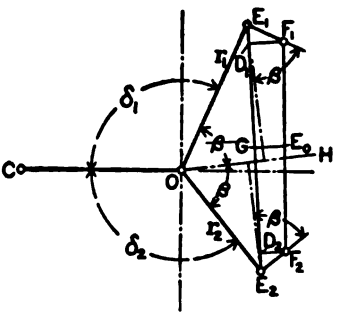

FIG. 388.—Both Radii and Angles Unequal.

The most general case, in Fig. 388, has the eccentric-radii unequal as well as the angles. Under the conditions of Fig. 376,

Digitized by Google

nid-gear point G on the straight locus would bisect the length ; and the corresponding rod-slant effect GE_0 is a mean een E_1F_1 and E_2F_2, or between D_1F_1 and D_2F_2. Using or tan γ, as under Fig. 382, we have

$$E_1F_1=\frac{k}{l}r_1, \qquad E_2F_2=\frac{k}{l}r_2.$$

her, disregarding the error due to the fact that OG no longer bisects E_1OE_2, we get GE_0 nearly enough by taking

$$GE_0=\frac{D_1F_1+D_2F_2}{2}=\frac{k}{l}\frac{r_1+r_2}{2}\sin\beta. \quad . \quad . \quad . \quad (315)$$

ractically, then, we have only to join E_1 and E_2 by a straight measure off perpendicularly from the middle of it the dis- given by (315) to get E_0, and draw an arc through these points.

nother departure from symmetry of arrangement is seen in 454, where the stroke-line of the block-pin—as most nearly sented by a horizontal straight line—does not pass through centre of the axle. This condition of affairs is quite often d in locomotives, both in the valve-gear and in the main e-mechanism; but the amount of offset is small compared the rod-lengths. It can be taken into account by the methods g. 380, which will slightly change the points E_1 and E_2 of E-locus from the actual centers. Practically equivalent is assumption that the stroke-line passes through the shaft- r but is no longer horizontal; then the method of Fig. 342 e used in drawing the valve diagrams.

n) Other Link-motions.—Two variations upon the Stephen- ear are outlined in Fig. 389, both drawn in the characteristic ion for the stationary engine, in order to bring out the funda- al relations in that case—although the gears have been used ly on locomotives. In the Gooch mechanism, at I., the link pt in a constant suspension, and the driving-rod VB shifts: makes necessary a reversal of the curvature of the link. In llen gear, both link and rod are moved, by a double suspension-

Digitized by Google

lever: the link is straight, so that the center of travel for block varies; but this is compensated by the effect of chang the slant of the rod VB, with the result that V has a practica constant mid-position. The proper proportioning of the t

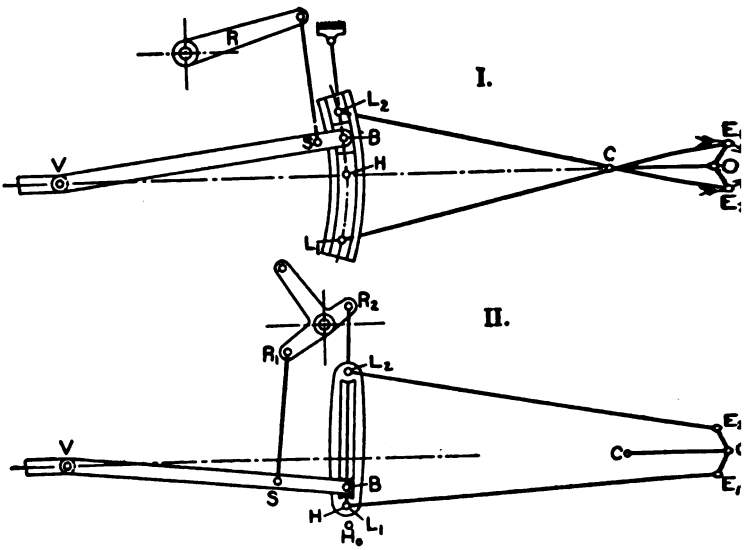

FIG. 389.—Gooch and Allen Link-motions.

suspension-arms is an important point in the design of this valv gear.

The rod VB, in either case, remains at a practically consta inclination as the shaft rotates; and transmits horizontal motic without change, as do the eccentric-rods in Fig. 374.

It will be noted that, for the engine-position here used an with open rods, the forward eccentric (the one for right-han rotation) is connected to the lower end of the link: so that th rods are crossed when the crank is on the head-end dead-cente The general rule stated in § 50 (*c*) applies equally well to this case however, as appears from Fig. 389 II.

(*o*) ANALYSIS OF THE GOOCH GEAR.—Here the link has alway the movement which an equivalent Stephenson link would hav

Digitized by Google

in mid-gear. Laying out the two actual eccentrics at OE_1 and OE_2 in Fig. 390 I., we find the equivalent eccentrics driving the ends of the links after the manner of Fig. 380, by measuring off

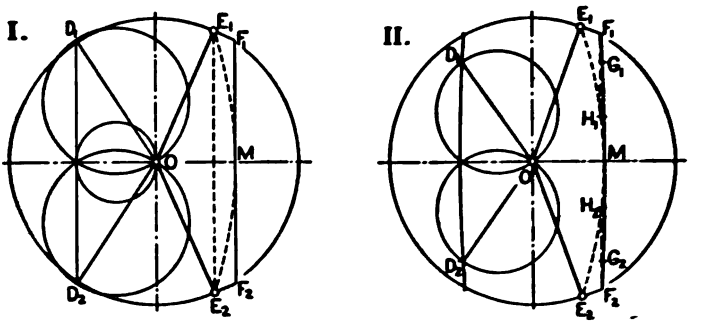

FIG. 390.—Eccentric Diagrams for Gooch and Allen Gears.

EF equal to $r \tan \gamma$ or to $k/l \times r$: or we may draw the Stephenson curve E_1ME_2 and the line F_1F_2 tangent to it, determining the length of E_1F_1 and E_2F_2. Then the horizontal movement of any point on the link will be the same as that of a similarly located point on the line F_1F_2. The full-gear valve-circles are drawn on OD_1 and OD_2, symmetrical with OF_1 and OF_2.

That the lead will be constant with this mechanism can also be seen, very simply, by the fact that V will not move as the block is moved up and down in the link, when the latter is at the dead-center position, as in Fig. 389 I.

(*p*) ANALYSIS OF THE ALLEN GEAR.—In determining the locus of the equivalent single eccentric for this case, we use the methods of Figs. 381 to 383: worked out exactly, it would be more complex than for the Stephenson gear, because the driving-point for the block is off the stroke-line OV. But as a sufficient approximation, we find the extra eccentric-effect due to the mean slant of the controlling eccentric-rod, when the link is at the full-gear position as in Fig. 389 II., and lay this off at E_1F_1 and E_2F_2. With the mid-gear radius OM, found by the usual formula, we have three points through which to pass an arc: and the usual rule

Digitized by Google

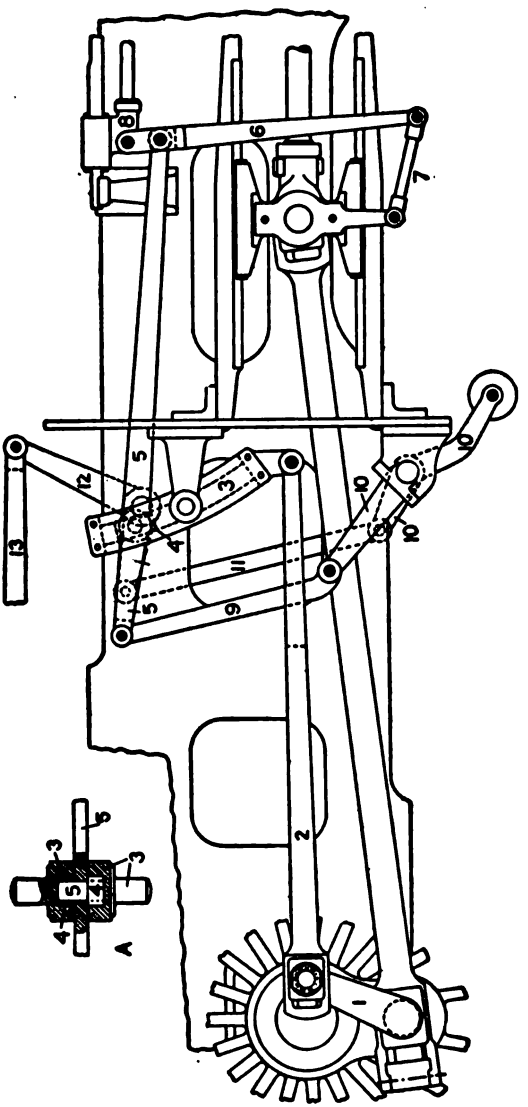

FIG. 391.—Walschaert Valve-gear on a Locomotive.
A. Enlarged Section of Link and Block.

1. Return-crank, carrying Eccentric-pin.
2. Eccentric-rod.
3. Oscillating Link.
4. Block.
5. Driving-rod.
6. Floating Lever.
7. Connecting-link.
8. Valve-slide.
9. Suspension-rod.
10-13. Adjusting-gear.

Digitized by Google

of proportionality to block-position is followed in locating the E-point on F_1F_2.

In the example shown, we have what may be called a "partial-gear" link, because the block cannot move all the way out to the full-gear position. The effect is to limit the eccentric locus at G_1 and G_2; and it is for these realized extreme positions that the valve-circles are drawn in Fig. 390 II.

§ 52. The Radial Valve-gears.

(*a*) UNDER THIS TITLE are comprised a number of mechanisms which give practically harmonic motion to the valve and vary the steam-distribution in the same general manner as the shifting-eccentric or the link-motion. They usually employ only one eccentric, in a valve-gear that can reverse the engine; and in one case, in the Joy gear, there is no eccentric at all in the ordinary sense. The two gears most extensively used, the Walschaert and the Joy, will now be described and discussed; and will serve as typical examples, illustrating the working principles of the whole class.

(*b*) THE WALSCHAERT VALVE-GEAR.—This is very generally used on locomotives on the Continent of Europe, though not occupying the predominant position that the Stephenson gear has in American and English practice. A good example is shown in Fig. 391, taken from a German locomotive. We shall refer to this drawing later: but as the basis of an investigation into the movement of the valve, will use the skeleton outline in Fig. 392: here the figure is shortened up somewhat, and the suspension-rig is rather more symmetrically arranged.

The movement given to the valve-slide 8 is the resultant of two components: the first is derived from the eccentric E through the oscillating link 3, and varies in amount as B is moved out from P, and in direction relative to the crank as B is above or below P; the second component is derived from the cross-head through the lever 6. The resultant effect is equivalent to the motion that would be given by a single eccentric, shifting along

Digitized by Google

a straight-line locus, like E_1E_2 in Fig. 376, as B is shifted al the link.

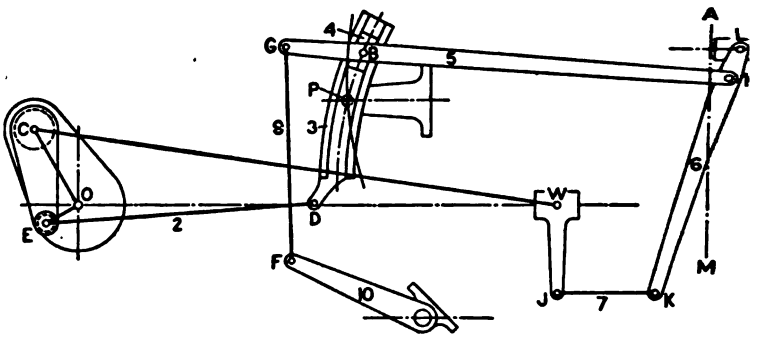

FIG. 392.—Outline of Walschaert Gear.

(*c*) THE GEOMETRICAL RELATIONS in this valve-gear are illu trated in Fig. 393. In I., B_0D_0 is the mid-position of the lin for crank on dead-center, while BD is the same as in Fig. 39 the displacement BB_0 is to DD_0 in the ratio of BP to DP, ar

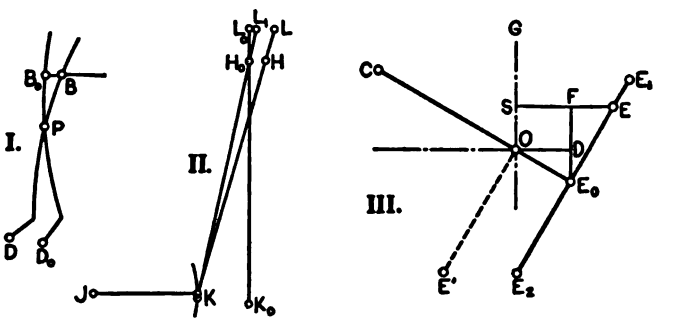

FIG. 393.—Derivation of Equivalent Eccentric.

is here in the opposite direction. In II., L_0K_0 shows the lever in mid-position; and L_1K shows the position it would take if pivoted at H_0 as a fixed center, or if H_0 were kept on the center-line L_0K_0. The displacement L_1L_0 is proportional to that of the piston from its mid-position, but is reversed in direction; so that

Digitized by Google

it is just what would be given by an eccentric diametrically opposite to the crank. Finally, the displacement HH_0 is the same as BB_0, and is increased at LL_1 in the ratio of LK to HK: and the total valve-travel LL_0 is the sum of L_1L_0 and LL_1.

In III. we show how these displacements can be expressed as if directly due to eccentric-radii. To get definite relations, we let

R = crank-arm OC, r = eccentric-radius OE,
DP = k_0, BP = k,

Maximum length of PB upward $= k_1$,
Maximum length of PB downward $= k_2$,

$$\frac{\text{LH}}{\text{KH}} = m, \qquad \frac{\text{LK}}{\text{HK}} = n.$$

Then the displacement L_1L_0 would be produced, as stated above, by an eccentric opposite to the crank, and with the radius $r_0 = mR$, which is shown as OE_0, with OD as its travel-distance, the same thing as L_1L_0. The actual eccentric is laid off at OE′; its effective length varies and reverses as B moves in the link: and in order to combine it with OE_0, we measure it up or down from E_0 on a line perpendicular to OC. Thus for the mechanism as drawn.

$$EE_0 = rn\frac{k}{k_0}; \quad \ldots\ldots\ldots \quad (316)$$

while for the extremes we should have

$$E_1E_0 = rn\frac{k_1}{k_0}; \qquad E_2E_0 = rn\frac{k_2}{k_0}. \quad \ldots\ldots \quad (317)$$

To make (316) strictly general, we should give k an algebraic sign, indicating the direction of PB: but it is just as easy to keep track of direction on the figure, and use (316) or (317) as simply a quantitative formula.

The geometry of this figure, with the projection EF of the eccentric EE_0 representing LL_1, and combining with FS or DO from E_0O to give ES as the total valve-travel, is very simple. In this

Digitized by Google

deduction we disregard, of course, all effects due to oscillation angularity of the rods 2, 6, and 7, and of the connecting-rod, a to the curvature of the link—all which would modify slightly principal, harmonic motion: and in taking E at a single poi we do not consider slip of the block in the link.

Since the locus of E is straight, slip cannot alter the le but it may affect the cut-offs considerably. Thus in Fig. it is evident that, on account of the slant of the suspension-li to the left, B will rise above the mean position during admiss to the left-hand end of the cylinder, will fall below for the otl end: this will retard cut-off in the forward stroke, and will tl tend to equalize the cut-offs. The proper amount of distorti from symmetry in the adjusting-gear, necessary to a desired effe could be found only by a close investigation: and it is to be not that any such distortion will favor the steam-distribution for o direction of running, at the expense of that for the other dir tion.

(*d*) THE JOY VALVE-GEAR.—An example of this mechanis likewise taken from a German locomotive, is given in Fig. 3

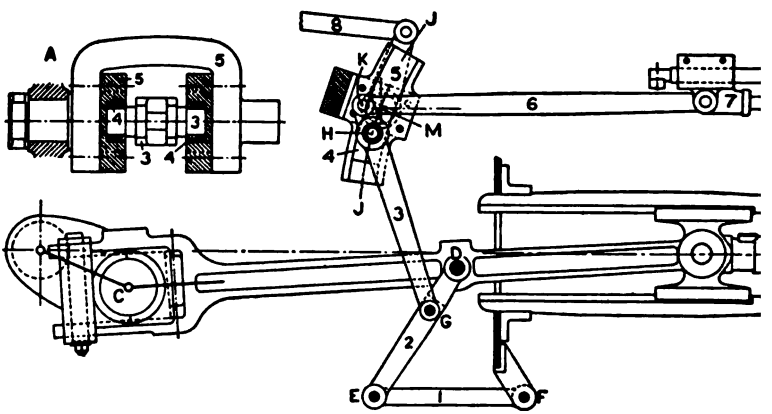

FIG. 394.—The Joy Valve-gear.

The whole movement is derived from a point near the middl of the connecting-rod. The block 4 slides up and down in th

Digitized by Google

uide 5: and while this action is essentially different from the block and link in any of the preceding gears, where only incidental, we shall nevertheless call this piece 5 . By changing the inclination of this link, the steam-ion is changed; and by reversing its inclination from the the engine is reversed. The fact that the valve is driven gh by an equivalent eccentric, shifting along a straight ile it is less apparent than with the Walschaert gear, can stablished without great difficulty.

KINEMATIC ANALYSIS.—For this purpose, we again have to a skeleton outline, shown in Fig. 395; where the

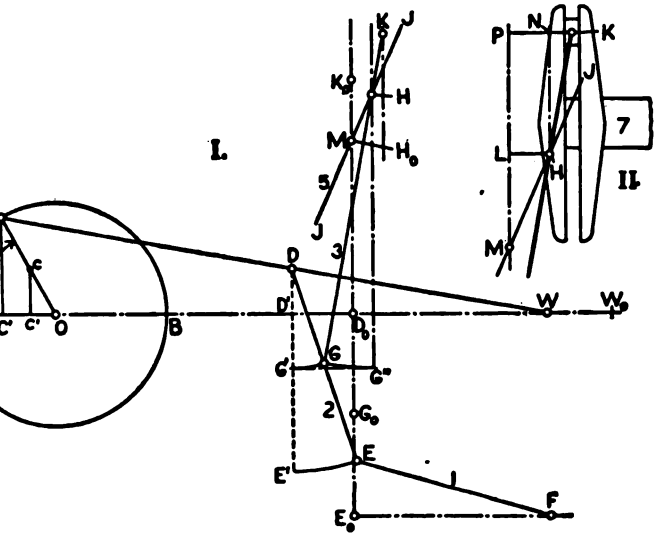

FIG. 395.—Outline of Simplified Joy Gear.

ism is modified in one particular, namely, in that the link de straight, JJ representing its center-line along which the H on the lever 3 must travel; and the movement of the lide is then taken from the pin K, not through a rod, but block and cross-slot shown at II. The deduction is as :

Digitized by Google

The vertical line K_0E_0, located by making OD_0 equal to (is an ideal mid-position for the valve-gear: the pivot M of link is on this line; and if D were brought to D_0, the levers 2 an would lie at $D_0G_0E_0$ and $G_0H_0K_0$.

The horizontal displacement of D from D_0, given by D′ is intermediate between the harmonic piston-distance C′O a the actual distance WW_0 from mid-stroke: in other words, moves over the same range as the piston, but receives only part of the effect of the angular swing of the connecting-r If E travelled in a vertical straight line, the distance of G fr D_0G_0, which we shall call h_1, would be a constant fraction of D′ determined by GE/DE or m. Actually, the drawing of E the right, on account of the swing of EF, compensates for rod-effect at D′, so that G has almost perfect harmonic mot horizontally; and h_1 is given by the relation

$$h_1 = mR \cos \alpha. \quad . \quad . \quad . \quad . \quad . \quad . \quad . \quad (3$$

Vertically, DD′ bears to CC′ the constant ratio $n = DW/C$ and if we imagine the lever DE detached and swung to DE′, a HG to HG″, we see that the angularity-effects of these two r will, with good proportions, practically neutralize each oth so that the displacement v of H from H_0, shown as LM at II., v be harmonic, and will have the value

$$v = nR \sin \alpha. \quad . \quad . \quad . \quad . \quad . \quad . \quad . \quad (3$$

Since the path of H is inclined, the effect of v will be to gi this point a horizontal displacement also, namely, LH at I or h_2: and if we let p be the tangent of the angle JMP, we get

$$h_2 = npR \sin \alpha. \quad . \quad . \quad . \quad . \quad . \quad . \quad . \quad (3$$

Then the distance GG″, which determines the swing of GH fr the vertical, is

$$(h_1 + h_2) = R(m \cos \alpha + np \sin \alpha). \quad . \quad . \quad . \quad (3$$

Digitized by Google

The movement NK, due to this swing, will be proportional to GG″ in the ratio KH/HG, or k; and for NK or h_3 we get

$$h_3 = kR(m \cos \alpha + np \sin \alpha). \quad . \quad . \quad . \quad . \quad (322)$$

Finally the valve-travel PK or t will be

$$t = h_2 + h_3 = kmR \cos \alpha + (1+k)npR \sin \alpha; \quad . \quad . \quad (323)$$

where R = radius of crank, k = HK ÷ HG,
m = GE ÷ DE, p = tan JMP.
n = DW ÷ CW,

(*f*) THE EQUIVALENT SINGLE ECCENTRIC.—Equation (323) is embodied in Fig. 396, similar to Fig. 393 III. Making $OE_0 = kmR$ (constant), and $E_0E = (1+k)npR$ (variable with p), we see at once that the two parts of t are given by SF and FE. The limits of E, at E_1 and E_2, are determined by the extreme values of the tangent or slant-ratio p.

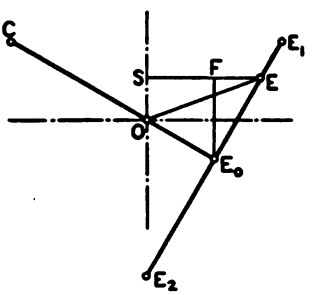

FIG. 396.—Equivalent Eccentric.

(*g*) THE CURVED GUIDE-LINK.—We must now substitute for the straight guide JJ the actual curved slot, in order that the travel may be properly transmitted to the valve by a simple rod. In Fig. 397 I. this part of the mechanism is shown in mid-gear—that is, for $p=0$—and also as if D were brought to D_0 in Fig. 395. The link-arc J_0J_0 is struck with a radius HO equal to the length of the valve-rod.

The effect of the curved guide is shown by the comparison between II. and III. The former is the same as Fig. 395 II.: in the latter, giving JJ the same inclination from J_0J_0, we see that PK is just a little larger than with a straight link. The arc K_0P, struck as if from V in I., is the reference-line for mid-position of valve.

Digitized by Google

This last effect is small, and a determination of its amount and manner of variation would involve a closer study of the valve-gear than is here desirable. It is apparent, however, that there ought to be large possibilities in the direction of equalization of cut-offs, with judicious distortion of this mechanism from symmetry of arrangement.

(*h*) PRINCIPLE OF THE RADIAL GEAR.—It is now apparent that the fundamental principle of these gears is the combination of two eccentric-radii, a constant component along the crank-line and a variable component perpendicular to this line. In the Joy

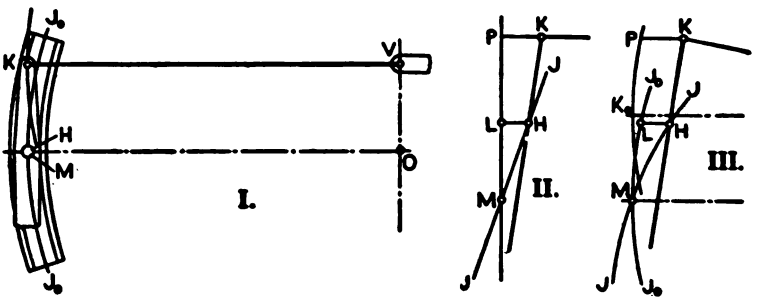

FIG. 397.—Curvature of the Link.

gear, both components are derived from the main crank; in the Walschaert, one is taken from an eccentric, the other from the crank (at the cross-head); and in a third typical case, illustrated at Fig. 488 in connection with another part of the subject, both components are derived from a single eccentric. In all these arrangements, as pointed out above, there is likely to be a considerable modification of the principal, harmonic movement by secondary influences.

(*i*) MERITS OF THE RADIAL GEARS.—These valve-gears have one advantage in that they require very little room sidewise—that is, in a direction measured along the axis of the engine-shaft so that where the engine is cramped for space, as in a locomotive with inside cylinders, they can be more easily accommodated than the Stephenson gear. And when the valve-chest is most conveniently placed on top of the cylinder, as in the locomotive, or in

Digitized by Google

front of it in a marine engine—that is, in general, in the plane of the main working mechanism—then these gears obviate the need of a rock-shaft to transfer the movement.. They have more joints than the link-motion, unless the latter is complicated by a lot of extra transmitting-rig, as in Fig. 366: and in the Joy gear, the curved guide is not a very good feature from the point of view of lubrication and wear.

They are used chiefly on locomotives, sometimes on marine engines. The locomotive from which Fig. 394 was taken is a four-cylinder compound; the inside cylinders have the Joy gear there illustrated, the outside cylinders have Walschaert gears. For the latter, the return-crank is a very effective device for carrying the eccentric.

§ 53. The Double-valve Gear.

(*a*) General Considerations.—It has been made clear by Figs. 338, 348, and 351 that when early cut-off is secured with a single slide-valve, the lap must be relatively very large and the port-opening small; and that the compression must begin early in the return-stroke, on account of the great angular advance of the eccentric. To prevent early compression from running too high, the clearance must be large; but while large clearance is incidental to the design, and unavoidable, in most high-speed engines, and while a good compression is mechanically advantageous when the inertia-force of the reciprocating parts is large, a closer search for economy renders desirable a valve-action which will not cut away so much of the possible effective area of the steam diagram as is lost, for instance, in Fig. 31. Simpler than the arrangements with separate valves and ports for admission and exhaust, and with no limitations as to speed, the Meyer or double slide-valve gear is the first type which we shall consider as meeting the requirements of full port-opening, quick cut-off, and the most favorable regulation of the exhaust operations.

(*b*) The Meyer Valve-gear.—In Fig. 398 the main valve V_m is extended beyond the lap-edges, so as to enclose the ports P, P;

Digitized by Google

and on its flattened back rides the cut-off or expansion valve V, which controls the passage of steam through the ports in th main valve. The latter determines the operations of admissio release, and compression, just like a single valve: it is driven b a fixed eccentric, and does not cut off until late in the stroke, s that it can give a good, full port-opening. Early and variabl cut-off is effected by the riding-valve. Very frequently the latt is driven by a shaft-governor; but in Fig. 398 is shown an ac

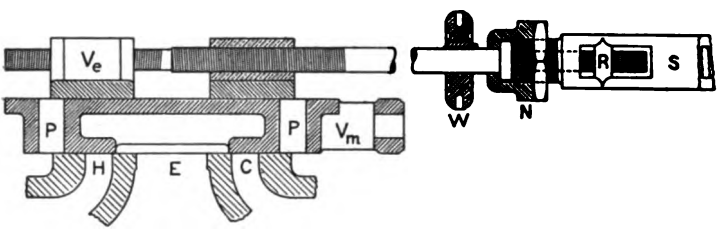

FIG. 398.—Meyer Valve with Variable Lap.

justable device (not automatic), often used on air-compressor where the governor acts by throttling. By means of right an left threads on the valve-rod, the two parts of the expansio valve can be separated or brought together so as to make th cut-off earlier or later. When adjusting, the clamping-nut is slacked off a little and the rod turned by the spanner-wheel until the indicator R is at the desired cut-off, as graduated on th slide S: then the nuts are screwed up tight.

(*c*) RELATIVE MOVEMENT OF THE CUT-OFF VALVE.—In th diagram of the eccentrics, Fig. 399, E_m is the center that drive the main valve, while E_e drives the expansion-valve; and th absolute movement of the latter, or its movement with referenc to the fixed valve-seat, is determined by the rotation of the eccen tric-radius OE_e. We are interested, however, not in the absolut position of V_e at any distant, but in its position on V_m: and thi relative travel is got by thinking of V_e as driven on V_m by th eccentric-radius E_mE_e, or r_v. The geometrical relation involve is simply that SE_e, the horizontal projection of E_mE_e, gives alway the distance of the center-line of V_e from that of V_m. The fac

Digitized by Google

that this crank-arm rotates about a moving point E_m is immaterial; but this movement of the center of rotation can be eliminated by shifting r_v to OE_v, or to the opposite side of a parallelogram of eccentrics: then since $S'E_v$ is always the same as SE_e, we have that V_e would be driven on a fixed valve-seat by OE_v just as it is actually driven on its moving seat by E_mE_e. The radius r_v we call the virtual eccentric; and its angle δ is measured off as indicated on Fig. 399.

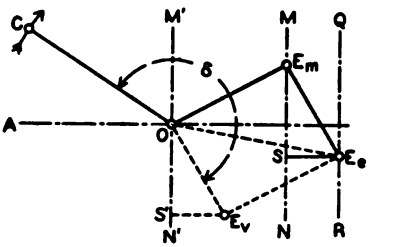

FIG. 399.—Relations of the Eccentrics.

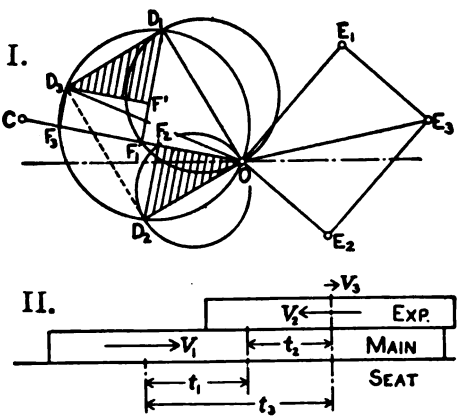

FIG. 400.—Relative Motion Illustrated.

The ideas just stated are expressed in yet more graphic form in Fig. 400, where the three valve-circles are drawn in the usual manner, and the crank is taken at any position OC. The relation between the three travel-distances, namely,

$$OF_3 = OF_1 + OF_2, \quad \text{or} \quad t_e = t_m + t_v, \quad . \ . \ . \quad (324)$$

is clearly shown on I.; this is further brought out at II., as also the fact that the absolute velocity V_3 of the riding-valve is the

Digitized by Google

resultant of the absolute velocity V_1 and the relative velocity V
It will be noted that the two valves are never simultaneously
mid-position, as drawn for illustrative purposes in Fig. 398.

(*d*) FUNCTIONS OF THE CUT-OFF VALVE.—It is required of th
valve that, being out of the way when main-valve admissi
begins, so as to leave a clear passage into the port P, it shall the
close this port quickly at some desired instant, earlier or late
in the stroke of the piston. Any crank-driven slide moves mo
rapidly when near the middle of its stroke; consequently, th
cut-off valve must have a small lap if it is to be in rapid motio
when closing its port. Very often the lap is negative, or th
valve does not cover the ports when in mid-position, as is th
case in Fig. 398.

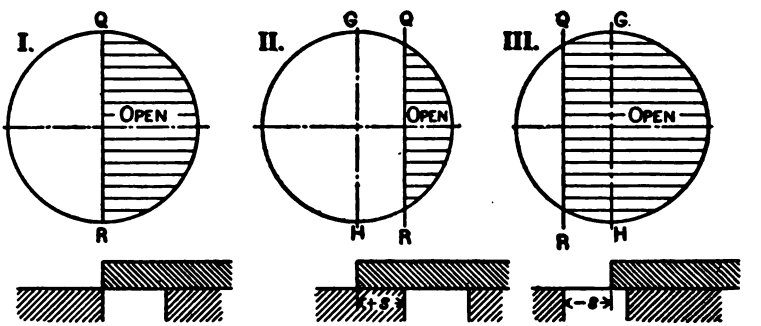

FIG. 401.—Effect of Varying the Lap.

(*e*) POSITIVE AND NEGATIVE VALVES.—Certain ideas funda
mental to the whole matter of valve-action are given concret
and complete expression in Fig. 401. By means of primar
diagrams of the ordinate type (the simple eccentric diagram o
Figs. 331 and 332), we emphasize the fact that the importan
result sought in any determination of valve-motion is the move
ment of the valve-edge with reference to the port-edge, rathe
than of the center of valve with reference to center of seat—thi
by markedly substituting the lap-line QR for the center-line GE
as a reference-line. Further, we show in II. how with positiv
lap the period of opening is less than half a revolution, so tha
the single valve is necessarily of this type, on the steam side a

Digitized by Google

least; while the valve with negative lap, or the negative valve, opens its port for more than half a revolution, and can therefore control only one operation. Rotating II. into the regular Reuleaux-diagram position, we easily see that the eccentric driving a single valve must, of necessity, be in the second quadrant ahead of the crank if the valve is direct, in the fourth if it is indirect.

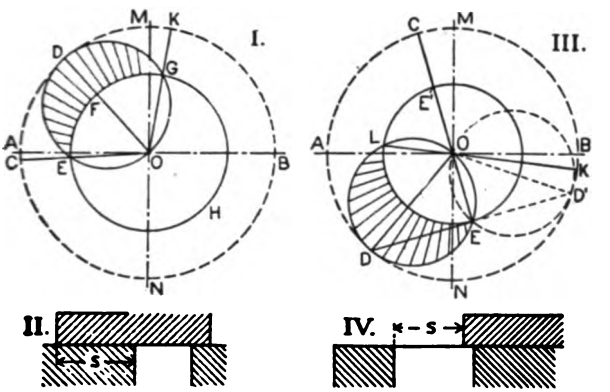

FIG. 402.—Locating the Valve Diagram.

(*f*) ECCENTRIC-SETTING FOR THE NEGATIVE VALVE.—In Fig. 402, Zeuner diagrams are used to illustrate these same ideas, and to show how the eccentric-setting for a negative valve is determined. I. and II. are entirely obvious, but we now lay especial stress on the facts that the crescent EDG is a diagram of port-opening, and that the cut-off intersection G determines the crank-angle for which the valve is at the distance *s* to the right, but is moving toward the left.

With the negative lap $-s$ shown at IV., let us require that the valve close the port when the crank is at OC in III. The lap-circle is drawn with absolute radius *s*, algebraic sign having no immediate significance. For cut-off, the valve must be to the left, wherefore the valve-circle must necessarily go through E instead of E′: and the fact that the negative travel-intercept must increase as the crank advances puts the circle in the full-line position on OD, as against that on OD′. The crescent EDL is

Digitized by Google

now a diagram of port-closure; and we see further that it is characteristic of a negative cut-off valve, if of the outside-admission type, to have its valve-circle in the fourth quadrant, and its virtual eccentric in the third quadrant ahead of the crank.

(*g*) VARYING THE CUT-OFF.—The action of the device in Fig. 398 is shown by Fig. 403, where cut-offs are determined for laps varying by quarters from minus three-fourths to plus three-fourths of the radius of the virtual eccentric. Through comparison with Fig. 402 III., the diagram is self-explanatory. One point to be noted, especially marked for the cut-offs designated +3 and −3, is that the valve-edge approaches the cut-off position more rapidly from the negative than from the positive side, the curvature of the valve-circle showing this very clearly. Another point is, that with a large negative lap the period of closure is short; so that if the cut-off is very early, the expansion-valve may reopen its port before the main valve cuts off. This possibility exists only with extreme proportions, and belongs rather to the method of regulation typified in Fig. 404.

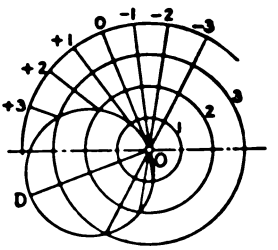

FIG. 403.—Control by Variable Lap.

In Fig. 404 I., with a negative lap equal to half of r_v, the valve-circle is located for cut-off at 0.1, at 0.3, and at 0.5 of the stroke: and at II. is given a diagram showing how the center E_2 of the expansion-eccentric will have to be rotated about E_1 in order to secure this effect. It is a simple matter thus to pivot the second eccentric at the center of the first, and place it under the control of a shaft-governor of suitable design. A wider range of cut-off would be covered than is here shown: and it is apparent that the eccentric must be rotated by the governor through an angle equal to the crank-angle between earliest and latest cut-off.

(*h*) THE BUCKEYE VALVE-GEAR.—In Fig. 405 is outlined an interesting device whereby the effect of a rotation of the virtual about the main eccentric is secured from a governor which really rotates the expansion-eccentric about the center of the shaft. The

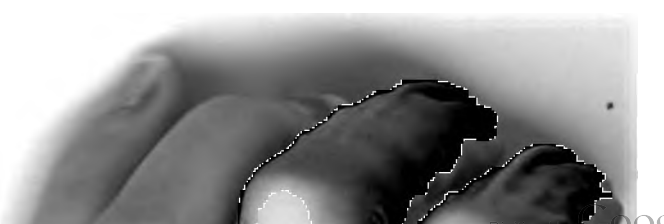
Digitized by Google

sketch of the compound rocker-arm, at II., helps to make clear the action. The cut-off rocker GBD is pivoted at or near the middle of the main rocker AF; and the path of the lower pin G

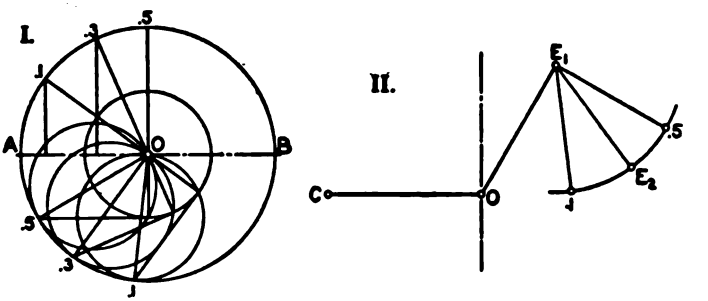

FIG. 404.—Rotating the Virtual Eccentric.

passes right by the fixed center A. If E_2 were brought to O and held fast there, the two rockers would swing together almost as a rigid piece: but if G receives from E_2 harmonic motion with respect to A—or, to be more precise, with respect to its own mid-position

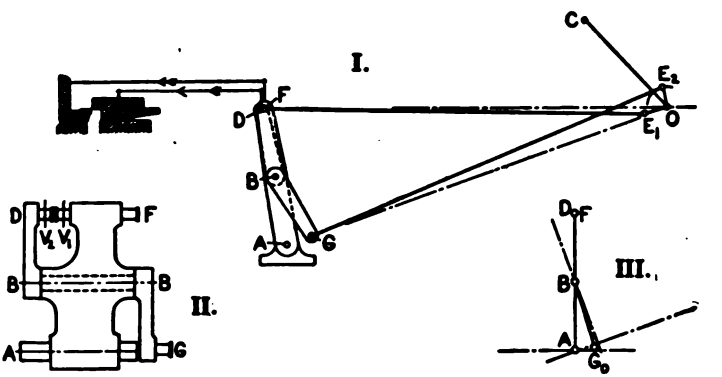

FIG. 405.—The Buckeye Valve-gear.

as shown at G_0 in III.—this absolute motion will be changed to relative motion of D with respect to F at the top of the rockers. The reversing effect of the riding rocker-arm is neutralized in the usual manner, by reversing the eccentric. A partial section of

Digitized by Google

the valves, taken from Fig. 253, shows their relative movemen with the main port not quite fully open, and the cut-off val getting ready to close. Both eccentrics are in the "indirect" se ting, E_1 because its valve is of that type, E_2 on account of tl rocker reversal.

At III. the two rocker-arms are shown in mid-position. A proximately, BG_0 is at right-angles with the line AO; though appears that the effect of secondary movements of G will be le if G_0 is a little to the left of the foot of the perpendicular from upon AO. This is, however, a matter which would require a clo detailed investigation, besides being of small relative importan Of course, the angle which the stroke-line of the expansion-ecce tric E_2 makes with that of the engine must be taken into accou in setting this eccentric.

(*i*) VARYING THE VIRTUAL ECCENTRIC.—Moving the center this eccentric along an arc struck from the main eccentric, as

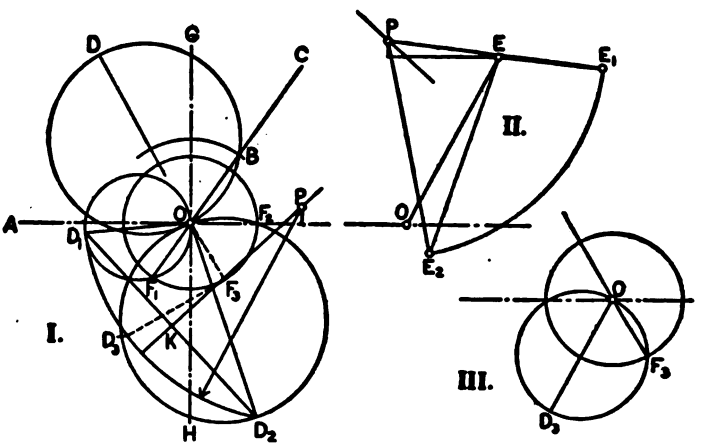

FIG. 406.—General Case of Change in Virtual Eccentric.

Fig. 404, is only a particular case of the general operation of shi ing this center along a definite locus. The problem illustrat in Fig. 406 is more general in its terms, and serves to bring c some important properties of the double-valve gear. Havi

Digitized by Google

the main valve-circle OD and the lap OB, we find the latest cut-off at OC: and the problem is, to design a gear which will change the cut-off all the way from OC to zero, or to OA, with the least angular movement of the virtual eccentric, but with variation in the length of this eccentric permitted.

Referring to Fig. 402 III., we see that, with a given negative lap, shortening the eccentric-radius will make the cut-off later: or, since to turn OD toward ON, against the direction of crank-rotation, is equivalent to advancing the eccentric, the smaller eccentric will not have to be turned so far back for a late cut-off as would a larger one. In Fig. 406. for the small circle OD_1, this same fact is shown by the great convexity of the segment based on OF_1, as compared with that on OF_2: which is another way of saying that angle F_1OD_1 is less than F_2OD_2. These considerations make it clear that, with a determinate angle F_1OF_2 of cut-off variation, the angle D_1OD_2 of eccentric variation is made less by using a small valve-circle for the late cut-off and a large one for the early cut-off.

Having chosen D_1 and D_2, the natural locus connecting them is a circular arc from some point on the perpendicular KP, drawn at the middle of the chord, D_1D_2. The farther away P is taken, the less will be the angular movement of the swinging eccentric. Fixing upon a particular position of P, we draw the locus of D. Then transferring O to E in II., and reversing the whole figure with reference to a vertical axis, we get the locus E_1E_2 of the expansion eccentric, on the plane of the shaft-governor. With early cut-off, it is interesting to note how small becomes the radius of the expansion-eccentric, which gives the absolute motion of the riding-valve.

At III. is drawn the valve-circle for quarter cut-off, the dotted lines in I. showing how D_3 is located. It does not appear that considerations as to steam-distribution will have much influence in establishing a certain curvature of $D_1D_3D_2$ as the most desirable.

The advantage of the regulation in Figs. 404 and 405 is, that the cut-off valve has a constant travel on the main valve, so that wear will be uniform. In the case of a valve with variable travel, but with a stroke less than the maximum prevailing most of the

Digitized by Google

time, there will be a non-uniform wear of the seat, leaving a slight shoulder or rise at the limit of the usual travel.

(*j*) CUT-OFF VALVE WITH THE STEPHENSON LINK-MOTION.—This is the last case of the application of the riding-valve which we shall investigate, using the diagrams given in Fig. 407. At I. is shown the arrangement of the eccentrics, the cut-off valve being driven by the fixed center F, so that the virtual eccentric

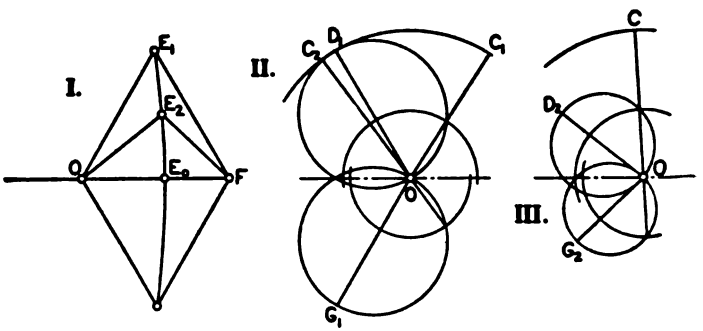

FIG. 407.—Diagrams for Cut-off Valve with Link-motion.

is E_1F, E_2F, etc. Valve-diagrams for full gear forward are drawn at II., showing main-valve cut-off at OC_1, that by the second valve much earlier, at OC_2. The proportions of the figure are so chosen that for half-gear, at III., the two cut-offs are simultaneous, and at the latest possible point. It appears that this arrangement would be suitable for a reversing-engine which was to work with a high ratio of expansion; but it gives a rather peculiar manner of variation of cut-off with reverse-lever position. It has been used on compressed-air motors.

(*k*) INDICATOR DIAGRAMS from engines with the double-valve gear are given in Fig. 408. The first set was taken from an engine with a load that fluctuated continually and widely, the effort to follow it keeping the governor dancing. The several expansion curves traced are selected from a large number of closely-spaced lines: constant compression and a quite sharp cut-off are the distinguishing features of these diagrams. At II. the admission pressure drops as the piston speeds up toward mid-stroke, prob

Digitized by Google

ably because the ports in this rather old engine are inadequate in size; but the cut-off curve is still quite short. Rather different diagrams, with late admission and very short compression, are

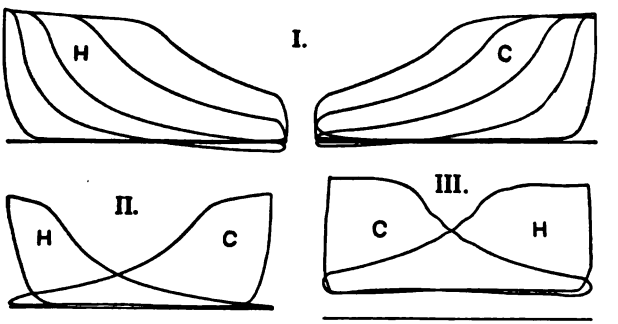

FIG. 408.—Indicator Diagrams from Engines with the Double-valve Gear. I. Buckeye Engine, 16″×24″, 145 R.P.M.; II. Buckeye Engine, 16″×32″–110; III. Air-compressor, 10″×12″–145.

shown at III. Compare with all these the Corliss-engine diagrams in Figs. 465 and 476.

§ 54. Various Forms of the Slide-valve.

(*a*) TYPES OF VALVES.—The simplest possible plain slide-valve is that used for illustration in Figs. 9 and 334: it makes provision only for the essential functions of the steam-distribution. In practical application this primary valve is modified and complicated along two lines: usually the valve is "balanced," or arranged so that it will not be forced hard against its seat by the steam-pressure; very often the valve is so formed that it will permit flow past several edges, or it is made "multiple-ported."

A review of the cylinder drawings given in § 43 will show pretty clearly the following three typical forms of the slide-valve:

1. The single-faced flat valve with a relief device on the back, as in Figs. 247 to 249.

2. The double-faced flat valve, usually under a rigid balance-plate, as in Figs. 6 and 7 and Fig. 250. The double-seated valve in Fig. 251 is a special form under this heading.

Digitized by Google

3. The piston-valve.

In illustrating and describing a large number of valves besid those already given, we shall use two principal points of vie examining the valves with regard to—

A. FORM, with reference to the functions of the steam-d tribution;

B. BALANCE AND TIGHTNESS, and incidentally the possibility relieving excessive pressure in the cylinder.

(*b*) LOCOMOTIVE VALVES, when flat, are usually of the fl type; one good example has been shown in Figs. 247 to 24 and another is given Fig. 409. The balance-rig is quite differe in form in the two cases, though the same in effect; and it is distinctive feature of both designs that this rigging is flexible, p mitting the valve to rise easily for relief of the cylinder. Furth this flexibility obviates the need of extremely accurate parallelis between the face of the balance-plate and the valve-seat—a co dition which is rather difficult of perfect attainment with t copper-packed joints between the cylinder-table and the val chest cover.

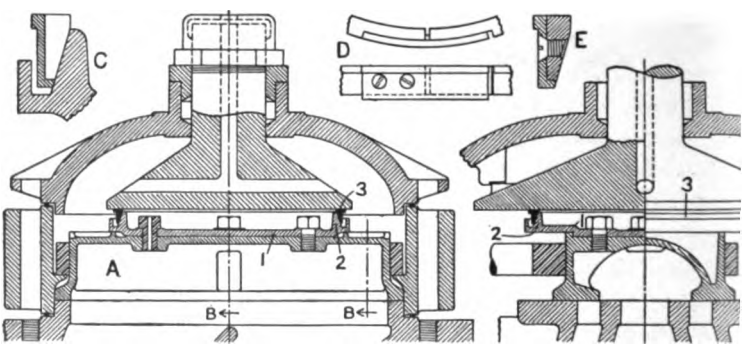

FIG. 409.—Locomotive Valve with "American" Balance-rig; special design by the Pennsylvania Railroad. Scale 1 to 12.

In Fig. 409, the circular plate 1, securely bolted upon the b of the valve, carries a cone 2 on which fits the spring-ring 3. T ring is cut and has a joint formed as shown in detail at C, D, E. In the normal position of the valve, the ring is sprung o

Digitized by Google

just a little, so that its own elasticity keeps it up against the balance-plate: in action, it is forced tightly against both plate and cone by the pressure of the steam. If the valve is lifted from its seat, the ring opens; but slides up again on the cone as the valve returns. The space inside the ring is relieved to the exhaust-port through the hollow tap-bolts. Valves made under this patent sometimes have the cone formed right upon the main casting instead of on a separate plate—especially when two small rings are used instead of a single large one.

The balance-plate in this particular design is of unique and unusual form—being supported by a big central stud cast with it, and drawn up by a single large nut against four lugs, as shown at the left side of view B, which steady it against any tendency to rock: in the center of the stud is an oil-conduit, branching to the sides of the plate. The type of plate in Figs. 247 and 248 is, however, decidedly the usual thing.

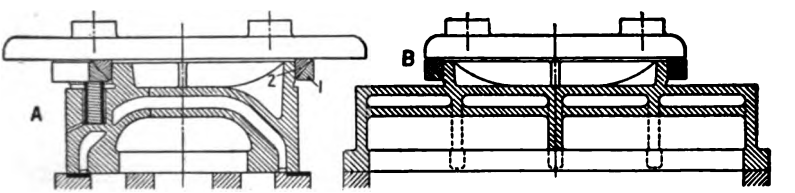

FIG. 410.—German Locomotive Valve with Allen port. Scale 1 to 15.

Fig. 410 shows another valve with a circular relief-ring: here the outer ring 1 is made solid and held up by four helical springs in pockets; the inner ring 2 is cut, and its cylindrical inside surface fits against a segment of a sphere formed upon the valve. A special feature of this valve is the auxiliary port, which passes steam over from the far side of the valve to supplement the regular admission; the two equal steam-laps which control admission to the left-end port are emphasized in the figure, that for direct admission at the left, the other at the right end of the valve. Writers in English call this the Allen valve; in German it is the Trick valve, from a contemporaneous inventor. When a single valve is to give early cut-off, it is entirely logical thus to provide

Digitized by Google

for double admission on the steam side with only a singl
for exhaust, because of the great inequality in the
laps and in the widths of opening of the port. In this fi
is a decided negative lap, or "clearance," on the exhaust

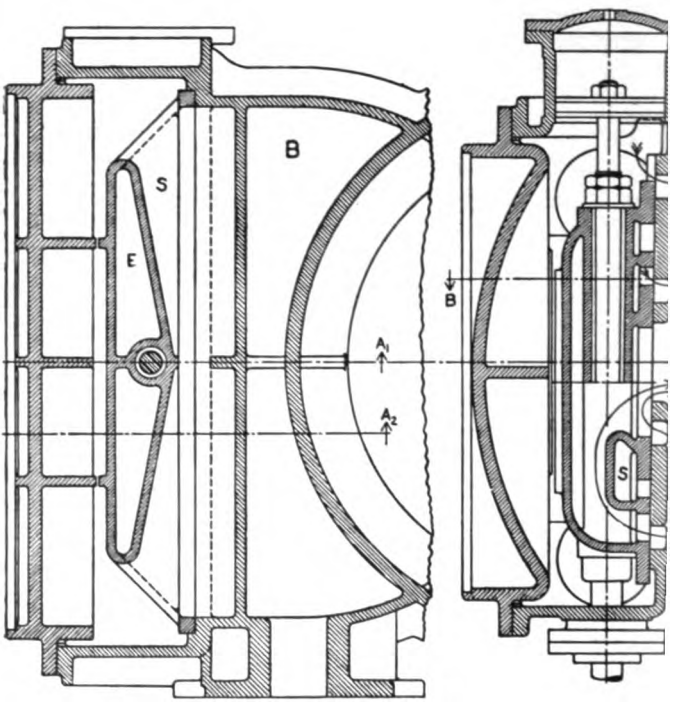

FIG. 411.—Double-ported Valve for low-pressure cylinder of eng
shown in Figs. 259 and 260. Scale 1 to 12.

(*c*) FLAT VALVES FOR MARINE ENGINES.—Flat val
been used in some rare cases for the higher cylinders c
engines; but on the lower-pressure cylinders they are v
mon. Double opening is generally secured by the arra
shown in Fig. 411. Inside of a long D valve, which has a
face to control each of the outer ports, is placed a secon
face with the same laps, for each inner port; and there
room to form over and outside of this inner face a pocket

Digitized by Google

ber which will conduct steam inward from the sides of the valve-body. The action as to steam-flow is clearly shown by the arrows in view A, and the form of the steam-pockets by the section of the valve at B. This rather small valve has no relief-device, but there are guides on the valve and on the chest-cover to keep the valve from falling away from its seat when steam is shut off. To permit rising for cylinder-relief, the hole for the valve-rod is made with considerable clearence, and the nuts are not screwed down tight enough to grip the valve. The use of a lifting or compensating piston, to balance the weight of the valve and perhaps a part of the weight of the valve-gear, and thus equalize the pressures on the eccentrics, is almost universal. On the higher valve-chests, the top of each balance-cylinder is connected to the next receiver; on the low-pressure chest the pipe runs to the condenser.

A larger valve of this same double-ported type is shown in Fig. 412. As to the valve itself, we note the lightness of the casting and the free use of stiffening-ribs. Other notable features are, the "false" or separate valve-seat, fastened to the cylinder-casting by sunk-head screws, made of hard bronze, and renewable when worn out; and the special form of relief-ring, connected to the body of the valve by an annular diaphragm made of copper or of some copper alloy: the detail of this device is shown at D.

Sometimes the auxiliary valve-face of Figs. 411 and 412 is duplicated, giving triple opening, as in Fig. 413. With this increase in effectiveness goes an increase in the size of the valve and its greater complexity as a casting, together with a larger clearance-volume in the cylinder. There are even cases on record of four-ported valves of this type, but that seems to be going too far. In the figure under discussion we have a type of relief-ring which is more in accord with regular marine practice, in that it is held in the cover and slides on the valve, instead of moving with the valve as in previous examples. Further, the ring is circular, instead of being rectangular as in Fig. 412 and in earlier designs which somewhat resembled Fig. 249. But in its detail, shown at B, this relief-ring is rather peculiar, the type of arrangement shown in Fig. 423 being usual. Here the fitting-ring 2

Digitized by Google

appears to be pressed into the cover and fastened wit
between 2 and 3 there is a close sliding fit; and 3 is presse
the valve 4 by a circular spring marked 5.

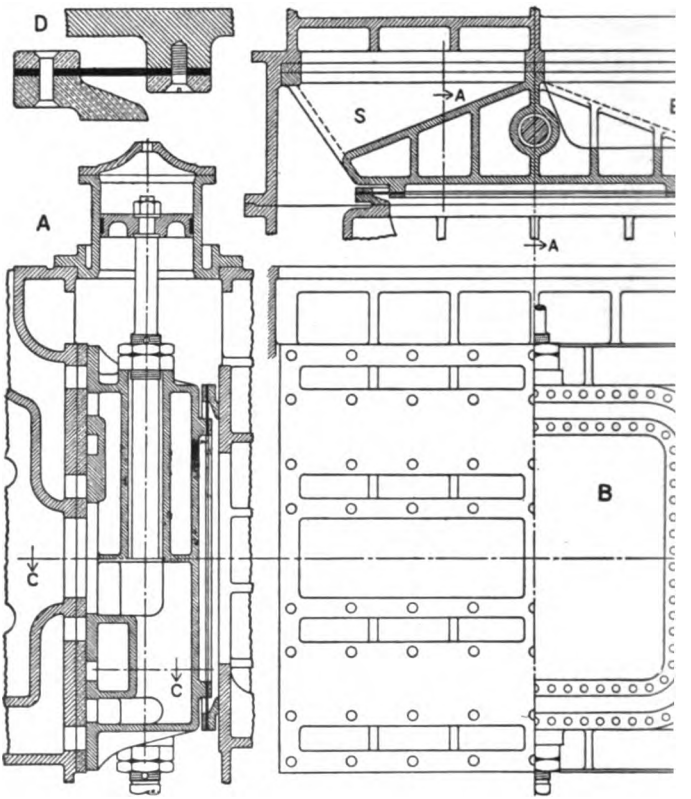

FIG. 412.—Valve for Low-pressure Cylinder of engine partly sho
273 I. Scale 1 to 24 and 1 to 6.

Occasionally, with large valves of this general type, th
steam is carried out through an opening in the back of t
inside the relief-ring, instead of going into a passage form
the valve-seat; then the seat can be brought closer to the

Fig. 414 shows an interesting adaptation of the two-
valve under a rigid balance-plate, with double opening

Digitized by Google

admission and exhaust. The form of the plate, with the manner in which it is supported and held in place, is clear from the draw-

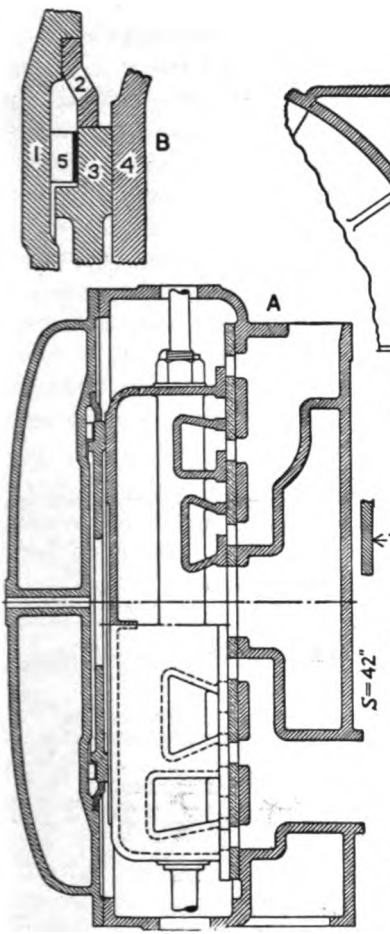

FIG. 413.—Triple-ported Valve, recent British cruiser. Scale 1 to 24.

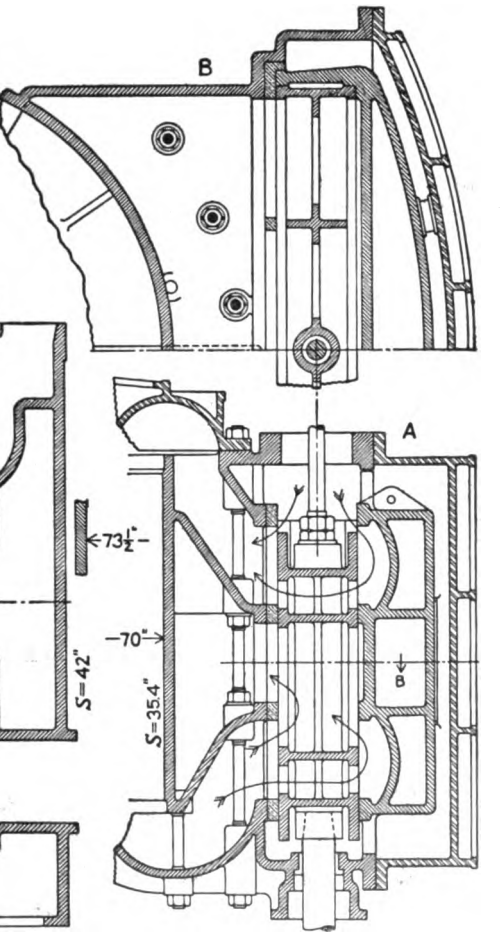

FIG. 414.—Large Two-faced Valve, for L. P. cylinder of cruiser engine. Vulcan Works, Germany. Scale 1 to 24.

ing. As a structural detail, we note the free use of stay-bolts to brace the port-walls, already referred to in § 43 (r).

Digitized by Google

(*d*) SPECIAL FORMS OF THE FLAT VALVE.—A possible seldom used form is the B valve, sketched in Fig. 415.

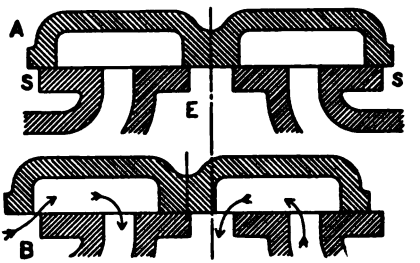

FIG. 415.—The B Valve.

admission as well as takes place through a in the under side of th and with steam fill chest as with the c direct valve, the mc for opening and clc that of the indirect For a given set of tions—port-widths a —this valve necessarily exposes a larger area to the stea sure than does a D valve. In the form here shown it i only in some small simplex pumps; but its essential fc action are frequently embodied in the piston-valve, as for in Figs. 254, 255, 436, and 441.

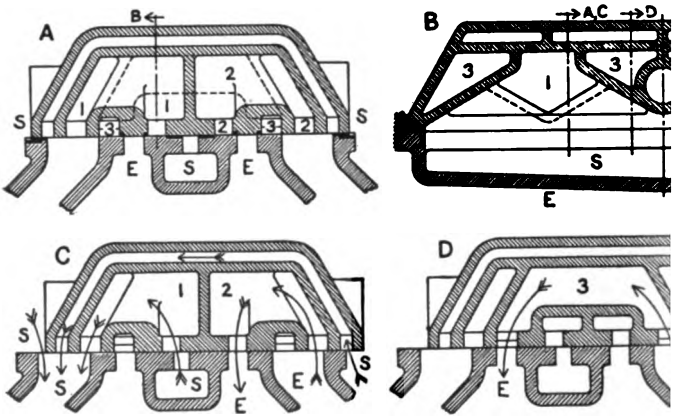

FIG. 416.—A Very Complicated Flat Valve.

A single-faced flat valve with triple opening for admiss double for exhaust is shown in Fig. 416. It is of German and appears to be at about the limit of possible or p complication. The special feature of the valve-seat is th pocket and extra port in the middle, the pocket opening

Digitized by Google

into the steam-chest. The valve has first an Allen port of usual type; inside of this are the chambers 1 and 2, which are rated by a middle partition, and from which steam can pass the middle port to either main port; and besides these there other chamber 3, analogous to the Allen port and best shown iew D, which furnishes second passage for the ust. How these various ages combine without rference can be seen in cross-section at B. The eral laps are blacked on v A, those for admission n the valve-seat, the ex- st-laps upon the valve. Occasionally a valve with essential form of the mon slide-valve is made oscillate on a curved indrical) seat, somewhat after the manner of a Corliss valve.

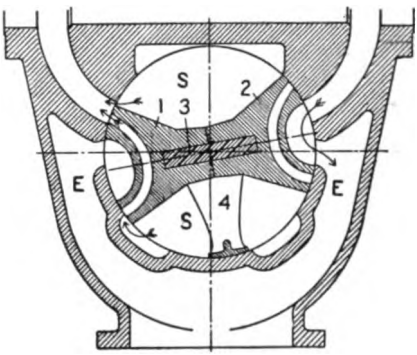

FIG. 417. — Oscillating Valve for Low-pressure Cylinder of tandem-compound engine.

example much more complicated than a simple adaptation he D valve is given in Fig. 417: there are really two valves, nd 2, one for either end of the cylinder, each with an Allen t to give double admission. These are moved by the spindle 3, ch is broadened in the middle to a flat slab; and the weight he whole valve is carried by the support 4, which is fast to the ndle. The latter passes out through a stuffing-box and is oscil- ed by a crank keyed to it and driven by the eccentric-rod.

(*e*) PROPORTIONING THE VALVE.—Suppose that, having de- ed upon the width of the cylinder-ports and the laps, we wish design a slide-valve which shall be as short as possible, with a nimum area subject to steam-pressure. The determining con- ion is illustrated in Fig. 418 I., where the valve of Fig. 247 is own at its greatest distance from mid-position: evidently the dth of the exhaust-port and of the port-walls or "bridges" must such that the least opening between the edges A and D shall not less than the width of the port C. Similarly, the valve of

Digitized by Google

Fig. 415 is here shown at its limit of travel in II., because any further movement toward the left would choke the exhaust from the right-end port.

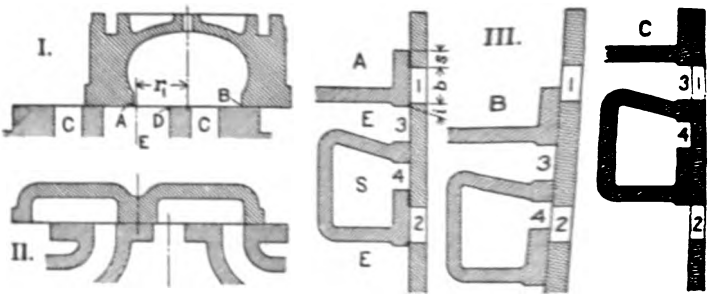

FIG. 418.—The Critical Position of Several Valves.

To build up the face and seat of a valve of complex form, with due regard to this requirement of non-interference of function, is an operation calling for an intelligent use of the cut-and-try method. As further illustrating the character of the relations involved, consider the example in Fig. 418 III., which is a detail from Fig. 413, with A showing mid-position and B and C the two extremes of travel. The dimensions b, s, and i are fundamental. At C the valve gives full opening for exhaust, and its proper limit of travel

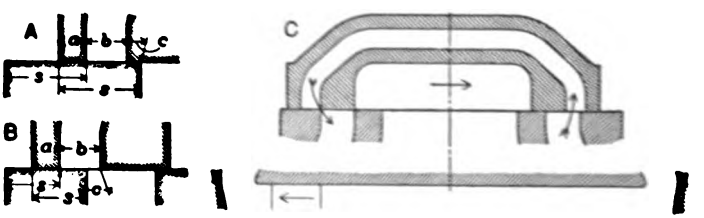

FIG. 419.—Design of the Allen Valve.

is here determined, unless opening 3 can be made wider than port 1: at the least, 3 should be equal to 1. With the same displacement in the other direction, at B, the greatest opening for admission is less than the port-width by the amount $(s-i)$, since in II. $= b-i$); and it is evident that the opening 4, as here drawn, has a little greater width than can be made effectively useful. This

Digitized by Google

opening, with the width of the wall-face between 3 and 4, fixes the least distance between the ports 1 and 2.

Negative Lap with the Allen Port.—When a valve of the Allen type has a large steam-lap, it is not difficult to keep the opening of the auxiliary port within this lap, and even to leave a small positive lap c at its inner side, as in Fig. 419 A and Fig. 410. But when the main lap s is smaller or the width b is increased, there will be a negative lap to the Allen port, as at c in Fig. 419 B and in Fig. 416. The result is, that during a brief time a passage is opened from one end of the cylinder to the other, with some tendency to modify the exhaust operations. Thus at C in Fig. 419 we have the valve yet at the distance c to the left and moving toward the right: compression has begun in the left end of the cylinder, and now steam which has not yet gotten to release in the right end is about to flow over and increase the pressure and the amount of the clearance-steam in the other end. This action will persist while the valve travels through the distance $2c$; but since it moves rapidly near mid-position and the openings involved are small, the effect upon the steam-distribution will be relatively insignificant.

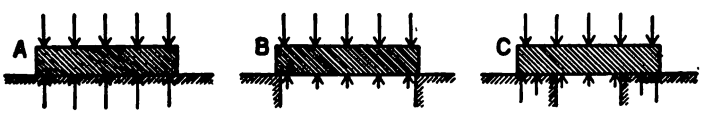

FIG. 420.—Unbalanced Pressure.

(*f*) BALANCING THE FLAT VALVE.—In order to develop certain ideas which must underlie this discussion, let us consider the simple arrangements outlined in Fig. 420. Case A, where a flat plate merely rests upon a plane surface and is surrounded by a gaseous medium under pressure, illustrates the fact that, unless very special means have been employed to get rid of it, there will be a film of the gas between the two solid bodies; and this film is here shown as exerting an upward pressure equal to that upon the top of the plate, so that only the weight of the latter comes upon the supporting plane. Case B, on the other hand, shows the plate covering a hole of almost its own size, with only a very narrow

Digitized by Google

contact-surface around the opening; then the full unba pressure upon the plate will come upon this narrow contact squeezing out the gas completely and altogether preventing age. Case C, representing the slide-valve, lies between A a With wider contact, the surfaces are less strongly squeezed to by the downward force upon the plate; the gas (or stea therefore given a chance to insinuate itself between the b and a film once formed will not only balance a part of the pr upon the top of the plate, but will tend to flow. With thi and leakage will go a drop in pressure from the high- towar low-pressure edge of the contact-surface. Positive and exa formation as to the amount and the manner of variation o intermediate pressure is wholly lacking. We can only realize there is a buoyant tendency, so that the downward force i than the product of the unit pressure-difference by the area c plate, or this whole area is not effective; and that the pla valve must be pretty strongly held down if leakage is to be vented. Obviously, the perfection of the surfaces, as to ide of form and as to smoothness, and their relative movement important elements in determining this action.

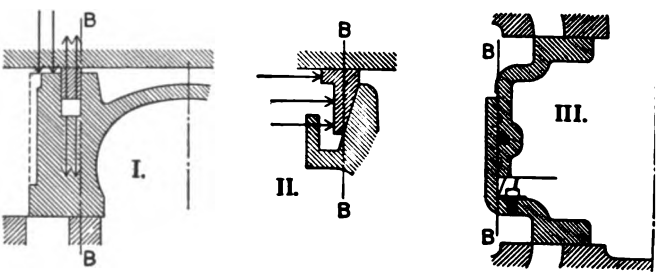

FIG. 421.—Boundary of the Relieved Surface.

Discussion of Actual Valves.—Turning now to the actual v we see at once that the area relieved of pressure must be very siderably less than that of the valve-face, to allow for a buo action of the steam under the valve and to insure plenty of f to hold the valve down. To get an idea of the proportions w experience has justified, we shall now analyze some of the ex ples that have already been illustrated. First of all, we must

Digitized by Google

just what is the relieved area with any particular device. Fig. 421 I., from Fig. 247, with the steam under the bars, the line BB very evidently marks the limit of the low-e area on top of the valve, which area is therefore the le inside of the bars. Sketch II. is a detail from Fig. 409; h the ring held tight against the cone, direct downward e is relieved from the circle inside of BB—although the y of the ring to act as a wedge (very blunt, however) will e some additional pressure, or move the effective position a little to the right. Detail III. is from Fig. 251, where m is inside, and the location of BB is self-evident.

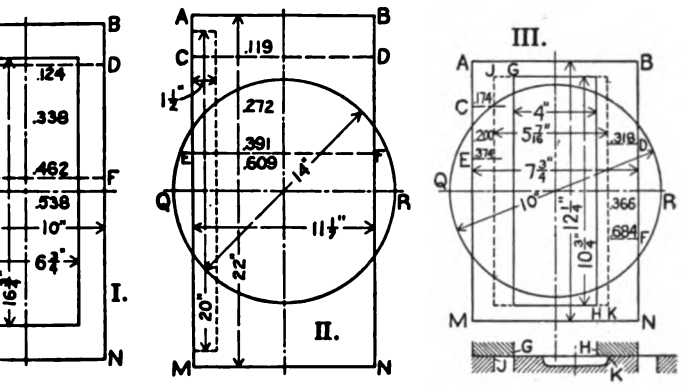

FIG. 422.—The Proportion of Relief.

line plan views of these three valves are given in Fig. 422. he total area of the valve-face MABN is 210 sq. ins.; the l area, shown by the inner full-line rectangle, is 113.1 sq. at is, of the whole area the fraction 0.538, represented by is relieved, while the rest is exposed to the full steam-e. But when one steam-port is open, as much of the valve hangs its inner edge receives the upward pressure in the ee Fig. 421 I. The limit of this action is the balancing of the rea of one port, which is drawn in dotted outline at the left Fig. 422 I., and diminishes the unbalanced area by 26.1 or 0.124 of the whole face, represented by CABD. Now balanced area varies between 0.462 and 0.338 of the valve-

Digitized by Google

face, or between 96.9 and 70.8 sq. ins. Adding to this the are of the relief-ring (the bars are $\frac{5}{8}$" wide), which is 30.9 sq. ins., w have from 101.7 to 127.8 sq. ins. exposed to the steam-pressure If the latter is only 150 lbs., and the coefficient of friction is 0.2 the resistance of the valve will range from 3050 to 3830 lbs. Th action shown in Fig. 420 C will prevent this full maximum valu from being reached; and with good lubrication the coefficien should be less than 0.2, though still very high as compared wit the value usual in shaft-bearings.

Fig. 409, analyzed in the same manner at II., shows an unbal anced area ranging from 0.391 to 0.272 of the valve-face—th circle being taken to BB as located in Fig. 421 II. The valv from Fig. 251, at III., is more complicated. Without the rect angular openings in top and bottom, the steam would act upo the 78.54 sq. ins. of the 10-in. circle to force the halves apart Subtracting the 43 sq. ins. area of the opening, we have 35.54 sq ns. as the maximum unrelieved area. This is diminished as soo as the edge H passes K (see sectional view beneath main figure) and when the port is open the whole rectangle JK is relieved instead of only GH. The area of JK is 58.52 sq. ins., and th area subject to unbalanced pressure is now $78.54 - 58.52 = 20.0$ sq. ins. The proportions of the balance are represented graphic ally, just as in the preceding cases: at the left E and C show, b their distance from A along AM, the ratio of the unrelieved area t the whole valve-face MABN; at the right, F and D show propor tions in terms of the net valve-face, outside of the steam-area, o of the figure between AN and GH. This latter is the surface tha has to be kept tight, and the effective holding area ranges fro 0.684 to 0.366 of it.

Marine-engine Relief-rings.—The usual form of relief-ring fo large marine-engine valves is typified in Fig. 423. In every cas the "ring" is circular, is held in a slot in the valve-chest cover and slides upon the back of the valve. In the first example, th pressure which makes the ring steam-tight is secured entirely b the springs; in the other two the ring has a lip upon which th steam presses, to help hold it tight. The springs are made ad justable in the best practice, either by changing the little colla

Digitized by Google

4 in I., or by a set-screw as in II. Almost without exception, some sort of packing is used, to keep the steam from getting into the recess back of the ring, the wedge-rings in I. and III. being more effective than the plain snap-rings in II.

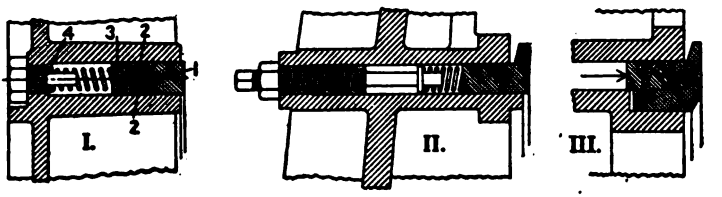

FIG. 423.—Detail of Relief-rings for Marine-engine Valves.

(*g*) THE TWO-FACED FLAT VALVE, rigidly balanced—see Figs. 6 and 7, 250, and 414—has the great advantage, as to ease of movement, that its tightness is secured and maintained by a close mechanical fit and not by unbalanced pressure. In general, it is a more delicate contrivance than the type with flexible balance, requiring a very high grade of workmanship in its fitting and adjustment: but when properly made and not subjected to too severe conditions of service, it is highly effective and will run for a long time without appreciable wear. Since the total clearance between the valve and its confining surfaces should not exceed a few thousandths of an inch, spring of the balance-plate must be reduced to a minimum by making it very stiff; and can be allowed for by very slightly arching the face when free. Irregular expansion must be avoided by warming up the engine gradually when starting. Practically, a long valve like that in Figs. 6 and 7 is of no use to relieve excessive pressure in the cylinder—even though it is not confined mechanically—because the area of the balance-plate is so many times that of the cylinder-port that a tremendous pressure in the latter would be required to lift the valve.

An interesting combination of the form of the two-faced valve with a flexible balance-rig on the principle of that in Fig. 409 is illustrated in Fig. 424. Here the pressure-plate 1 "floats", being accurately located as against horizontal displacement by the two centering rings 3, 3, which are solid (uncut) and fit into corresponding recesses in the pressure-plate 1 and the balance-plate 2.

Digitized by Google

The top of plate 1 is relieved by the large ring 4, which is sm
in area than the whole valve-face, so as to insure enough d
ward pressure for tightness. To compensate for the extra ar
the bottom of this plate which is exposed to high pressure
the port is open, a small relief-ring 5 is placed over each
receiving steam on the inside, from the port, through several

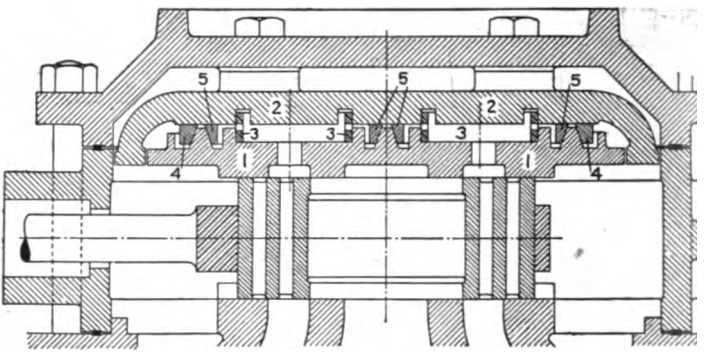

FIG. 424.—American Balance Slide-valve Company's Two-faced Flat Val
Locomotives.

sized vent-holes. The inside of the main relief-ring is
vented to the exhaust-port.

The advantages of this design are that double port-openi
secured with an arrangement which does not require precis
ting, which automatically takes up wear, and which lets the
rise freely to relieve the cylinder—a property very useful whe
locomotive is "drifting", or running with the steam shu
further, a long valve can be used, if desired, with shorter st
ports. But since as much unbalanced pressure must be all
to insure tightness, as with an ordinary valve performin
same functions, and since there are two surfaces where fr
will act, it appears that this valve is, on the whole, not any
than an Allen valve with an equivalent relief-rig on its back.

(*h*) PLAIN PISTON-VALVES.—Examples of simple four-fur
valves, controlling one cylinder, have been given in Figs. 252
(high-pressure cylinder), and 261. The valves first chosen
for detailed illustration, Figs. 425 and 426, are from the loc

Digitized by Google

tive. In both cases there is a central body and two heads, held together by the valve-rod alone, and a bull-ring carrying two

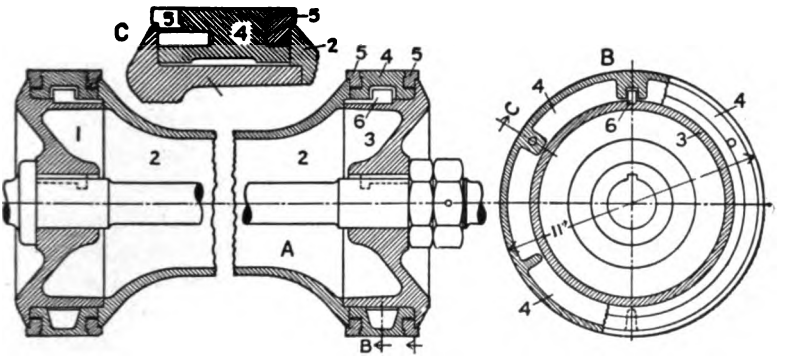

FIG. 425.—Valve with Closed Ends, for 20½"×28" Express Locomotive. Scales 1 to 8, 1 to 4.

snap-rings with projecting edges, to form the working-face at each end. Note how the bull-ring is kept from turning, by a key in Fig. 425, by a riveted pin in Fig. 426, as shown at B; and how pin-keys are likewise used to keep the ring-joints at a definite position, two ways of cutting the rings being shown at E and F in Fig. 426. With the further keying of the valve-heads to the

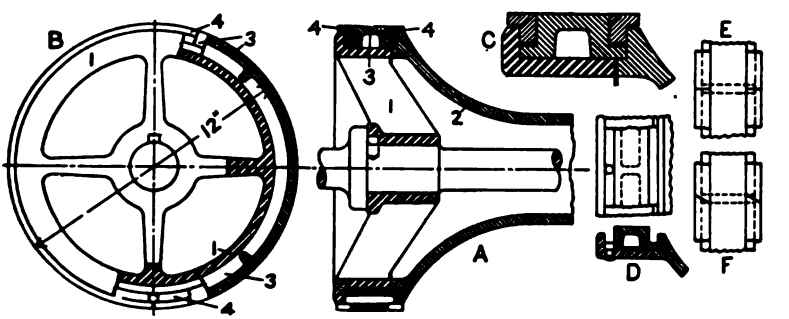

FIG. 426.—Valve with Open Ends for 20½"×26" Express Locomotive. Scales 1 to 8, 1 to 4.

rod, the location of the ring-joints is positively determined. In Fig. 425 the bull-ring is just fitted neatly to its slot, with some

Digitized by Google

freedom for self-adjustment, but in Fig. 426 it is tightly fitting closely upon the head and serving to hold the latt with the valve-body. Rings resembling those in Fig. 2 are used in the first valve; but the shoulder has so much that it is evidently intended to confine the ring in case age, rather than as a restraint against undue expansion nary running. Both valves are of the inside-admission t there must be an exhaust-passage at each end, the two below the exhaust-nozzle, within the saddle-casting. sage through the valve in Fig. 426 helps to equalize the pressure in the two ends of the valve-chamber, but is r enough to carry the whole current of steam as in some ments.

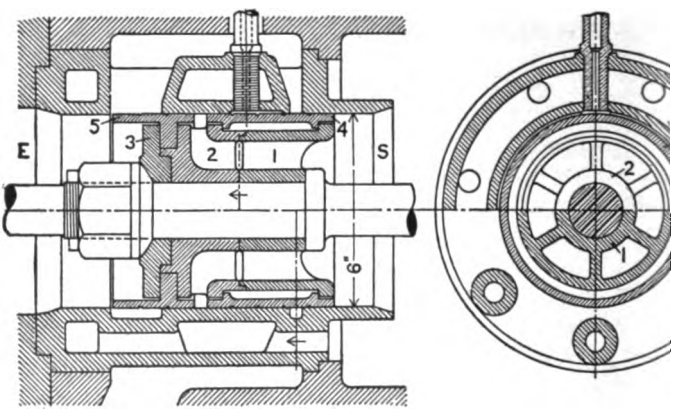

FIG. 427.—Solid-faced Valve, for German Locomotive using Superheate Scale 1 to 6.

Small Solid-faced Valves.—The use of ordinary cast-iro ing-rings to make piston-valves tight is very common—as Figs. 255, 258, 435, etc. Small valves, up to six inches in di or a little more, are often made solid, resembling the two-fa valve in being just loose enough to move easily, without p ting leakage. An entirely simple valve of this type is sh Fig. 252, another of more complicated form in Fig. 434. half of a solid-plug valve used with superheated steam is

Digitized by Google

in detail in Fig. 427, where the working-face is made up of two light shells, held in a head formed of three pieces recessed together.

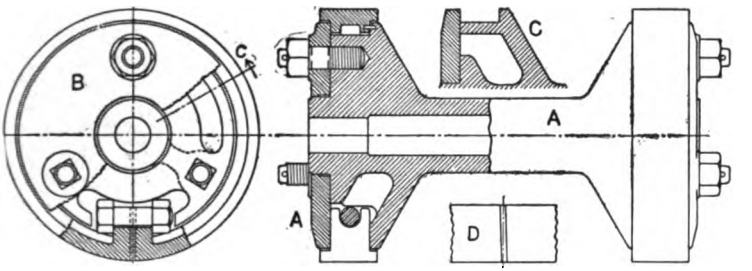

FIG. 428.—Valve with Adjustable Face-ring, Detail from Fig. 260. Scale 1 to 6.

The shells are grooved to hinder leakage, and the oil for lubrication is applied directly to the valve, through the pipe at the top.

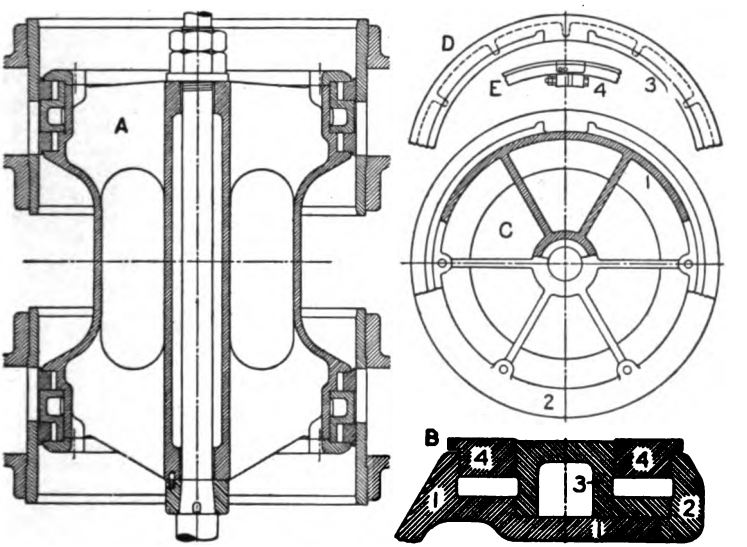

FIG. 429.—Large Piston-valve, of the Best Marine-engine Type.

To insure uniform heating, the valve-casing is made hollow and is open to free circulation of the live steam. As regards its action,

Digitized by Google

this valve more properly belongs in Art. (*j*), since it permit double admission. Note that there are no bridges across th ports, the hollow struts which join the several sections of th bushing not serving as guides for the valve.

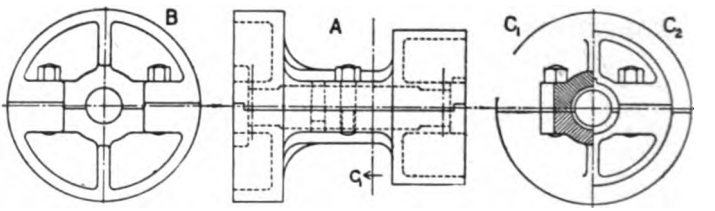

FIG. 430.—Small Valve Divided Axially, American Engine Company.

(*i*) ADJUSTABLE VALVES.—The valve with snap-rings is n altogether satisfactory, either as to tightness or to ease of mov ment. The solid valve, if it can be kept tight, is decidedly pre erable in many ways; and a number of adjustable valves hav been devised and extensively applied, especially in marine engine Fig. 428 shows a simple arrangement of valve-body and followe plates, having a face-ring clamped at one joint, with a distanc

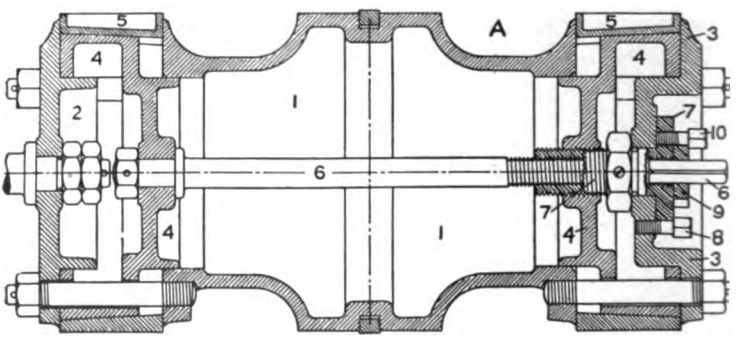

FIG. 431.—Valve with Wedge-adjustment, Detail from Fig. 254, Low-pressure Cylinder.

piece to which thin liners can be added as the valve wears loos In Fig. 429 is given a large marine-engine valve, with an arrang ment of working-face best shown by the enlarged section at

Digitized by Google

The detail of the ring-joint is seen at E, and the way that space is provided for this joint at C and D. In view C the bull-ring 3 is removed, and we see the recess for the joint of the inner ring; while D shows how it is made for the outer ring. This large hollow valve furnishes ample passage through its middle part, so that a steam-connection need be made at only one end of the valve-chamber.

Fig. 430 shows a small solid valve, for a horizontal high-speed compound engine arranged like the locomotive in Fig. 257—only one half (one end) of the valve being given. It is designed on the idea that the wear of the valve and seat is due wholly or chiefly to the weight of the valve; so that dividing the valve lengthwise in a horizontal plane, and inserting thin copper liners as needed, will enable a good fit to be maintained.

Expansible Valves.—Another type of device is well represented by Fig. 431, where the rings 5, 5 are set out by cone-wedges to any desired degree of tightness. The top of the valve, as it stands in the vertical engine, is here at the right; and both working-faces can be adjusted from this end, without removing the valve from its casing. The hollow threaded spindle 7 can turn in the head 3 without lengthwise movement, and can be locked by the cap-screw 8; while the long spindle 6, threaded into 7, can be locked with 7 by the screw 10. The lower cone 4 is moved by turning 6 in 7, the upper cone 4 by turning 6 and 7 together. The ring-joints both come at the upper edge of view A.

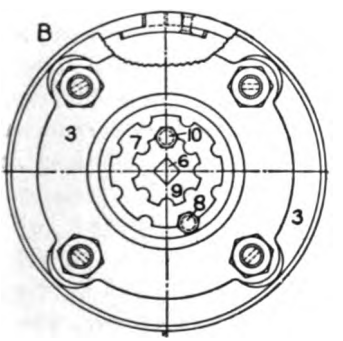

FIG. 431—*Continued.*

Adjusting the Valve-casing.—An interesting inversion of relation is seen in Fig. 432, where the bushing is adjusted instead of the valve. This bushing is slipped into place from the exhaust side (the left in view B), and the ring which holds it is fastened with cap-screws. The valve has three "fingers" which project inward from the steam edge, fitting closely

Digitized by Google

to the valve-seat; and one of these covers the gap at the joint in the bushing. When the screw-cap above the end of the clamp-screw is removed, the latter can be turned with a small socket-wrench, and the adjustment made with steam turned on if desired.

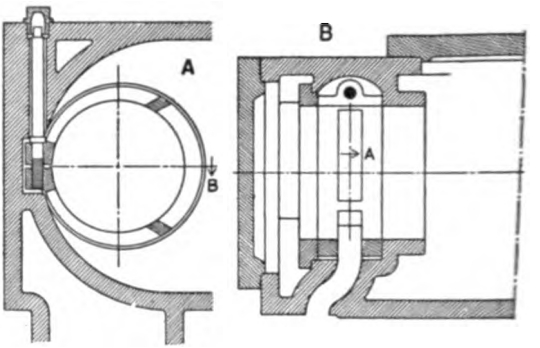

FIG. 432.—The McIntosh & Seymour Adjustable Valve-bushing.

A Self-adjusting Valve.—A device which automatically adjusts and clamps itself is shown in Fig. 433, the underlying principle being the same as in the piston-packing arrangements at XV. and XVI. in Fig. 280. There are first the two snap-rings 1, 1, with lap-plates at their joints as shown at the top edge of this sectional view. With these is combined an expansible face-ring 2, which can, however, easily be omitted, with change to the form at B. The rings 3, 3 are solid; and between them is a wedge-ring 4, which like the packing-rings has a lap plate at the joint. Through a number of drilled holes, live steam is admitted back of the whole system of rings: when first turned on, it pushes out the rings 1, 1, till they make good solid contact with the casing; then ring 4 wedges 3 and 3 apart, holding 1 and

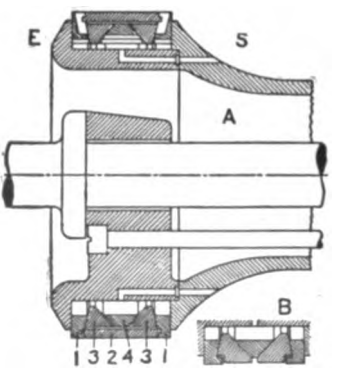

FIG. 433. — American Balance-Valve Company's Semi-plug Piston-valve.

Digitized by Google

1 against any further tendency to expansion. The light screw below the valve-rod is to hold the parts together when the rod is removed.

(*j*) MULTIPLE-PORTED PISTON-VALVES.—Sometimes the piston-valve is made like the Allen valve in Fig. 410. An example is given in Fig. 434, where the valve has inside admission. This also shows a method of construction sometimes used for small valves, the two cast-iron "pistons" being joined by a piece of common wrought-iron pipe, screwed in—which greatly simplifies the work of the foundry in casting the valve.

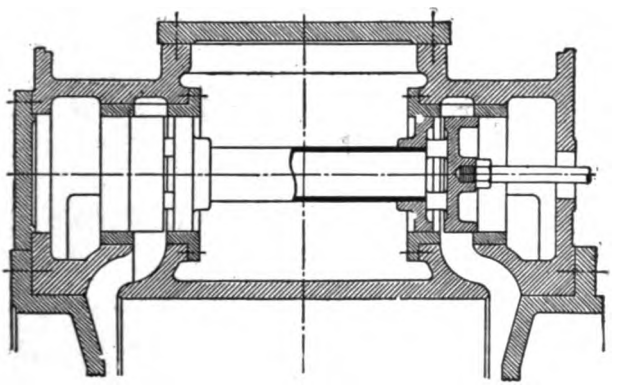

FIG. 434.—Piston-valve of the Allen Type.

Another double-admission valve has already been shown in Fig. 427: and a large valve, for the low-pressure cylinder of a two-cylinder compound locomotive is illustrated in Fig 435. The vertical section A shows clearly the action of the valve, while the horizontal section in two planes at B and the cross-sections at C bring out the form of the casting and show how the extra steam-passages open toward the ends of the valve and the extra exhaust-passages toward the middle, without interference.

(*k*) COMPOUND VALVES.—This name seems the most suitable for valves which control the steam-distribution in two cylinders—such valves being possible in engines where the two pistons move together or are connected to cranks at 180 degrees. Examples have been given in Figs. 254, 255, and 258: and another, for a

Digitized by Google

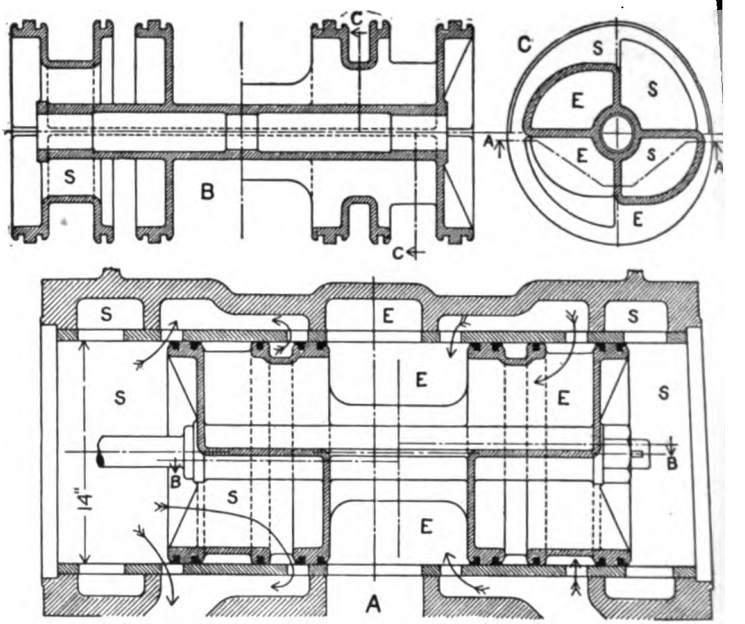

FIG. 435.—Double-ported Valve for 35″×26″ Low-pressure Cylinder Compound Locomotive. Scale 1 to 12.

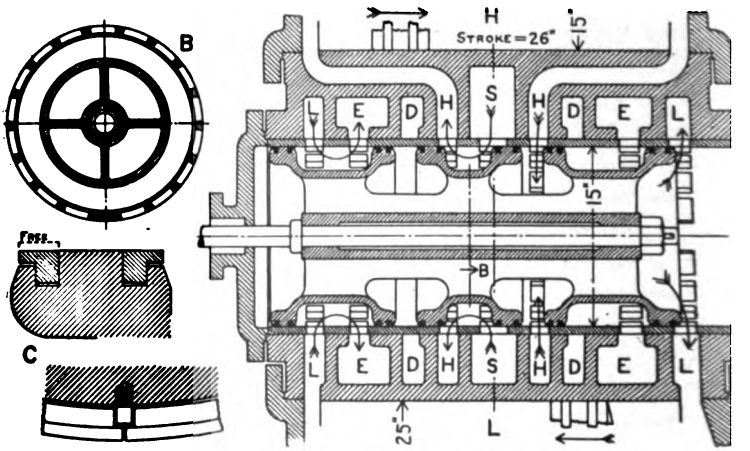

FIG. 433.—Valve of Vauclain Balanced Compound Locomotive. Scale 1 and 1 to 3.

Digitized by Google

locomotive much like Fig. 256 in cylinder-arrangement, but with cranks opposite, is fully shown in Figs. 436 and 437.

This locomotive has two high-pressure cylinders inside the frames and two low-pressures outside, with the two cranks at each side set opposite, and these pairs quartered, as in Case B, § 40 (*k*). The valve is shown at about its extreme distance toward the left. Its middle "spool" controls the H.P. cylinder, with steam inside and exhaust outside. The central cavity of the

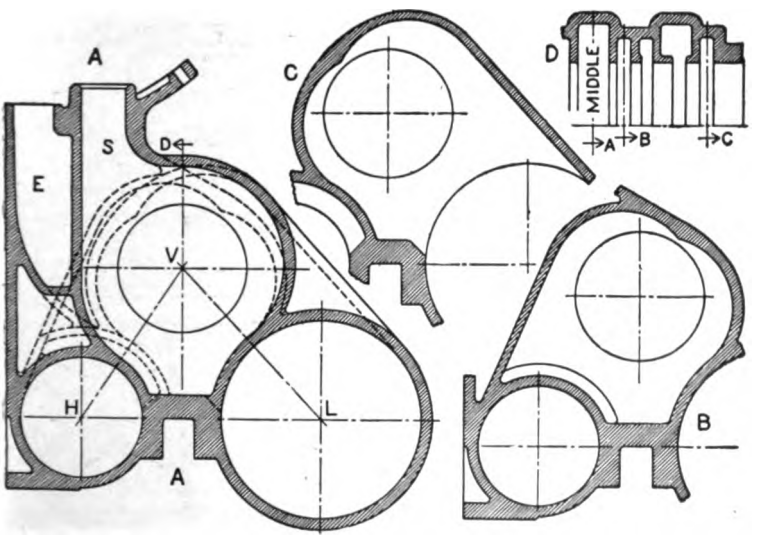

FIG. 437.—Sections of Cylinder and Valve-chamber of Vauclain Locomotive—with Fig. 436. Scale 1 to 16.

valve—that is, the whole valve-chamber—acts as a receiver between the cylinders, the working-faces at the ends of the valve controlling the L.P. cylinder. Then the faces at the inner ends of the outer spools do not control any ports, but simply serve to enclose the pockets through which exhaust takes place; and the chambers marked D, outside the valve-bushing, are mere dead spaces, hollowed out in the casting. Details of the rings are shown at C, and the superiority of rings of this type over the plain rectangular rings in Fig. 258 is apparent, in that they furnish better working-

Digitized by Google

edges and are more definitely pressed outward by the steam behi the projecting lips.

Sections of the cylinder-casting are given in Fig. 437, vie A, B, and C being made by cutting-planes located as shown at that is, A is a middle section, B follows the high-pressure pc and C the low-pressure port. In Fig. 437 half-sections along ' and VL are swung into one plane. It is evident that the clearan volumes are quite large.

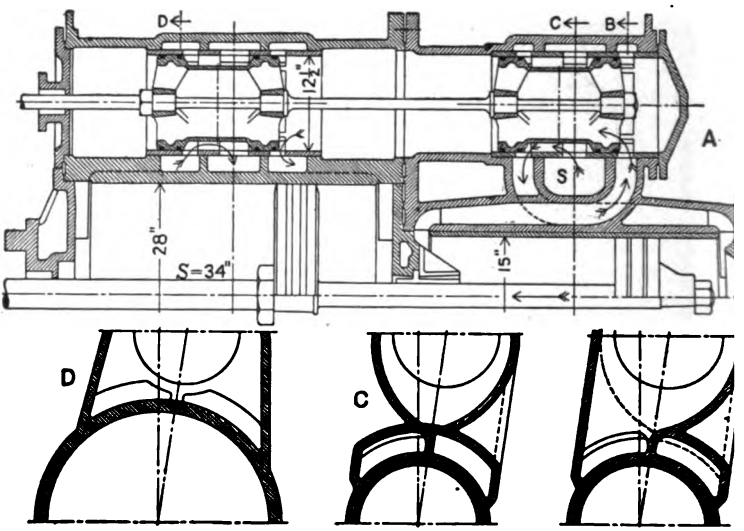

FIG. 438.—Valves of a Tandem-compound Locomotive. Scale 1 to

An interesting arrangement in which two complete valve combined on one valve-stem, so as to control two cylinders the same movement, is shown in Fig. 438. Since steam be admitted to both front ends or both back ends at the time, it would seem proper, at first sight, to use two valv the same type, either both direct or indirect. Actually, a view to simplicity in the steam-passage and receiver be the cylinders, it is better to use valves of opposite type to cross the high-pressure ports. There is plenty of roo these ports; how they pass each other is clearly shown b

Digitized by Google

ns at B and C; and the only drawback to this arrangement increased clearance in the high-pressure cylinder. It is ole that the valve-axis be as near the cylinder-axis as pos- wherefore the low-pressure port is crowded against the er in the middle, but spreads o its full thickness on each side e valve-chamber, as shown by on D.

this connection it is most ap- iate to illustrate the Willans cen- alve engine, which is shown in its ound form in Fig. 439. The -rod is a tube of considerable within which slides the multiple- valve. This valve is driven fixed eccentric, forged upon crank-pin, so as to receive proper relative motion. Of umerous pistons on the valve- only the two marked V_1 and ally act as valves to control low of steam through ports in casing; the others are merely ble partitions, dividing this -chamber so as to form the d passages from port to port. er, the valve proper controls admission and the two exhaust- s; cut-off is effected by the g of the ports marked P_1 and s they slide into the packing- in the cylinder-heads — and the full speed of the piston to these ports, cut-off is very . For symmetry of force-action, connecting-rod is in duplicate, a rod being placed on each of the eccentric-rod. The guide-piston G_2 serves as cross-

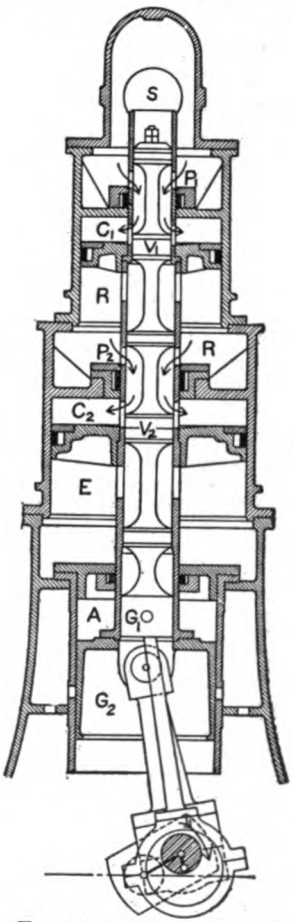

FIG. 439.—Willans Central Valve.

Digitized by Google

head; and to insure that there shall always be a downward force upon the connecting-rod, air is compressed in the chamber A. At the very high speeds usual with this engine—400 to 500 R.P.M. in the smaller sizes—the large moving mass will develop very great inertia forces; and the clearances are so small that but little steam-cushion is permissible. Two or three units like Fig. 439 are placed closely side by side, acting on one shaft; and frequently each unit is a triple-expansion engine. The peculiar action of the receiver in this engine is discussed in § 69 (*m*).

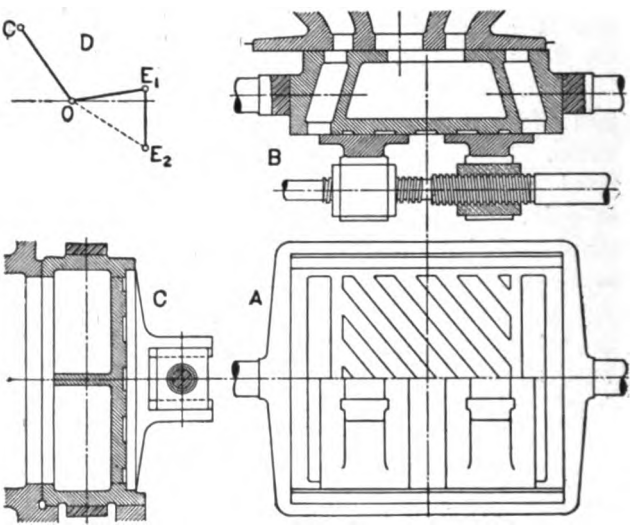

FIG. 440.—Detail of a Meyer Valve.

(*l*) DOUBLE VALVES.—A good example of the Meyer valve is given in Fig. 440, shown with more detail than the one in Fig. 398. A novel feature of this design is the corrugation of the back of the main valve in gridiron fashion, which gives the steam free access to the bottom of the cut-off slides, and thus prevents these from being subject to an unbalanced pressure during their idle movement. The valves are drawn in positions corresponding to the crank-eccentric diagram at D.

Fig. 441 shows a double valve of the piston form, similar in

Digitized by Google

general idea to that in Fig. 253, but with the inner valve formed so as to give double admission—this valve being controlled by a shaft-governor. The design has a number of interesting details, in the construction of the main valve, and in the device for adjusting the laps of the cut-off valve by moving one of the pistons on the rod.

So far we have seen two types of the double-valve gear, the Meyer, in which the laps are changed by moving two short slides apart or together, and the other type, without a convenient distinctive name but exemplified in Figs. 404, 405, and 441, where the rigid second valve is moved by a changeable eccentric. Another type, which secures variable lap with a solid valve, is the Rider,

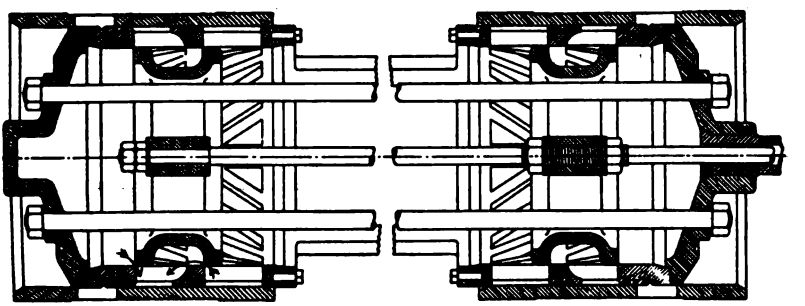

FIG. 441.—Double Piston-valves, for 44″×48″ Cylinder of Rolling-mill Engine—Wm. Tod Company. Scale 1 to 18.

well represented by Fig. 442. Here the ports in the back of the main valve are made oblique, which gives the casting quite a complicated form, but enables the lap to be changed by simply moving the cut-off valve sidewise. In view A, the right half of the riding valve is removed, to show the main valve more clearly: and it appears that the idea of providing a bearing-surface for the second valve only near the ports is here carried out much more fully than in Fig. 440. The arrangement for giving the expansion valve its sidewise displacement is clearly shown in views B and C: and it is obvious that this device, requiring only a small angular movement of the valve-rod, can be much more easily placed under the control of an automatic governor than can the Meyer gear.

Digitized by Google

The Rider valve is quite often given the piston form, the oblique ports then becoming helical; this complicates the main-

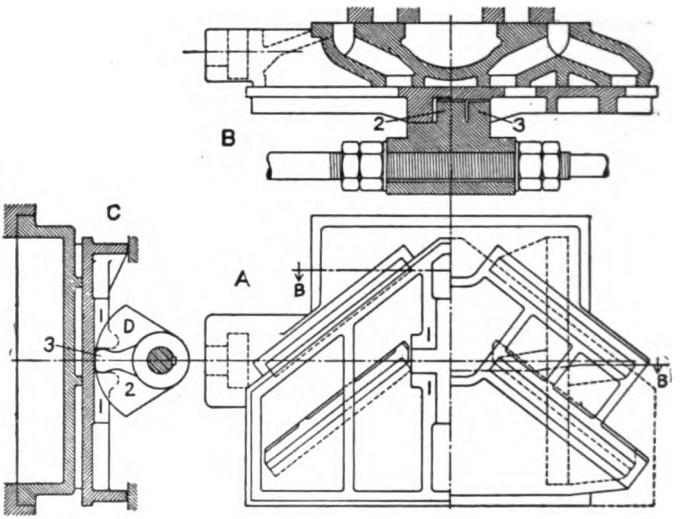

FIG. 442.—Rider Valve with Flat Seat—German Design. Scale about 1 to 10.

valve casting, but otherwise is a simple adaptation of Fig. 442, with a great gain in the balancing of the valves.

§ 55. Valve-gear Details.

(*a*) THE ECCENTRIC.—In its more usual form, this piece is the pin of a short crank, enlarged into a disk big enough to go around the shaft. We shall here consider fixed eccentrics, as distinguished from those carried by shaft-governors A general view of practice, well represented by the examples given in Figs. 443 to 449, may be summed up in the following statements:

Form of the Eccentric.—The wider side of the disk or "sheave" is very much in the form of a wheel, with one or more arms, Fig. 368 showing an extreme case. The plainest form of rim and hub is seen in Figs. 443 and 444; in Figs. 445, 447, and 448 there is

Digitized by Google

ral stiffening-web; while a full side-web is used in the double trics, Figs. 446 and 449.

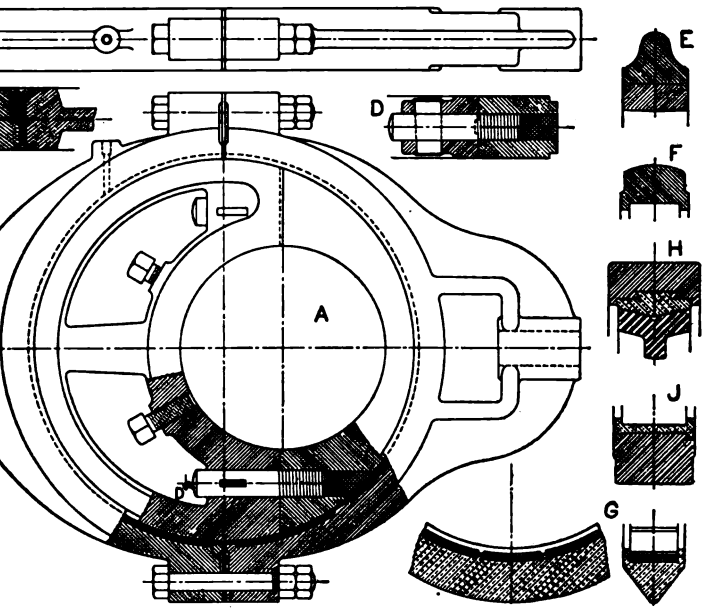

443.—Eccentric for Corliss Engine, to fit shaft in Fig. 312 I. Scale 1 to 14. Sketches E to J, various sections of the eccentric-strap.

Dividing the Eccentric.—When the eccentric is to be placed the main engine-shaft, it is nearly always made in two es, held together by bolts with nuts or keys. Usually the is recessed, although sometimes fitted bolts are used, as ig. 445: the most positive joint has the tongue-and-groove ing radially, as in Figs. 443 and 444. The clamping-bolts t be well secured against working loose; in Fig. 443, for ance, the key is driven in hard, then lightly riveted.

Material.—For stationary engines and locomotives the eccentric ade of cast iron, except that sometimes the smaller "half" wrought metal, for the sake of strength; but in the higher le of marine engines, cast-steel eccentrics like Figs. 448 and are very common. Occasionally, especially in very quick-

Digitized by Google

running marine engines, the eccentrics are forged solid with the shaft—which reduces rubbing-speed and saves weight, but is costly.

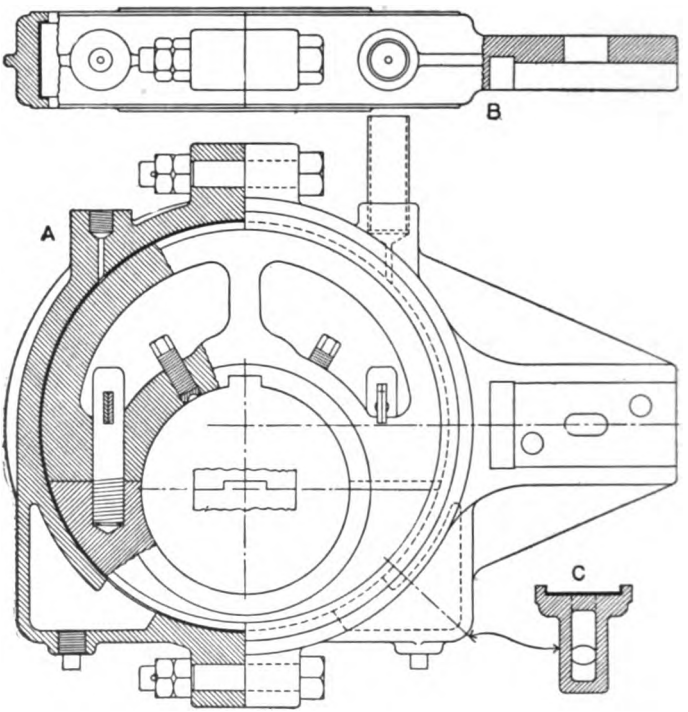

FIG. 444.—Locomotive Eccentric with Cast-steel Strap, Detail from Fig. 366. Scale 1 to 8.

Fastening the Eccentric.—In the link-motion the eccentrics are usually keyed upon the shaft, because the conditions of service are severe and a positive fastening is needed. With the easy-running Corliss gear, set-screws give sufficient security, accompanied by flexibility. Ease of adjustment is especially desirable where the exhaust-valves are separately driven and the engine is liable to such a change of condition as from open exhaust to running condensing. The eccentric-hub is bored to an easy close fit, so that it can be moved upon the shaft, but will have no lost motion. When set-screws are used along with a key, as in Fig.

Digitized by Google

444, they serve to take up all slack, besides preventing endwise movement. One reason for not using set-screws alone where the eccentric must be very strongly held is, that if they are screwed down very hard they are likely to distort the sheave.

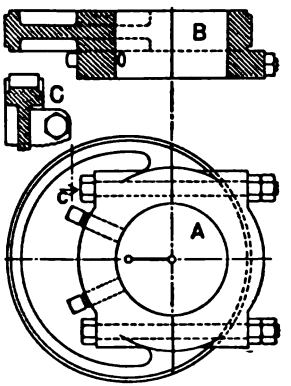

FIG. 445.—Eccentric with Side-hub, for Exhaust-valves of Simple Engine like Fig. 215.

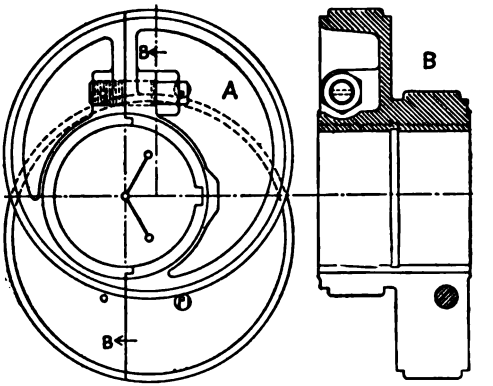

FIG. 446.—Double Eccentric, for Locomotive, see Valve-gear in Fig. 455.

Adjustable Eccentrics.—For large engines a simple set-screw fastening is rather crude. A better type of arrangement, frequently used, is represented by Fig. 447: this is taken from a large vertical Corliss engine which has its valve-gear driven by a 6″ lay-shaft instead of the 26″ main shaft—the two being connected by an intermediate vertical shaft with spiral gearing. The drawing shows clearly how the eccentric is clamped to the fixed hub or clutch 1, by studs which pass through oblong slots. The

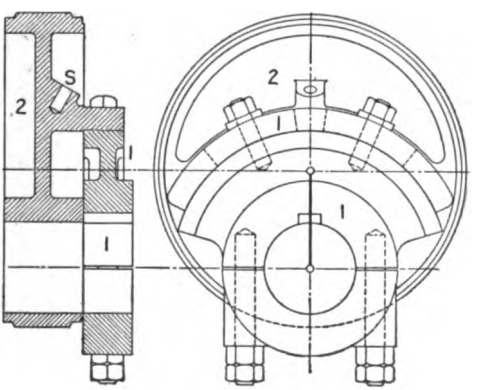

FIG. 447.—Adjustable Eccentric, Clamped upon Fixed Hub.

Digitized by Google

socket S is to receive a bar, by which the eccentric can be easily moved when the bolts are slacked off. Sometimes in the link-motion one eccentric is keyed fast and the other bolted to it, with oblong holes, after the same manner.

Bearing-surface.—This is nearly always cylindrical, with recesses at the edges to make room for the collars on the strap; very rarely, the collars are on the eccentric itself. A special type (German) is shown at H in Fig. 443; and where the rocker-arm works in a plane at right angles to that of the eccentric, as in Fig. 255, the eccentric-face must be spherical. Both these latter arrangements make the full width of the face effective as bearing-surface. Note how the hole under the clamping-stud is filled with babbitt metal, in Fig. 443, to make the surface continuous.

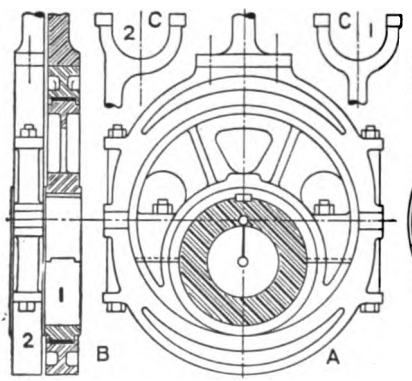

FIG. 448.—All Cast-steel Design, recent U. S. Battleship. Scale 1 to 25.

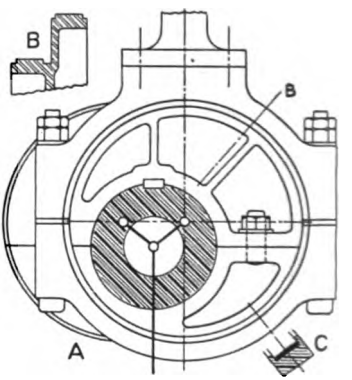

FIG. 449.—Steel Eccentrics Cast together, Forged Straps, French Battleship. Scale 1 to 25.

(*b*) THE ECCENTRIC-STRAP.—In general form this rod-end bearing is analogous to the marine connecting-rod end in Fig. 308; in detail it varies as to form and material, manner of fastening the rod to it, construction at the joints, kind of rubbing-surface, and provisions for lubrication. Cast iron is commonly used on stationary engines, typical cross-sections being shown at E and F, Fig. 443, and a good example at C. Cast steel prevails where weight must be kept down, as in Figs, 444 and 448. For large,

Digitized by Google

high-speed marine engines, the straps are frequently of forged steel, as in Figs. 449 and 450, in which case simplicity of form is highly important; while small marine engines often have straps of brass or bronze, like Fig. 443 G.

Rod-fastenings.—A crude arrangement, used with a round rod in small engines, is to tap the hub on the strap and screw the rod into it, with a jam-nut. Far better is the connection in Fig. 443, easier to make and put together, and facilitating adjustment of rod-length. On locomotives, where there is considerable possibility of failure of lubrication at the eccentrics, the rods must be very stiff; hence the use of a deep rectangular rod, strongly held in a stout nose on the strap, as in Fig. 444. Another type of bolted joint has the bolts in the plane of the eccentric and perpendicular to the rod-axis, a rather peculiar and special example being given in Fig. 451. The T-head fastening, very common in marine practice, needs no comment.

Strap-joints.—The simplest form is the plain flat joint in Fig. 444; but stiffness is more completely assured by the use of narrow fits, as in Fig. 443, because there is always a possibility that a continuous flat surface may be just a little high in the middle. Very seldom is the joint recessed to make the halves match positively, because it is an easy matter to make the bolts act as dowel-pins. Usually there are liners or distance-blocks at the joints, and with forged straps these are sometimes quite long, as in Fig. 450. A very special arrangement is shown in Fig. 451: at one side the halves are practically hinged together, at the other a stout stop-screw determines how closely they shall approach; so that exact adjustment can be made very quickly, and much more easily than by changing or filing down

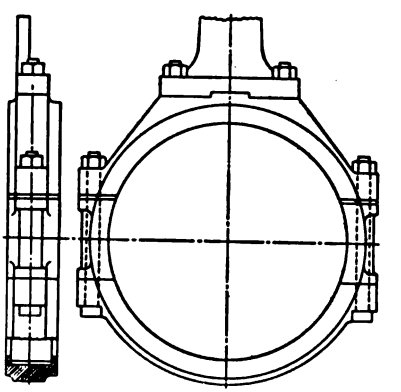

FIG. 450.—Forged Steel Strap for Large Cruiser. Scale about 1 to 27.

Digitized by Google

liners. Further, the compressive effect of the bolts is concentrate at the middle of the joint (on just the opposite principle to tha in Fig. 443), with the idea of not distorting the strap by an possible force-action in the joint.

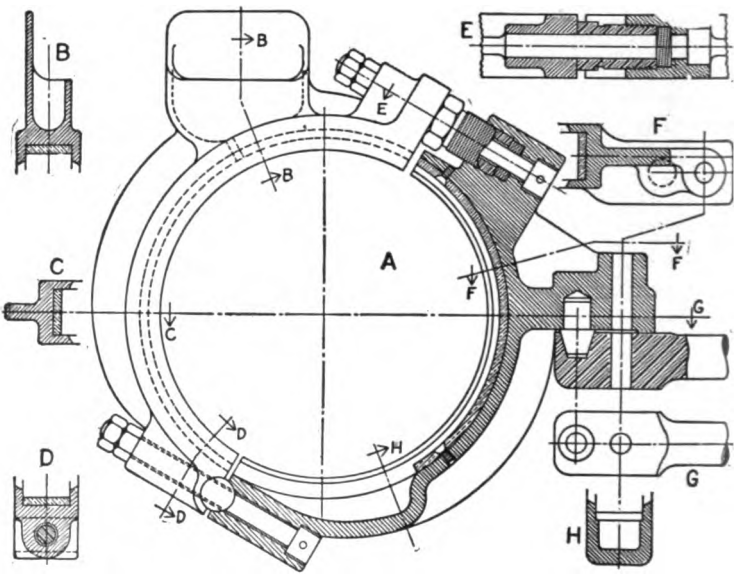

FIG. 451.—Adjustable Eccentric-strap from Engine in Fig. 205. Scale 1 to 6 for 12″×12″ Engine.

Rubbing-surface and Lubrication.—Not infrequently, a simpl bearing of cast iron on cast iron is or has been used; but in all th better grades of practice the strap is lined with some anti-frictio metal. In Fig. 444, tin is self-soldered upon the steel surface, jus as on the cross-heads in Figs. 286 and 289; Figs. 443 A and G show the detail of babbitt linings cast in pockets; while separate shells fastened into the strap, are shown by Figs. 443 J and 451.

To supply oil in Fig. 443, an ordinary sight-feed drip-cup i screwed into the boss on the strap. Marine-engine straps, suc as Figs. 448 to 450, have oil-pipes like those on the connecting rods, coming from cups fastened well up on the eccentric-rods On small high-speed stationary engines, oil is supplied from a

Digitized by Google

fixed cup or pipe, and received by some such device as the catch-cup in Fig. 451. In Figs. 444 and 451 we see pockets formed in the lower part of the strap, to hold a supply of oil. On Fig. 444, the boss at the upper left-hand corner is for a grease-cup, this lubricant remaining in reserve against overheating.

(*c*) VALVE-GEAR RODS.—The general form of the eccentric-rod and the other connecting-links in the valve-gear can be pretty clearly seen on a number of the pictures in the first part of Chapter VIII., particularly in Figs. 201, 208, 210, 212, 215, 217, and 221; as also on the general drawings of valve-gears at Figs. 366, 368, 391, 394, and 455.

On large engines, the eccentric-rod usually tapers from the strap toward the other end; and long connecting-rods, used in gears like the Corliss, often taper from the middle toward the ends. In the link-motion, especially on locomotives, the rectangular cross-section for the rod-body is very common; elsewhere, the round rod is almost universally used.

Rod-ends.—The joints in the locomotive valve-gear are nearly always of the solid, non-adjustable type, with case-hardened bushings on hardened pins; then whatever the form of the end, it is forged solid with the body of the rod—see Figs. 366, 367, and 455. The same type of bearing has been used on some stationary engines; but the great majority of designers have preferred arrangements which permit the taking up of wear—using therewith one of the harder bearing-metals, generally brass. All the types of connecting-rod ends have been adapted to the valve-gear: thus Fig. 452 I. shows the old-fashioned key-and-gib joint, while the bolted strap is seen on Fig. 217; the solid, mortised-out end like Fig. 304 is sometimes used; Fig. 368 has the half-solid marine end like Fig. 308; and Fig. 448 shows eccentric-rod forks shaped for square-box marine ends, as in Fig. 309. On stationary engines, however, the separate head, screwed on the rod and locked by a jam-nut, is by far the most common arrangement; this head either being solid, with a half-box set up by a screw as in Fig. 452 II. or by a wedge-key as in Fig. 460, or else having the "marine" form shown in Fig. 452 III.; usually the head is all of brass. When facility for rod-length adjustment is desired,

Digitized by Google

the ends of the rod are threaded right and left; and provision is then usually made for taking hold with a wrench, either by flat

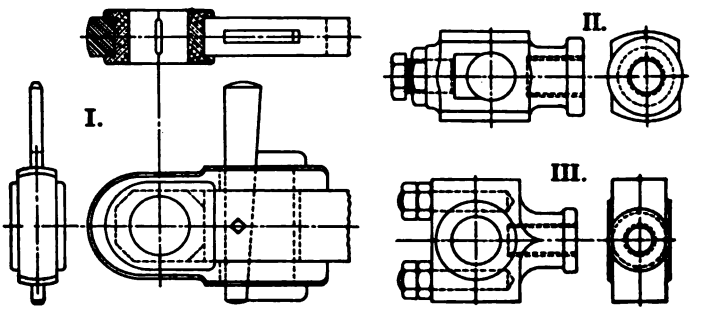

FIG. 452.—Valve-gear Rod-ends.

ting the rod as in Fig. 460, or by forming a hexagon "head" upon the body of the rod as in Fig. 201.

(*d*) ROCKERS AND VALVE-ROD SLIDES.—The name "rocker" or "rocker-arm" is applied to any oscillating lever used to connect the successive rods in a valve-gear. Absolutely the simplest form is seen in Fig. 212, where the short rockers at the base of the governor serve merely to guide the rod-joints, without any effect upon the motion transmitted. Very common in Corliss gear is the type in Fig. 210, which gives the rod-movement a sidewise displacement in the plane of the mechanism, with change of magnitude, usually an increase. Analogous to this is the bent lever or bell-crank rocker on Fig. 208. The exhaust-valves in Fig. 215 are driven by a plain reversing-rocker, pivoted at or near the middle. For a direct transfer from one plane to another the U-shaped device seen on Fig. 201 is most often used; the horizontal lever in Figs. 2 and 4 serves the same purpose, but complicates the rod-joints by combining movements in planes perpendicular to each other. Most complex of all is the Z-shaped locomotive rocker, shown in Fig. 366, which transfers in two directions and reverses the rod-movement.

The U rocker in Fig. 201 is of the built-up type, with two cast-iron arms keyed to the shaft, and stiffened by making the pins on the ends of a lighter shaft which runs from one arm to

Digitized by Google

the other. In Fig. 453 the main rocker is of the simple keyed form, that for the cut-off valve is all of cast iron, except that it is clamped upon a hollow shaft in which the first shaft has its bearing. The pins at E_1 and E_2 are carried by the catch-blocks on the rods instead of by the rockers, these blocks being made on

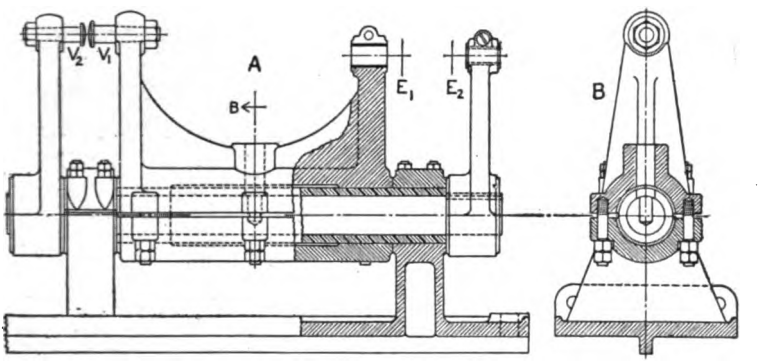

FIG. 453.—Double Rocker, to Drive the Valves in Fig. 440.

the principle of Fig. 483 III. Note the hole for the starting-bar, best shown in view B, so made that when the bar is inserted the two rockers are locked together—both valves being released from the control of the eccentries and moved by hand in stopping and starting the engine.

Valve-rod Slides.—Quite often the valve-rod is coupled directly to the rocker, as in Figs. 201 and 366, its own flexibility and the small departure of the pin from a straight-line path permitting this. With more rigid construction, a plain knuckle-joint is sometimes formed just outside the stuffing-box, with nothing but its own stiffness, and perhaps a little support from the packing, to hold the valve-rod in line. A small hollow slide-block or cross-head, suitably guided, may be formed around this joint; but the solid block with a pin projecting from the side of it, as in Fig. 454, is more usual. An advantage of this arrangement is that it can give all the offset needed when the eccentric is close to the bearing, Fig. 206 presenting an example.

Fig. 454 I. belongs to the valve-gear in Fig. 455, A being a

Digitized by Google

front and B a top view; 1 is the rocker and 3 a valve-rod extension, coupled on by a key-and-socket joint as in Fig. 366. Upon this rod is cast a phosphor-bronze bushing S, which works in a small guide fastened to the main guide-yoke. Drawing II. shows the slide-blocks for a Meyer gear like that in Fig. 398, with the form of the guide-bracket. At III. and IV. are given sketches

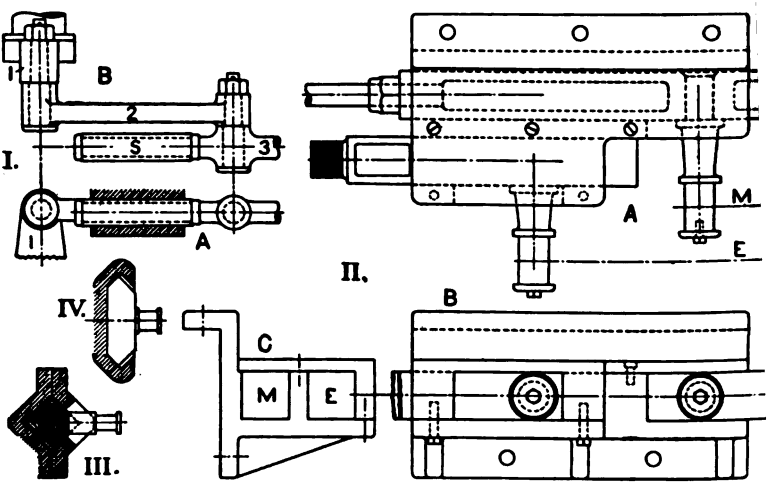

FIG. 454.—Valve-rod Slides.

of another type of block, which combines facility of adjustment for wear with security against turning of the block—that is, which holds the axis of the pin definitely horizontal: III. would be adjusted by means of liners in the joint, IV. by putting them under the little facing-strips, which are screwed upon the block to form a part of the rubbing-surface.

(*e*) DETAILS OF THE LINK-MOTION.—Fig. 455 shows a locomotive valve-gear which is a decided improvement on common American practice, in that the suspension-rods 10, 10 and the extension-rod 7 are made double, taking hold on both sides of the link. This gives simpler stresses and better insures a uniform distribution of the pressure upon the pins. In view B enough of the eccentrics and of their rods is given to show the alignment, and the two sets of suspension-links, 10 and 8, are also swung

Digitized by Google

into the horizontal plane. Incidentally, this drawing shows a solid link, cut out of one piece, a very rigid form of the extension-rod which must get past the axle, and an unusual provision for lubrication. Not all of the oiling devices are here given, the rods 10 having cups fastened to them well toward the upper ends,

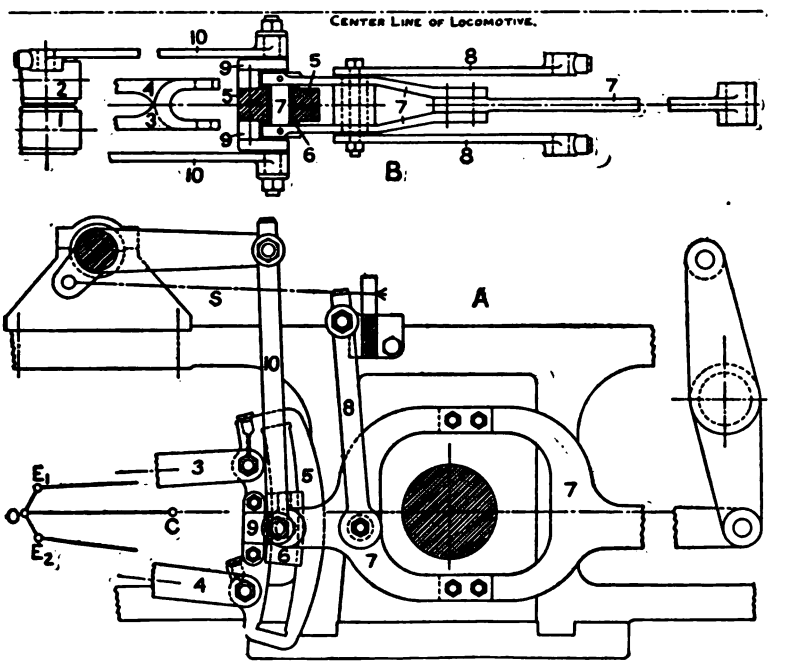

Fig. 455.—Locomotive Link-motion, Standard Penna. R.R. Design.

with pipes to the lower joints after the marine fashion; similarly, cups at the top of the loop in 7 supply the joint 7–8.

The Box Link.—Fig. 456 shows a link which is equivalent to the two-bar marine type—see Fig. 368—in having the rod-pins on the center-line and yet permitting the block to slide into the full-gear positions. View C shows how the halves of the link, with the end-blocks out, can be got into the solid jaws of the eccentric-rods, while D gives the form of the end-block. This enclosed form of link, seen in Figs. 391 and 394 also, is inherently

Digitized by Google

the most difficult to make, because two curved surfaces, required to be exactly alike, must be machined separately; while the two

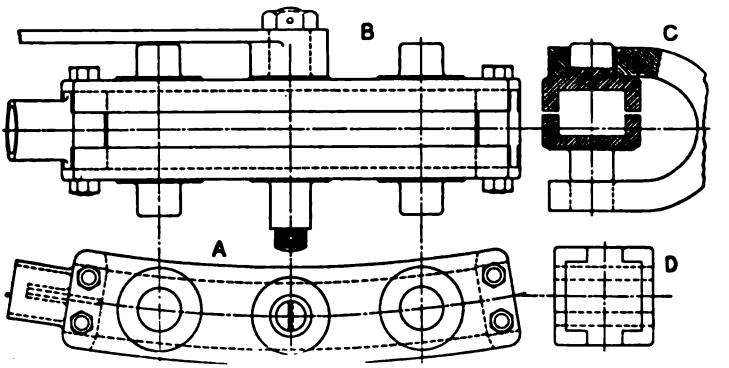

FIG. 456.—Enclosed or Box Link, from French Locomotive.

bars of a marine link can be clamped together and finished in the same operation. Sometimes the link is a solid curved bar, with

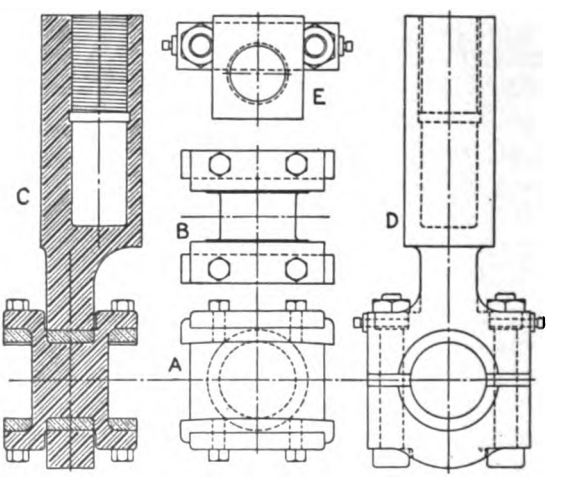

FIG. 457.—Block for Marine Link, with Valve-rod End.

the block surrounding it; but this is necessarily of the partial-gear type, like the one in Fig. 389 II.

Digitized by Google

The Marine Link-block.—A block like that in Fig. 368 is shown in detail by Fig. 457, together with a separate valve-rod slide; quite often, however, the valve-rod is continuous, an enlarged portion working in the guide-bracket, as in Fig. 368. Note how the body of the slide is drilled deeper than needed for the screwed joint, to diminish its weight. The block for Fig. 456 must be like this one in having the pin formed at the middle.

Marine-engine Valve-rod Guides.—From Figs. 233 and 234 can be got a good idea of the valve-rod guide used on marine engines, carried by an inverted A frame bolted beneath the cylinders. Especially strong guiding of the rod is necessary when two piston-valves are coupled to a wide cross-head, as in both the figures just referred to, for there is always the possibility that one valve will have a higher resistance than the other.

§ 56. The Corliss Valve-gear.

(*a*) A TYPICAL CORLISS GEAR, without special or novel features, is shown by Fig. 458, partly in skeleton outline; it is very much like that on the engine in Fig. 210, and belongs to the cylinder shown in Figs. 261 and 262, where the form of the valves may be seen. Besides the mechanism on the cylinder, we have here an outline of the crank-eccentric and of the rocker-arm, at A and B. Starting at the eccentric, we shall now consider in detail the form and action of this valve-gear.

(*b*) MOTION OF THE WRIST-PLATE.—By means of eccentric-rod 1, rocker-arm 2, and reach-rod or hook-rod 3, motion almost harmonic is given to the point H on the wrist-plate 4; and we may say that this piece oscillates in practically harmonic motion, conceiving its angular movement as determined by the linear movement of H. The reach-rod is not permanently connected to the wrist-plate, but merely hooks over the pin, so that the valves can be moved by hand, with "starting-bar" S, in starting and stopping the engine.

(*c*) NON-HARMONIC MOVEMENT OF THE VALVES.—Through the valve-rods 5 and 7 and the cranks 6 and 8 the valves are given an oscillation which is far from harmonic. Intentionally, the

Digitized by Google

opposite angular displacements of any valve-arm, from a mid-position determined by putting the eccentric at 90°, are made very unequal. This is clearly shown in Fig. 462, where the mechanism is drawn in this mid-position and the range of movement of each C-point is marked. The result sought and obtained is, that the valve shall have a wider and quicker movement in

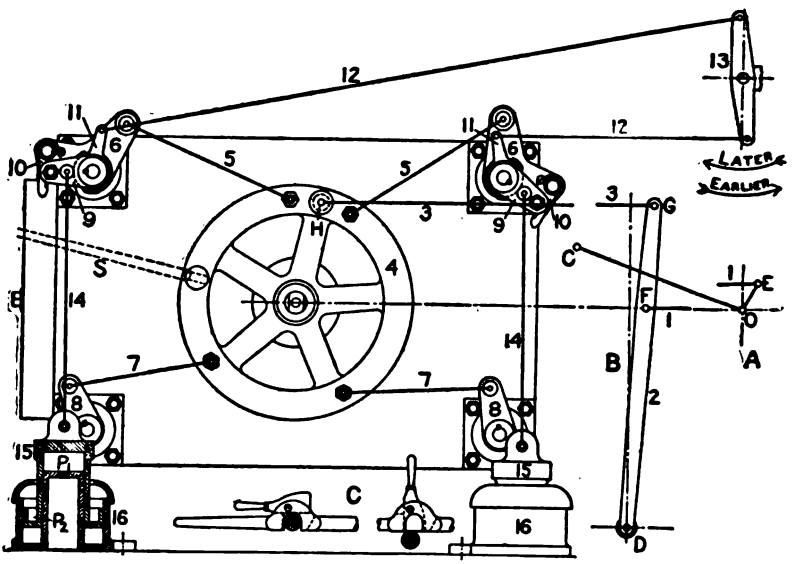

FIG. 458.—Corliss Valve-gear, Single-eccentric Type, with Full Wrist-plate.

1. Eccentric-rod.
2. Rocker-arm.
3. Reach-rod.
4. Wrist-plate.
5. Steam-valve rods.
6. Oscillating cranks.
7. Exhaust-valve rods.
8. Exhaust-valve cranks.
9. Steam-valve cranks.
10. Hook-claw.
11. Cam-ring.
12. Governor-rods.
13. Governor rocker.
14. Dash-pot rod.
15. Dash-pot plunger.
16. Dash-pot body.

the direction for opening, a shorter and slower movement on the closure side.

The principles lying back of this valve-drive are illustrated in Fig. 459, which is an outline of the mechanism for the head-end exhaust-valve, taken from Fig. 462, and shown in mid-position and at the two extremes. This four-piece mechanism has for its moving parts the oscillating levers or cranks OD and VC and

Digitized by Google

the connecting link or rod CD. If the two cranks in such a mechanism are to have similar and symmetrical movements, it must be arranged like that which consists of the rocker-arm, the reach-rod, and the wrist-plate (with the frame), on Fig. 458—the essential condition being, that when the driving crank is in mid-position, the other shall be parallel to it and the two perpendicular to the connecting-rod, or to a line of mean direction with which that rod remains very nearly parallel. With the wide departure from this condition seen in the Corliss valve-gear, the driven valve-crank has a motion very different from that of the driving wrist-plate.

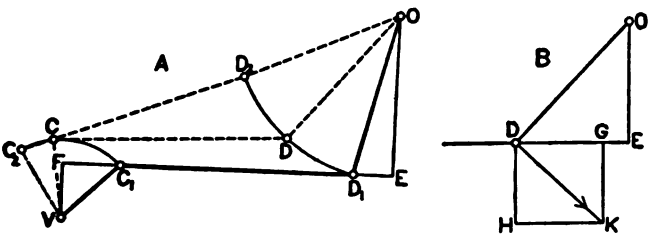

FIG. 459.—Outline of the Valve-mechanism.

A simple way to see how the velocities of these pieces compare at any instant is to note the property that if perpendiculars, as OE and VF, be dropped upon the center-line of the rod C_1D_1, an ideal mechanism OEFV can replace, for the instant, the actual linkage OD_1C_1V. With a given linear velocity transmitted along EF, the angular velocities of the cranks will be inversely as the radii OE and VF. Where OE is long and VF short, the valve turns rapidly; at the dead-point, just beyond OD_2C_2V in Fig. 459, where OD and DC are in line, the valve stands still.

That OE is the effective radius of the wrist-plate arm OD, to drive the rod DC, can be proven (if proof be needed) as at B in Fig. 459. Resolving the velocity DK of the point D into components along and perpendicular to the rod, we see that the transmitted component DG bears the same ratio to the radius OE that the total velocity DK does to OD: wherefore, a rod attached, for the instant, at E would be kinematically equivalent to the actual rod.

Digitized by Google

(*d*) THE CUT-OFF MECHANISM.—The releasing-gear for the head-end steam-valve is shown in detail by Fig. 460. Valve-crank 9 is merely dotted in, although the hook-pin P, carried by it, is drawn in full. At B the several cranks are shown as if swung into one vertical plane, which involves a distortion of 6; and to save overlapping the hook-claw or latch 10 is represented only by its center-line. All the valve-rods have heads like that on 5, and are adjustable in length by means of right and left threads, as are also the governor-rods 12 and the drop-rods 14. The

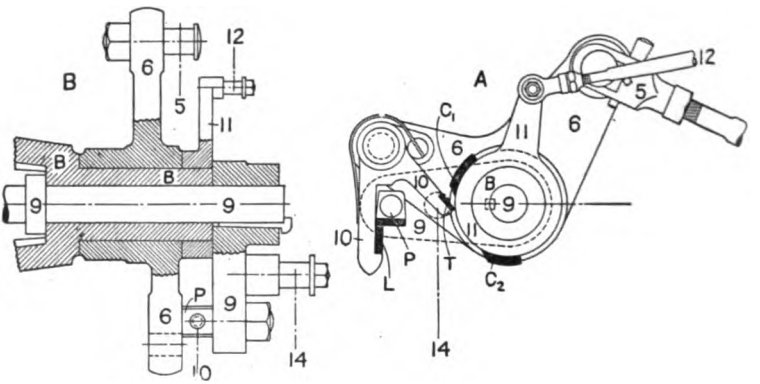

FIG. 460.—Detail of the Releasing-gear.

relative positions and the different motion-planes of the parts of the whole mechanism have already been illustrated in Fig. 261.

The oscillating crank 6 has its bearing on the valve-bracket or bonnet B. While it is turning toward the left, the valve is closed from the previous cut-off, and at rest; as 6 nears the limit of travel, the latch L slides over the catch-pin P, going just a little way past the engaging point. As the crank is pulled toward the right it turns the valve-stem with it, until the trip-arm T strikes the knock-off cam C_1 and L is pushed out so as to disengage P; whereupon the dash-pot pulls the valve quickly back to its rest-position, giving a sharp cut-off.

It will be noted that all the hooking and tripping surfaces are carried by small pieces of hardened steel, shaded on the figure,

Digitized by Google

which can easily be re-adjusted or replaced—being held fast by small bolts or screws not fully shown on the drawing. A section of one dash-pot is given in Fig. 458; it is of the double type, the inner plunger P_1 being mostly concerned with the vacuum-action, the annular plunger P_2 with cushioning. A fuller description and discussion of the dash-pot will be found in Art. (*p*).

(*e*) CONTROL OF THE CUT-OFF.—The manner in which the time of cut-off is determined by the governor, through movement of the cam-ring 11, is apparent from Figs. 458 and 460. An important point is that the trip-arm must strike the cam C_1 before the crank 6 gets to its limit of travel on the open side; otherwise the valve will not be released at all, and steam will be admitted through nearly the whole stroke. This means that the latest cut-off operation under control of the governor must begin a little while before the eccentric gets to its dead-point—rapidity of closure then depending upon the strength of the dash-pot. As will presently be shown, this places the limit of controlled cut-off at from 40 to 45 per cent. of the stroke in engines which have all their valves operated by one eccentric.

The Governor.—This is of the vertical fly-ball type for a Corliss engine, the one from the machine under consideration being shown in Fig. 461, where view A is taken from the cylinder, looking toward the shaft, while B is a view from the front of the engine—compare Fig. 210. The working of the governor-mechanism is self-evident, the sleeve 6 being moved up and down as the centrifugal force of the balls varies with reference to the downward pull of their own weight and of the balance-weight W; and the running-speed can be changed by moving W in and out along its arm. The dash-pot 10, with a loose-fitting piston working in oil, is of the drag or damping type, and is put on to keep the governor from responding too freely to small and irregular impulses. The governor-rocker 8 is the piece numbered 13 on Fig. 458.

Action of the Safety-cams.—In Fig. 461 the whole mechanism is drawn in the starting position (for the engine standing idle), with the arm L resting upon the stop-ring S. This gives the latest possible cut-off, without release, the trip-arm T, Fig. 460, just working between cams C_1 and C_2. The ring S, freely turned by

Digitized by Google

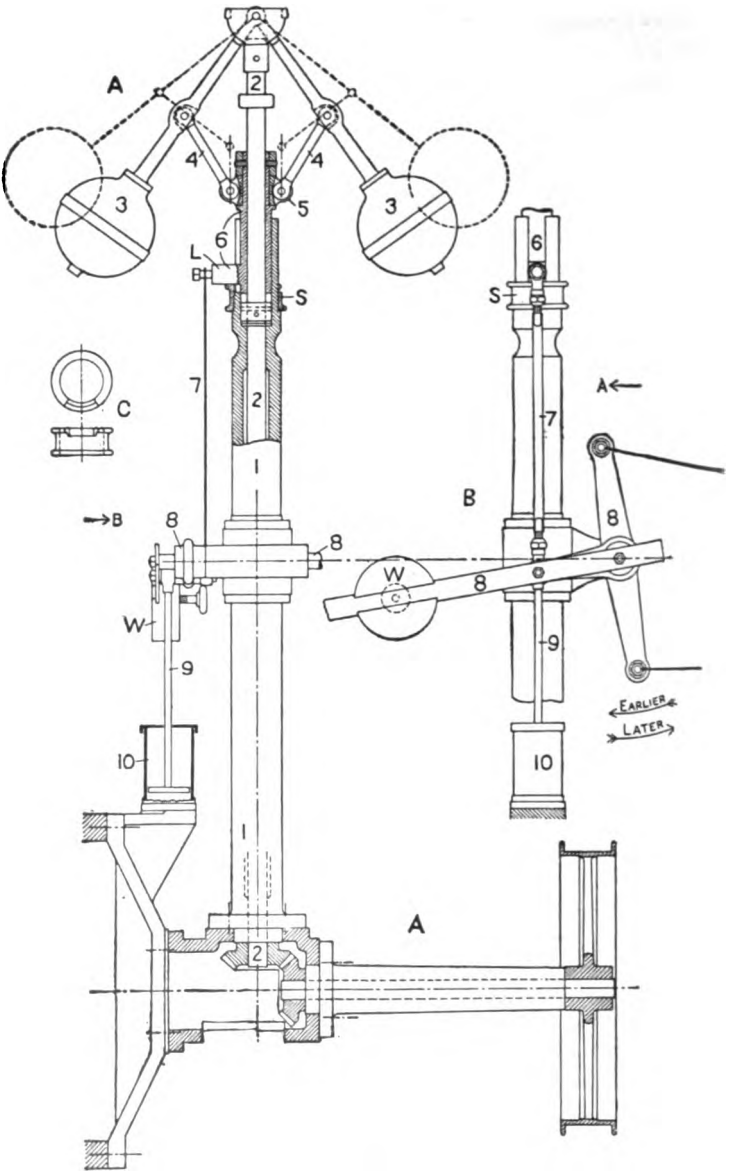

FIG. 461.—The Governor.

Digitized by Google

hand after the governor has lifted, has a part of its upper edge cut away, as shown at C on Fig. 461. When the engine is running, this notch is to be brought under L; then if through accident to its belt or for some other reason the governor ceases to turn, the balls will drop below the rest-position, the safety-cam C_2 will be brought around so far as to prevent engagement of the valve-arm and opening of the valve, and the engine will be shut down. Further, when the governor is at its highest position the knock-off cam C_1 should release the valve before it gets back to the point of admission, and thus again shut off steam so as to prevent a runaway. A disadvantage of this simple safety-stop is, that an overload sufficient to slow down the engine to any considerable degree will bring it to a dead stop, unless the engineer can foresee this condition and turn the ring to the normal rest-position; wherefore he is likely to leave it in this position, thus depriving the engine of protection against the effects of an accident to the governor.

(*f*) The Movement of the Valves.—This is best shown by plotting diagrams like Fig. 337, with the linear movement of a point on the valve-face profile, along its circular path, as ordinate and the developed eccentric-circle as base. For the steam-valves we at first disregard the releasing-gear, either imagining the oscillating crank to be fast to the valve-stem, or considering that we determine the movement of a point on this crank projected out from the valve-face. The dimensions necessary for a layout of the valve-gear are shown on Fig. 462: this particular example was measured up from the actual engine, and it will be noted that the valve-rods are adjusted to different lengths.

Having the mid-position outline drawn, we next strike the circle on AB, with a radius equal to that of the eccentric reduced to the upper end of the rocker-arm, or multiplied by the ratio GD/FD from Fig. 458. The eccentric-rod is so long that we may very well disregard its angular swing, and assume that the horizontal movement of H is harmonic. Then an angle-scale for the movement of the wrist-plate is got by dividing the eccentric-circle and projecting the points of division to the path of H. For clearness of drawing, this path is moved down to MN, on an arc

Digitized by Google

struck from O′ with a radius equal to OH. It would, of course, be a simple matter to use the exact method of Fig. 357 in laying off the position-scale for H, but the gain in accuracy would be insignificant.

The four driving-points D_1, D_2, D_3, D_4, being all on the same circle with H, this travel-scale MN is next centered on each one: where

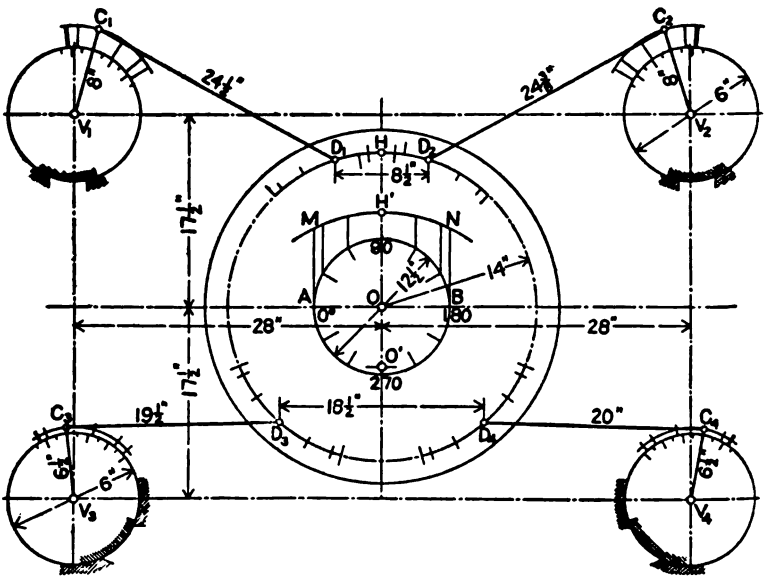

FIG. 462.—Diagram of the Valve-gear.

two paths overlap, as is the case with D_1 and D_2, one scale is marked outside, the other inside, of the circle. The positions of the C-points are now found by striking off the rod-lengths, and are then projected radially upon the circles representing the profile of the full cross-section of the valve.

Fig. 462 is the picture of a drawing in which the mechanism as a whole was laid off half-size, but the valves drawn full-size. then the actual travel of the valve-surface is given by the operation last described, and it is only necessary to rectify the curved path in order to have the desired ordinates of travel. For this purpose a scale of inches laid off on the valve-seat, here marked

Digitized by Google

on the inside of each circle, and used in connection with the horizontal ruling on Fig. 463, is most convenient.

The movement-curves got by plotting the several sets of ordinates are given in Fig. 463, I. and II. for the steam-valves, III. and IV. for the exhaust-valves. The angle-scale at the top of the diagram is the same as that on the circle AB in Fig. 462. Travel in the direction which opens the port is represented by an upward ordinate for the head-end curves I. and III., by a downward ordinate for II. and IV. The distortion from harmonic motion is very clearly shown by these curves.

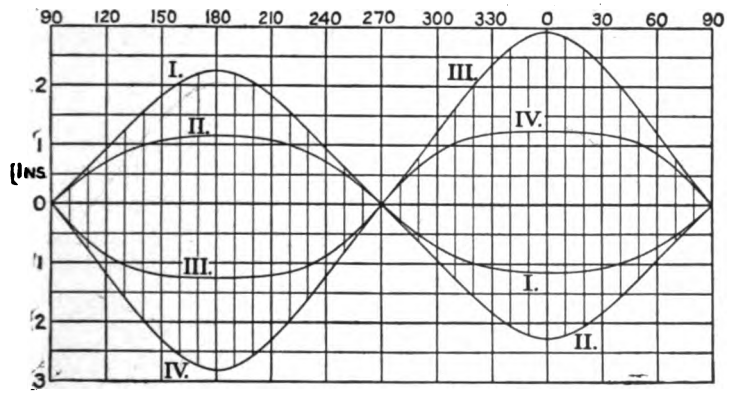

Fig. 463.—Valve-movement Curves.

(g) Eccentric-setting and Valve-action.—Having drawn the simple curves of valve-displacement in terms of eccentric-position, our next step is to combine with these the lap of the valves—measured in the usual way, in the position shown on Fig. 462—and thus find out the proper setting of the eccentric with reference to the crank. For present purposes it is enough to consider one end only of the cylinder, wherefore curves I. and III. are reproduced in Fig. 464. It is the operation of exhaust that determines the eccentric-setting, because both ends of this period have to be considered, as against only the beginning of the period of admission. Usually the lead for release, the angle TOB on Fig. 334, is less than the angle of compression, so that a small positive lap on the exhaust-valve is necessary: this is

Digitized by Google

represented by the distance of the line TS above the base-line, being here one-quarter of an inch. Since the lead for admission must be less than that for release, the steam-lap must be larger, and QR is drawn at three-eighths above the base-line. We now locate suitably the dead-center positions of the crank, A for head end, B for crank end, and find the angle δ to be about 106° or the angle of advance about 16°—by noting that when the crank is at A or zero, the eccentric is at 106° on its scale as marked below the base-line.

The Cut-off Action.—Instead of following the movement represented by the whole of curve I., the steam-valve really moves according to the full-line curves 1, 2, 3, or 4, of which the portion

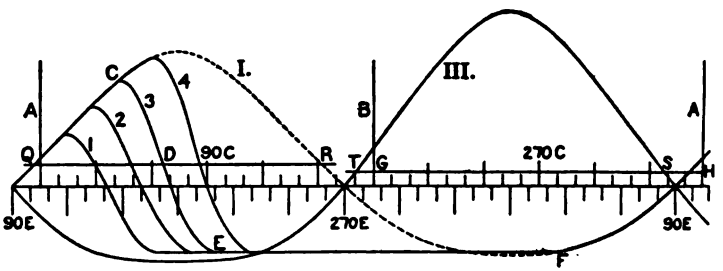

FIG. 464.—Diagrams for the Head-end Valves.

CDE shows quick closure under the pull of the dash-pot, and the straight line EF the period of rest while waiting for the next admission. These curves are merely sketched in from general considerations, since a mathematical determination of the action of the dash-pot, while not incapable of giving quite accurate results, would be, in length and complication, rather out of proportion to the importance of the subject. Only a roughly approximate calculation would be made in working out a design, to adapt the results of experience to the particular case.

Valve and Indicator Diagrams.—The steam-valve curves from Fig. 464 are re-drawn in Fig. 465, upon the stroke-line of the piston as base, the piston positions being found with the help of Table VIII. and including the effect of the connecting-rod. With these are to be compared the autographic diagrams in Fig. 466 I.,

Digitized by Google

which were taken from this same engine, being drawn by a pencil moved by the drop-rod and working on the drum of an indicator

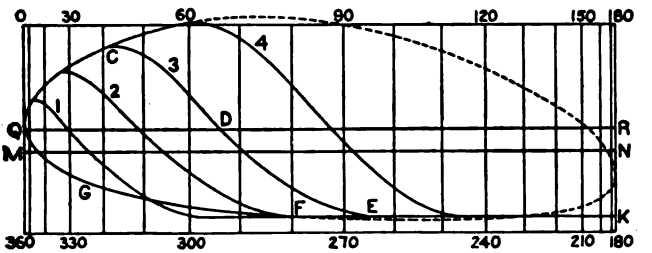

FIG. 465.—Stroke-line Diagrams for the Steam-valve.

which was connected to the ordinary reducing-motion from the cross-head. Simultaneous indicator diagrams are given at II. For the head end, the two types of diagram agree very well in proportions, the short vertical lines showing where cut-off takes place. These are first located on II., then transferred to I. with due regard to the difference in length of the diagram. The crank-end diagrams were evidently not really taken at the same time.

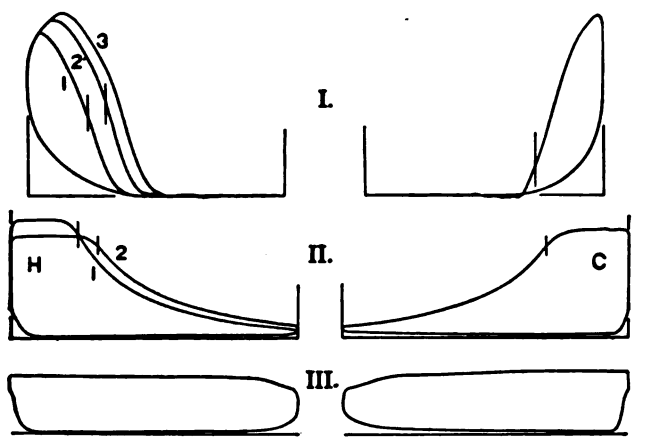

FIG. 466.—Indicator Diagrams from the Engine in Fig. 458.

The characteristic Corliss-engine diagram is well represented by Fig. 466 II.: the distinguishing features are, a horizontal

Digitized by Google

admission-line, a sharp and usually rather early cut-off, releas deferred till near the end of the stroke, and a compression-curv which begins late but rises rapidly on account of the small clear ance. At III. is shown what happens when the boiler-pressur drops so low that the engine cannot keep up to speed under it load, and the releasing-gear fails to act—the steam-consumptio per revolution being now much greater than when the plant i working properly.

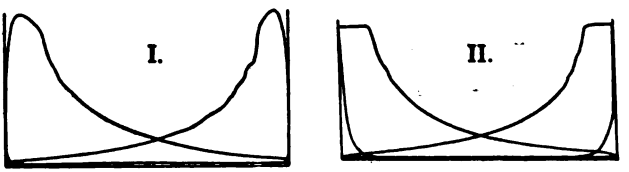

FIG. 467.—Faults in the Eccentric-setting.

A great deal of the valve-setting to be done on a Corliss engin consists simply in adjusting the lengths of the various rods. Fig 467, however, shows faults in the setting of the eccentric: at I it needs to be advanced, at II. we see the effect of advancing it too far, apparent especially in the excessive lead shown by th outward slant of the rising admission-lines.

(*h*) VALVE-RESISTANCE IN THE CORLISS GEAR.—The amount of work that must be expended in moving a set of Corliss valves is small, not so much because the valves are not at times pressed very hard upon their seats as because the movements under this heavy pressure are small. The steam-valve does resist strongly while being opened; but it need not be closed by any greater amount of overlap than required to insure tightness—Fig. 464 showing more closure-travel than is really necessary. When it is once open, any single-function valve is balanced or left free to move easily by the substantial equalization of pressure all around it. For the exhaust-valve especially there is a decided gain in a marked distortion from harmonic motion. Referring to Fig. 464 we see that the period of rest and of slow movement of this valve coincides with the time when the steam-pressure in the cylinder is high: and the wide and rapid movement takes

Digitized by Google

place after the pressure has been lowered by expansion and while the port is open.

Since the Corliss valves are, for a part of each revolution, definitely unbalanced, we have a better and surer basis for design of the gear, as to strength, than with balanced slide-valves which work under less determinable conditions.

(*i*) VARIOUS FORMS OF THE CORLISS VALVE.—As to the steam-valve, we first of all draw a distinction between inside and outside admission. The former is shown in Figs. 262 and 462 and in Fig. 468 II. and IV., the latter in Fig. 468 I. and III. With a valve formed as in Fig. 262, outside admission has the small disadvantage that the steam-current must follow a longer and more tortuous path; and the valve in Fig. 468 I. is an improvement in this respect.

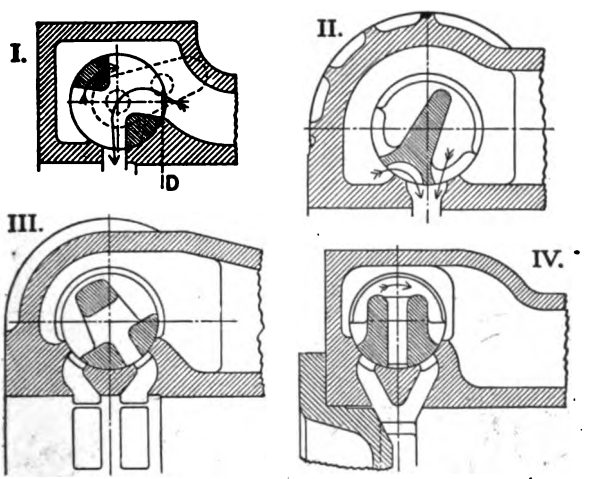

FIG. 468.—Various Steam-valves: I. Passage through Valve; II. Murray Valve; III. Brown Valve; IV. Reynolds Valve.

Of more importance is the matter of securing double admission. Fig. 468 II. shows how this can be done with a single port, using the principle of the B valve for the second opening. Note that after the right-side valve-face gets to the middle of the port—just a little beyond the position in the drawing—there will be

Digitized by Google

no further increase in the effective opening as the valve advances; and that the mouth of the port is made wider than the main part of the passage by the width of the narrow valve-face.

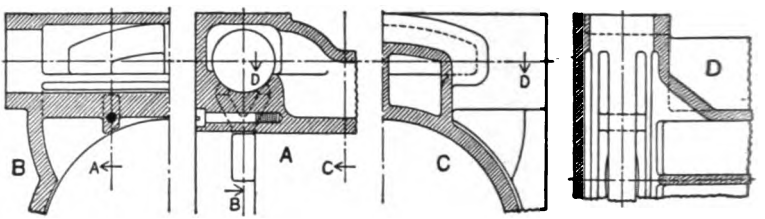

FIG. 469.—Detail of Cylinder-casting, Valve in Fig. 468 IV.

Two valves which may properly be called double-ported, with interesting differences in form, are given in Fig. 468 III. and IV.; and the valve- and steam-chamber belonging to the latter is shown in detail by Fig. 469. This supplements the cylinder drawing in Figs. 261 and 262, and illustrates a somewhat different form of steam-chamber, most clearly shown, perhaps, by the horizontal section at D. Note how the heavy cross-struts cast in the port are reinforced by stay-bolts.

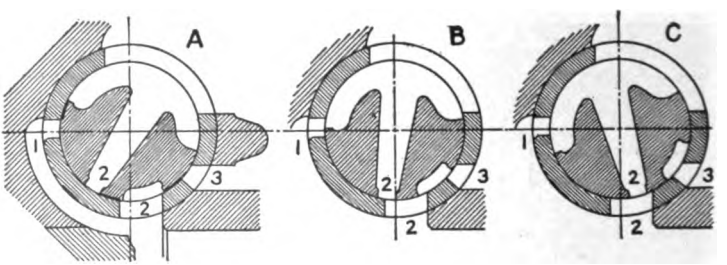

FIG. 470.—Fleming Triple-ported Valve.

A triple-ported valve, belonging to the engine in Fig. 263 and the valve-gear in Figs. 490 to 493, is shown in several positions in Fig. 470. View A is mid-position, with the three laps marked on the valve; in view B the third opening, through port 3, has

Digitized by Google

its greatest effective value; thereafter it is gradually choked off, and is entirely closed for some little time before the extreme position at C is reached. This valve is controlled by a shaft-governor, and it is for the short travels that go with early cut-off that the third port is intended to be effective—compare Figs. 351 and 352.

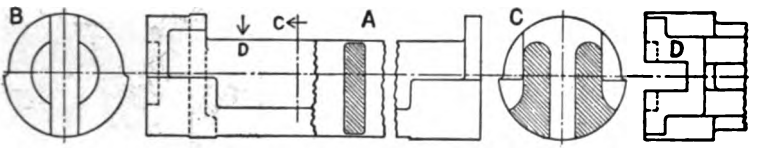

FIG. 471.—Detail of Reynolds Valve; Allis-Chalmers Co., Fig. 468 IV.

The detail drawing in Fig. 471 is intended to illustrate especially the construction of the valve at the ends or heads, and to show the amount of bearing-surface which these heads carry. Similar proportions appear at II. and III. in Fig. 468; but sometimes the heads are fully cylindrical, as on the valve in Fig. 470, which has also a full bearing in the two vertical webs that tie together the walls of the steam-chamber.

The exhaust-valve shown in Fig. 472 I. differs from that in Fig. 262 only in having a part of the cylindrical surface cut back, so as to leave merely a face wide enough to cover the port properly when closed, with sufficient lap over both edges. At II. the steam passes through the valve, and openings at top and bottom are closed at the same time. The especial object of this arrangement is to diminish cylinder clearance: but since it is hardly possible to make and keep the valve tight enough to prevent leakage at the top, this object can be only partially attained. The action of the valves at III., IV., and V. is obvious: the last shows a very effective way of reducing clearance to a minimum, by moving the valve partly into the cylinder-space. The critical position as to the possible interference of valve and piston is shown in the drawing, for reference to Fig. 464 shows that the exhaust-valve reaches its extreme position for closure while the piston is yet near the beginning of the stroke. The valves in Fig. 472 VI. call for no comment. A fact to be noted is that all these exhaust-

Digitized by Google

valves open by turning in the same direction, the working edg having the same movement—outward to open, inward to close as in the case of a common direct D valve.

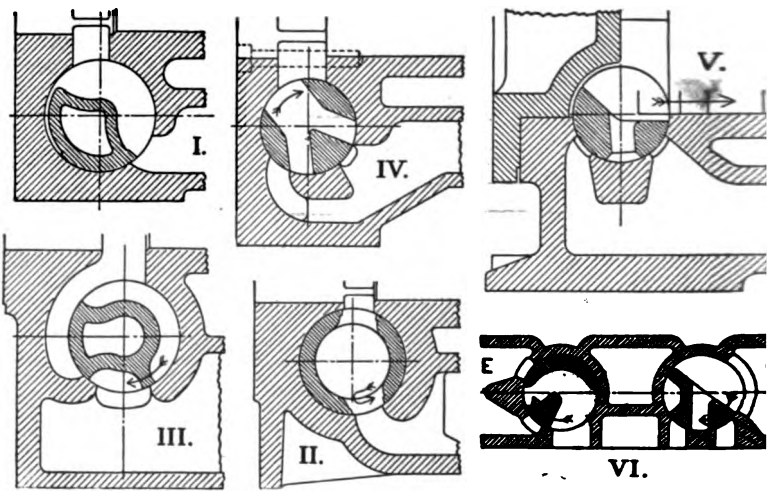

FIG. 472.—Various Exhaust-valves: I. Plain Single-ported Valve; II Fleming Valve; III. Murray Valve; IV. Reynolds Valve; V. Brow Valve; VI. Valves in Head, Cylinder in Fig. 268.

(*j*) VARIOUS FORMS OF THE CORLISS GEAR.—Some importan general relations are illustrated in Fig. 473. Two basal ideas are first, that so much of the wrist-plate as serves to drive any on valve (any HOD on Fig. 462 or Fig. 473) may be considered a simply a rocker-arm, either direct-driving or reversing; second that the valve-crank drives directly when, as at the steam-valv in Fig. 473 I., the point K and the working valve-edge move i the same absolute direction; but it is indirect when the driving-point K is opposite to the valve-edge, with respect to the axis of the valve. Then for the normal wrist-plate drive, with H at the top as in Fig. 458, the outside-admission valve is of the "direct" type (compare Fig. 336) and is directly driven; with inside admission, reversal of valve-movement is compensated by the change to an indirect valve-crank; and the exhaust-valves,

Digitized by Google

themselves direct, are driven by two reversing-levers which neutralize each other; wherefore the normal eccentric-setting is "direct", as indicated at COE. Only by connecting at the bottom, at H′, or by the use of a reversing-rocker between the wrist-plate

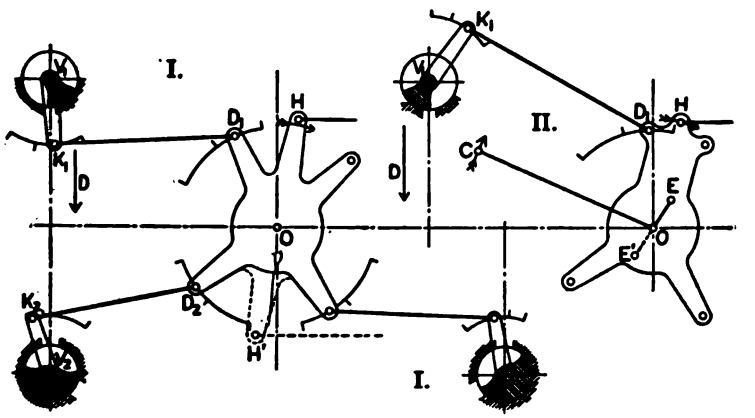

Fig. 473.—Typical Arrangements of the Common Corliss Gear: I. Outside Admission; II. Inside Admission.

and the eccentric, is the latter thrown into the indirect position at E′.

A little study of Fig. 473 will show that if the desired distortion from harmonic motion is to be secured, and the several valve-rods kept clear from crossing and interfering with each other, the only possible ways of connecting the valve-arms to the wrist-plate are those shown on that figure. In every case, the rod DK is in tension when opening the valve, or the valves are pulled open and pushed shut. Another simple relation is, that the outside-admission valve has the drop-rod inside, and *vice versa*.

Fig. 474, besides showing the general arrangement for this case, is intended to bring out the particular point that on a vertical engine the two drop-rods must be on opposite sides of their respective valve-spindles—with corresponding differences in the arrangement of the two releasing-gears.

Digitized by Google

One important step in the development of a Corliss ge for higher speed is the adoptic of the double-ported valve, whi diminishes the amount of mov ment required; another is to redu the mass of the valve-gear par especially by making the wrist-pla as light as possible, or by gettii rid of it altogether. For the steai valves there is no great advantage non-harmonic motion, with a relea ing-gear; so that they can ve properly be driven by a simple ai direct system of rods, as in both cas of Fig. 475. But for the exhaus valves the wrist-plate effect is high desirable, as brought out in Art. (*h* so that I. shows a better design tha II. in Fig. 475. Another example of t use of a separate bell-crank near eac valve, instead of a central wrist-plate, is given in Fig. 490. this connection it may be well to remark that a number builders offer to furnish Corliss engines to run at speeds as hig as 150 or 160 R.P.M.

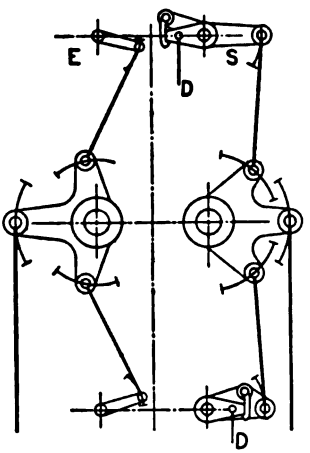

FIG. 474.—Corliss Gear in a Vertical Engine, with Two Eccentrics, and Valves in Cylinder-heads.

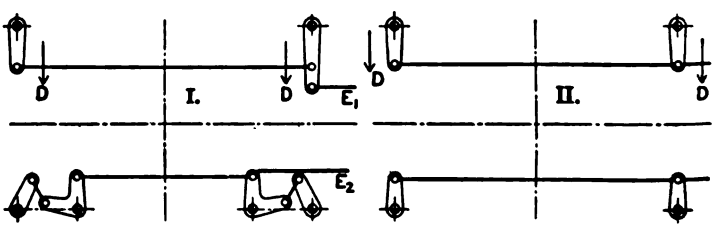

FIG. 475.—Gears without the Wrist-plate: I. Brown-Corliss; II. Lane a Bodley.

(*k*) THE USE OF TWO ECCENTRICS.—We have already state in (*e*), that the valve must be released before the eccentric ge to its dead-point, and have shown in (*g*) that an eccentric to driv

Digitized by Google

exhaust-valves must have some advance, usually 15 to 20 degrees. This condition is represented in Fig. 476 I., where δ has the minimum value 105°, and it is assumed that latest dependable release must take place 15° before dead-center of the eccentric, or when the crank is at 60°: this corresponds very closely with curve 4 on Fig. 464.

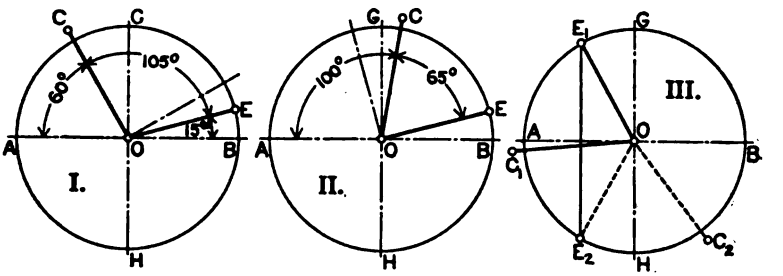

FIG. 476.—Diagrams of Eccentric-setting.

A very obvious way to increase the range of cut-off is to set the eccentric back, toward the crank, so that it will turn through a larger angle from the position for crank on dead-center to that for latest release. In Fig. 476 II. the negative advance or the angle of lag is 25°, and the latest cut-off begins with the crank about at 100°. It is entirely evident that this eccentric can be used for the steam-valves only.

The limit to the setting back of the eccentric is found in the fact that if the negative lap is made too great, the valve will not cover the port effectively when closed. Thus in Fig. 476 III., C_1OE_1 is the crank-eccentric from II. in the position for beginning of admission, and we see through what a small distance the valve has moved from its rest-position—a distance which is all the smaller if there has been much wrist-plate effect. This shows that the direct drive in Fig. 475 is highly appropriate if the eccentric is to be set well back of the 90-degree position. Fig. 476 III. brings out further the absolute necessity of insuring that a gear of this type shall never fail to release: for the condition which produced the indicator diagrams in Fig. 466 III. would in this case keep the valve open until the crank got around to C_2, or far into the exhaust-period.

Digitized by Google

(*l*) GEARS WITH MOVING TRIP-CAMS.—An alternate to the scheme of usuing a separate eccentric for the steam-valves is found in the rather recently applied idea of giving the knock-off

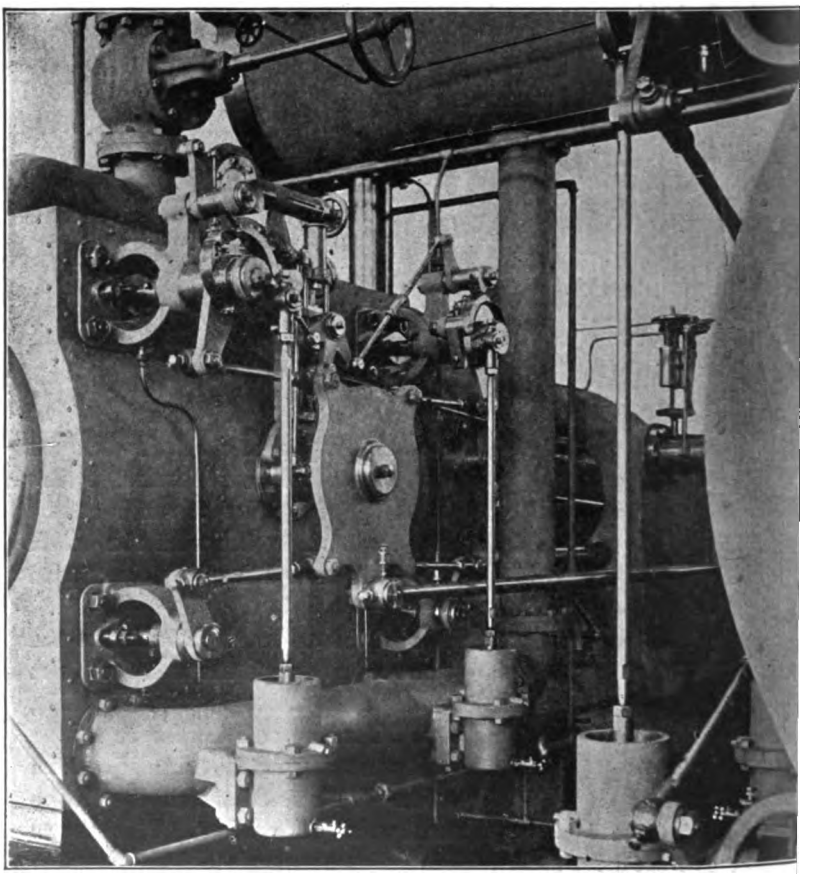

FIG. 477.—Extended Cut-off Gear, from the Snow Pumping-engine, Fig. 229.

cams an oscillating movement, so that they can catch and move the trip-arm even after the valve has started to return from its position of extreme opening. This type of gear is used chiefly on pumping-engines that deliver directly into the mains, working

Digitized by Google

against a moderate water-pressure ordinarily, but required to produce a much higher pressure when water is needed for fighting fire. A good example is illustrated in Fig. 477, and is further outlined and discussed in Fig. 478.

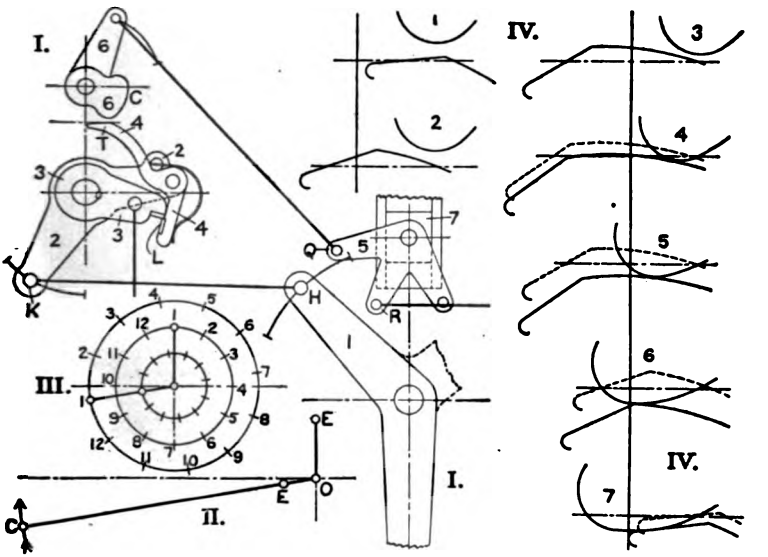

FIG. 478.—Action of the Snow Gear.

In Fig. 478 I. the gear for the head end is shown, and from the wrist-plate 1 to the hook-piece 4 it is of the usual form, except for the special shape of the tail T. The auxiliary rocker or wrist-plate 5 is driven from the main cross-head, the point R moving as if directly connected to the eccentric-center marked F on II. The block 7 is held and moved by the regulator, being raised to retard cut-off, lowered to hasten it. To illustrate the action of the oscillating cam C on piece 6, a series of successive positions of C and T is drawn at IV., the numbers corresponding to the angular positions of the crank-eccentric indicated at III. In cases 4 to 7, the dotted outline shows where T would be if not depressed by the cam C; and it is evident that release of the valve will take place between positions 4 and 5, when the crank

Digitized by Google

is near 90°. Note that T has its maximum travel to the left at 4, while C does not get to its lowest position till a little after 7.

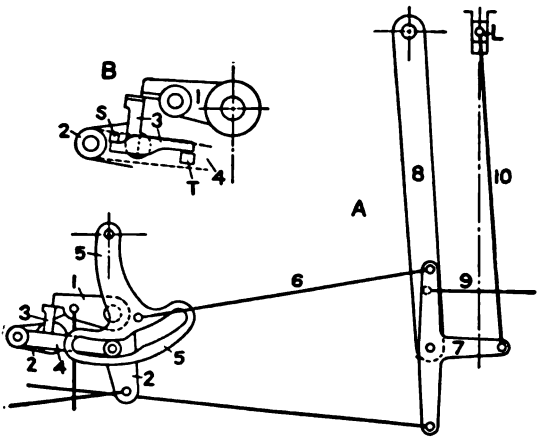

FIG. 479.—Nordberg Gear with Moving Trip-cams.

A device on this principle for an ordinary power engine is sketched in Fig. 479. The cam-piece 5 is pivoted at the top and moved by the oscillating lever 8, which is driven from a special eccentric on or near the crank-line, through the rod 9. The governor exerts its control through the T crank 7, the letter L marking the same piece here as on Fig. 461. The latch 3 cannot be fastened rigidly to the arm 4, since it must be free to spring back and let the end of 5 slide up past it. At B is shown how a horizontal arm fast to 3 can rest against the stop S on piece 2 ordinarily, and be raised at the other end by the projection T on piece 4 when the free end of 4 is raised by the cam-slot in 5. By allowing a slight clearance at this point, 4 is left free for the small movement due to the fact that the plain part of the cam-slot is not an arc central at the point about which the main arm 2 oscillates.

An interesting and unique valve-gear is shown in Fig. 480. The method of releasing is essentially the same as in Fig. 478; but the valve, instead of being closed by a dash-pot, is turned back positively by the oscillating cam-piece. The primary mech-

Digitized by Google

anism, consisting of the free crank 2 and the disk 3 keyed to the valve-spindle, is obvious. Here again the rocker 5 is driven from the cross-head, with the effect of a center at F in II. The action of the cut-off gear is best seen from III., with the help of the detail

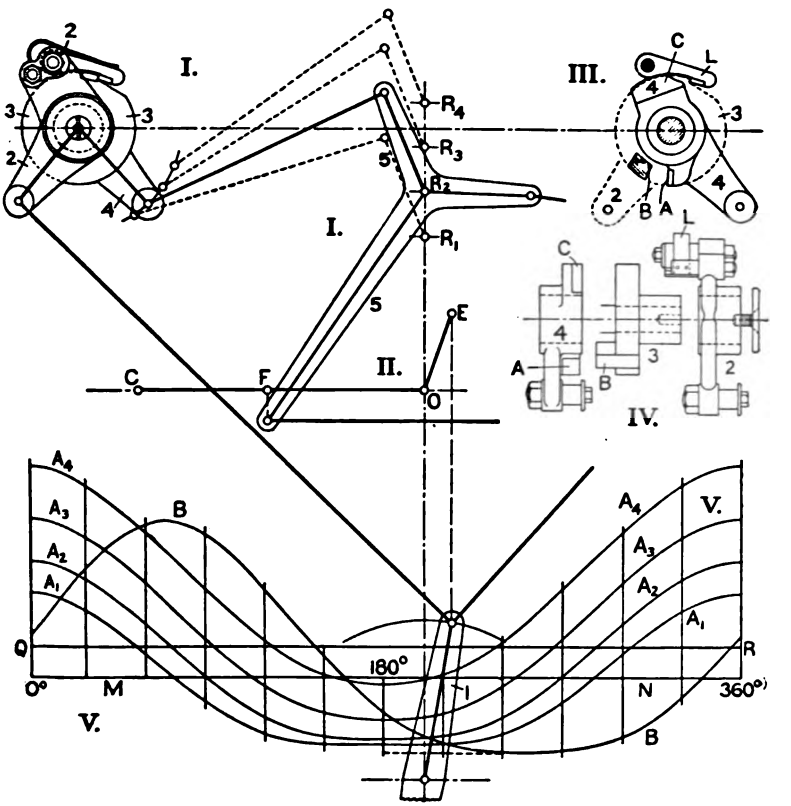

FIG. 480.—Steam-valve Gear of the Holly Pumping-engine, Figs. 227, 269.

sketches at IV. Just after the cam C raises the latch L clear of the hook-plate on 3, the arm A on 4 comes into contact with the stud B which projects back from 3, and pushes the valve back. To show the action fully, a set of motion curves is plotted at V. If pieces 2 and 3 were locked together with the latch engaged

Digitized by Google

as in I., the edge B would move according to curve B; the ordinate of the curve, laid off from MN as base, showing the curvilinear distance of B from a mid-position determined by putting the eccentric at 90°. Similar curves for edge A, which actually determines the movement of B, are given at A_1 to A_4, showing travel from the same reference position that was used for B. As it happens, the disk 3 has the same diameter as the valve, so that these curves show valve-face movement directly. The lap-line is drawn at QR, and we see how the cut-off, shown by the intersection of the A curves with QR, is varied as the position of the regulator-block ranges from R_1 to R_4 in I. The critical point in the action of this valve-gear is on the side of closure. With earliest cut-off, curve A_1, the disk 3 must not be turned so far that the hook cannot engage; while curve A_4, for latest cut-off must dip below the lap-line QR far enough to secure effective sealing of the port. A disadvantage is that with late cut-off the hook is moving quite rapidly when it engages the disk, which involves a severe jerk on the machinery; but this is not of much importance, because the engine is required to develop its highest power only occasionally and for short periods, and a condition near A_2 prevails normally.

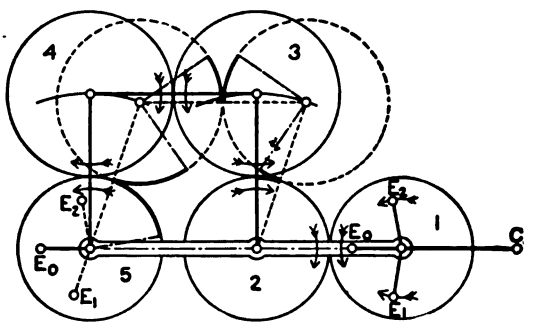

FIG. 481.—Scheme for Reversing the Corliss Engine.

(*m*) A REVERSIBLE CORLISS ENGINE.—The gear outlined in Fig. 481 is taken, with some modification in the driving arrangement, from the description of a large mine-hoist in *Power* for

Nov., 1904. A link-motion could not be used in this case, because shortening the eccentric-radius will make the releasing-gear fail to act: instead, the eccentric-radius at full length must be rotated on the shaft from one running-position to the other, as indicated on gear-wheel No. 1 in Fig. 481, which wheel is either on the shaft or is made to turn with it. In the train 2 3 4 5, the intermediate gears 3 and 4 are carried at the corners of a jointed parallelogram; for the "mid-gear" setting of the eccentric E_0 in 5, with reference to the crank on 1, the wheels are in the full-line position. By holding 1 and 2 fixed and swinging the frame to the right, as shown in dotted lines, the eccentric on 5 is moved to E_2; and an opposite swing will carry it to E_1. To make clear the action of the mechanism, the radii of 3, 4, and 5 which originally lay under the bars of the frame are drawn in dot-and-dash on the second position; and the length of pitch-circle which has rolled away from each contact-point is indicated by heavy black arcs. It must be understood that this rigging is used only for complete reversal, the cut-off being determined by the usual trip-cams, under hand-control.

(*n*) DETAIL OF THE RELEASING-GEAR.—A number of typical devices are grouped together in Fig. 482. The same reference-numbers are used on all the figures, 1 designating the oscillating crank (skeletonized on all but VI.), 2 the latch-piece, 3 the valve-arm, and 4 the cam-piece: the parts are lettered mostly as on Fig. 460, C_1 marking the trip-cam and C_2 the safety-cam. The rod driving 1 is marked W when it goes to a wrist-plate, E when the direct drive of Fig. 475 is used. Design I. is an improvement on the standard rig in Fig. 460, in the direction of quiet and easy running; the tail of the hook carries a roller, and this works on non-metallic surfaces, the cam-blocks being made of the hard leather-like composition known as "fibre", and the same substance used to face the cam-ring between the blocks and for a little pad under the stop-pin S. At II. we see another case of the use of the roller, the trip-cam also being of this form. In III., typical of several designs, the trip-arm takes the form of a long tail, the side of which slides on the cams. IV. shows a case of hooking fast from the inside, while in V. the cam is of the positive-movement

Digitized by Google

type, so that the latch-block must be free to slide up and down. Finally, VI. shows a design with the fixed catch-plate on piece 1 and the latch-blocks in 3; this latch is a simple rectangular piece of steel, fitting easily in the slot in 3, dropping into place by gravity

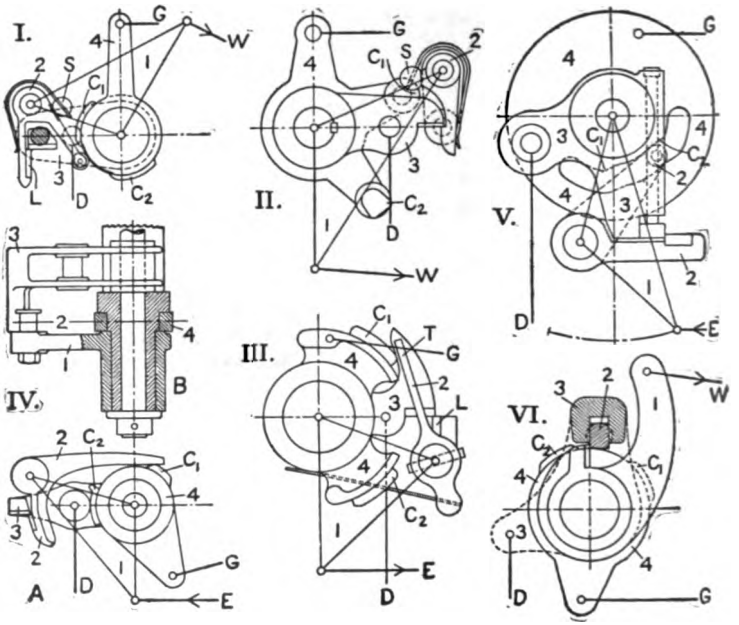

FIG. 482.—Various Releasing-gears: I. Murray-Corliss; II. Fishkill; III. Brown; IV. Lane & Bodley; V. Harris; VI. Robinson.

alone, and supported by a roller at each end, these resting on double cam-rings.

Inside and Outside Valve-arms.—An important distinction in the arrangement of the cut-off gear is brought out by comparing IV. B in Fig. 482 with Fig. 460. In the latter, and in all the designs here shown except III. and IV., the valve-arm is at the outer end of the spindle, beyond the bracket. The principal forces can be brought closer to the cylinder (and hence be less severe upon the valve-bracket) by putting the keyed valve-arm inside of all the rest of the gear, in the opening of the bracket

Digitized by Google

which gives access to the stuffing-box—this opening being suitably enlarged. In every case, however, the oscillating crank and the cam-gear are carried on a stud projecting from the bracket.

Some European designers have put the releasing-gear in the valve-rods (marked DC on Fig. 462) instead of between two oscillating cranks, changing the latch-mechanism as necessary; but this plan seems to have little to recommend it.

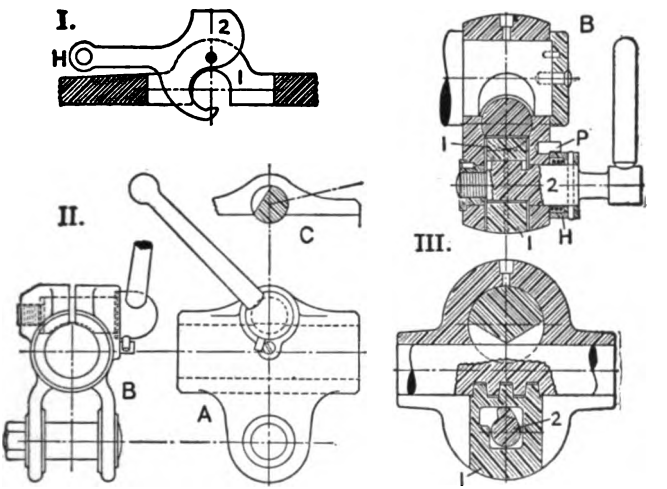

FIG. 483.—Different Unhooking Devices: I. Murray; II. Harris; III. Brown.

(o) DEVICES FOR RELEASING THE DRIVING-ROD.—An improvement on Fig. 458 C is shown in Fig. 483 I., the cam-plate holding the rod down when in the running position and lifting it off the pin as the handle H is swung to the right. Devices which take an even firmer hold, with less tendency to wear loose and rattle, are given at II. and III. The first belongs to a gear arranged, at the cylinder, like those in Fig. 475, the block being at the middle of the horizontal rod connecting the two oscillating cranks. In both, the first movement of the handle, from the free position, engages a positive catch; and further movement clamps the split block tightly upon the rod. In III., the cam 2 is held down

Digitized by Google

(joint open) by friction of a slight elevation on the hub H, under the pin P: raising the handle a little frees the hub, whereupon the spring inside of H throws the block 1 up as soon as the teeth come into the engaging position: and after this automatic engagement the block is clamped by hand. Another scheme is to make the wrist-plate of two disks, one driven by the reach-rod, with some arrangement for locking the disks together.

(*p*) THE DASH-POT.—The two typical forms of this device are shown in Figs. 484 and 485, with single and double plunger respectively. The dash-pot has two functions: the first, to develop a strong force to pull the valve shut quickly; the second, to bring the moving parts quietly to rest after the valve is closed. The name comes properly from this second function, chiefly because the earlier engines had weights or springs to close the valves, and the dash-pot was then only what its name implies.

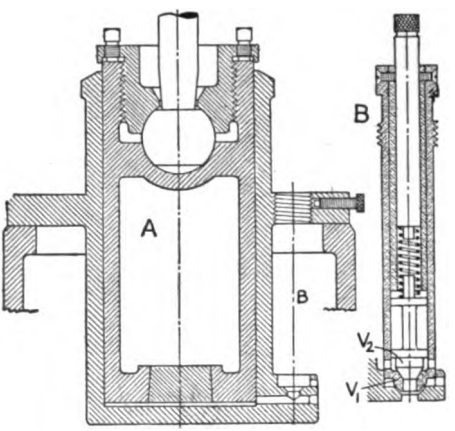

FIG. 484.—A Single-plunger Dash-pot, Frick Design.

A possible arrangement consists of a simple plunger, with a small cock to regulate the necessary flow of air. To get a wider and more flexible adjustment, several valves are used, and in the majority of cases a second plunger is added, as P_2 in Fig. 485, which takes most of the cushioning function, leaving the vacuum action chiefly to P_1.

As the plunger rises, a partial vacuum is formed beneath it, and some air is drawn in; as it nears the bottom of the cylinder, on the drop, this air is compressed and furnishes the needed counter-force. In both figures we see first an adjustable valve V_1, next a check-valve V_2; so that the egress is made freer than the ingress, to allow for the fact that the downward movement is quicker

Digitized by Google

than the rise. During the long rest between admissions the excess of air can all escape, until only atmospheric pressure is left in the small clearance-space beneath the plunger. The cushion-valve V_3 on Fig. 485 does not close its passage even when

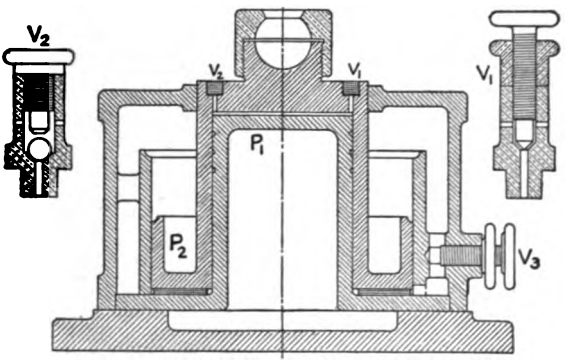

FIG. 485.—A Two-plunger Dash-pot, Vilter Design.

screwed all the way in. Relative to the piston-displacement, this valve is larger than V_1 and V_2, so as to permit a freer inflow under the outer plunger, which therefore exerts less pull on account of vacuum, and is more strongly checked on the down stroke. It must be understood that these devices are based much more on experience and trial than on *a priori* reasoning—both as to form and as to proportions.

§ 57. Releasing-gears with Gridiron Valves.

There are a number of standard engines which have flat gridiron valves moved by releasing valve-gears. In the general arrangement of the valves and in the form of the mechanism they show greater variations than do the more numerous Corliss designs; but they are sufficiently represented by the two examples now to be described.

(*a*) THE GREENE VALVE-GEAR.—In Fig. 486, view A shows the special gear for the steam-valves, the slide S being carried on a bracket from the cylinder and moved by the rod E. The catches

Digitized by Google

C, C, adjusted as to height by the governor-gear G, engage alternately the trip-toes T, T, and push the valves open: the latter are closed, after release, by the steam-pressure on the ends of the large valve-rods and by the drop-rods D, D. By making the

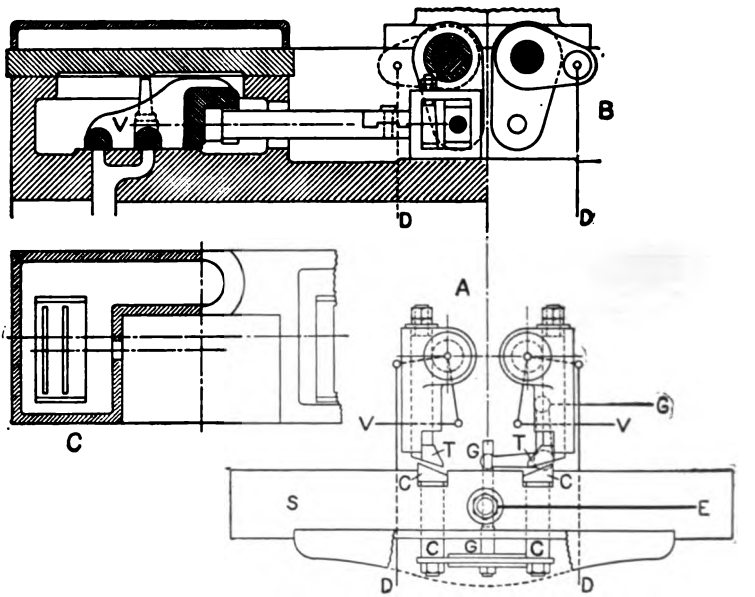

FIG. 486.—Valve-gear of 20″×42″ Greene Engine. Scale 1 to 12 and 1 to 30.

toes T, T, of slightly unequal length, the cut-offs can be equalized against the distortion in piston-movement caused by the connecting-rod. View B is a partial section of the cylinder and valve, showing the push-cranks and the drop-rod arms on the oscillating shafts which transfer movement from the catch-gear to the top of the cylinder. Note the adjustable bearing for the slide-block, in the valve-rod end. View C is partly a top view, partly a section above the valve-seat, to show how the steam- and valve-chambers are formed upon the cylinder, in such a way as to leave a clear space for the valve-gear. The exhaust-valves are set crosswise as in Fig. 264, and driven, with a strong distortion from harmonic

Digitized by Google

motion, by an oscillating shaft which lies parallel to the axis of the cylinder.

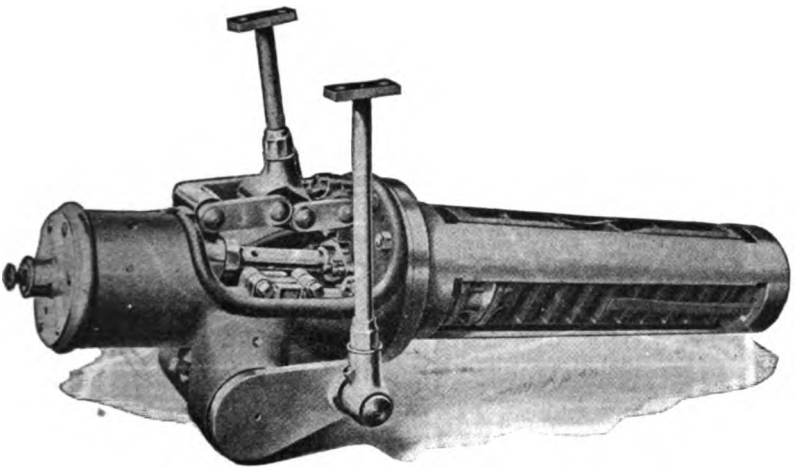

FIG. 487.—Valve-plug and Gear, Wheelock Engine, see Figs. 214, 266.

(*b*) THE WHEELOCK VALVE-GEAR.—The valve-plug belonging to the cylinder in Fig. 266, with all the gear that is mounted upon it, is shown in Fig. 487, while the detail of the mechanism is given in Fig. 488. The valve-pusher 2 carries the hook-block H, which engages the latch L on the slide 3, the latter being free to move up and down between shoulders on the head 4 fast to the valve-rod. As better shown in view B, the latch L has projecting ends which rest upon the lifter 5, and this is raised and lowered by the cam 6. This piece is swung one way or the other by the governor; the part marked C_1 regulates the cut-off, while C_2 is the safety-cam, acting just as in a Corliss engine, and raising the latch L so far that H cannot engage it. Latest cut-off is indicated by dotted-line positions of H and L and of the arm 2 on view A, the greatest valve-travel, with the dimensions shown at C, being $1\frac{1}{8}''$. Note how small is the lap of this valve, on both sides of the port, when closed.

The steam-valve is closed by steam-pressure on the end of the valve-rod and by the spring, with perhaps a little help from

Digitized by Google

the dash-pot: but the latter serves chiefly as a cushion, with a leather pad to limit the stroke of the plunger. The toggle-joint mechanism for the exhaust-valve is merely outlined on this figure: note that the rod for this valve has a good bearing in the head of the bracket, alongside of the dash-pot. In B the sectional outline of this head is dotted upon the full view taken farther in.

The action of these gears differs in no essential from that of the Corliss gear: but one point to be remarked in both is that the

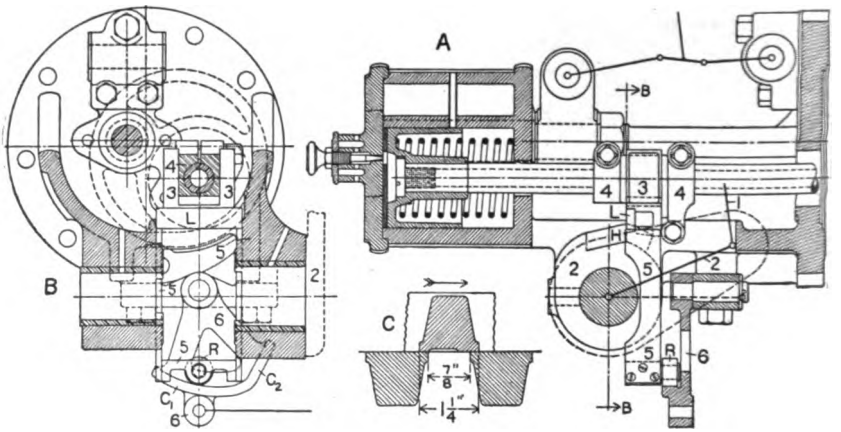

FIG. 488.—Details of Wheelock Gear. Scale 1 to 8.

piece carrying the catch-plate has harmonic motion, as is likewise the case in Figs. 475 and 482 V. We have here illustrated two types of gridiron valve, the first in Fig. 486, with a few long ports and a sidewise movement; the second valve is long and narrow, with many short bars set across and with the movement lengthwise. The latter type is more often used; and in several designs admission-valves of this form are placed vertically on the side of the (horizontal) cylinder, with the exhaust-valves beneath the cylinder, as described under Fig. 486.

§ 58. Non-harmonic Gears with Variable Eccentric.

(*a*) THE PORTER-ALLEN VALVE-GEAR.—The primary mechanism in Fig. 489 I., consisting of the eccentric OE, the oscillating link

Digitized by Google

EAD or 1 and the carrying-rod 2, is a radial valve-gear. That the movement of D, or of any point B in the slot, is the resultant of two component eccentrics is better shown at II. The mid-position A_0D_0 of the link is determined by bringing E to O; if now this center E on the rod AE were brought to B, the link would move to A_1D_1, every point on it receiving the horizontal displacement of the eccentric-center E. Swinging the rod to A_1E rotates the link to A_1D_2: and it is easy to see that the additional travel D_1D_2 is equal to the horizontal projection FE_1

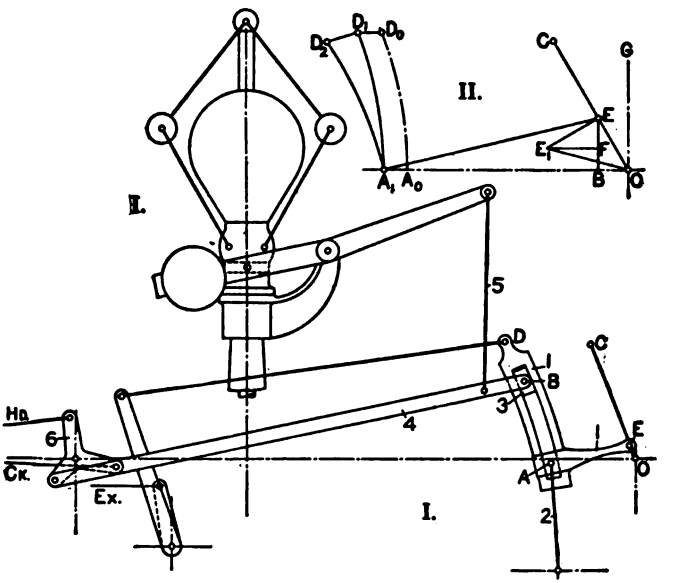

Fig. 489.—Outline of Porter-Allen Valve-gear.

of an eccentric EE_1, perpendicular to OE and in length equal to $OE \times AD/AE$. Then the resultant eccentric is OE_1; and as the variable driving-point B moves along the arc AD, the effective eccentric-center will move along EE_1. The eccentric-rod AE is so short that its effect upon the horizontal movement of A must be considerable.

In the actual mechanism, the link AD is formed right upon one half of the eccentric-strap. The exhaust-valves, coupled on

Digitized by Google

one rod as in Fig. 250, are driven from D; while separate rods from the two arms of the wrist-plate 6 give the steam-valves a movement which is very decidedly shortened up on the closure side. The action of the governor is obvious.

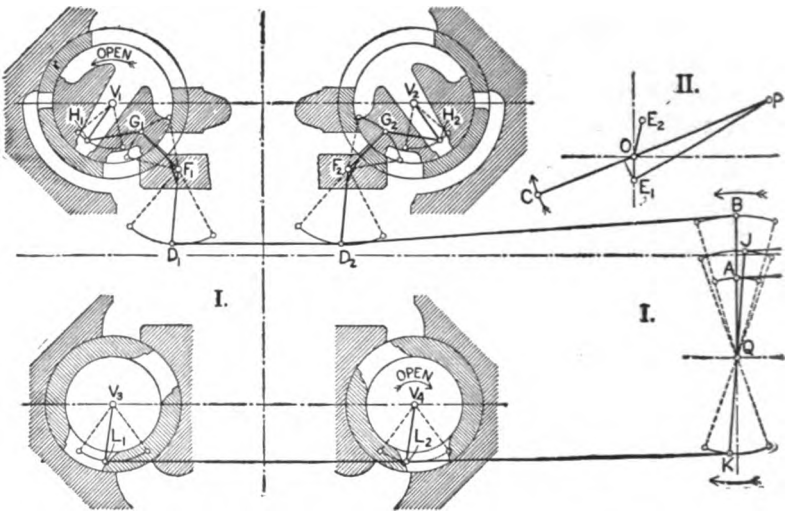

FIG. 490.—Outline of Fleming I our-valve Gear, for 16″×16″ Engine. Scale 1 to 14, 1 to 7.

(*b*) THE FLEMING VALVE-GEAR, shown on Figs. 215 and 263, is drawn in outline for a simple engine in Fig. 490, the valves being made double-size. The bent levers DFG act as individual wrist-plates for the steam-valves, producing a strongly non-symmetrical movement, as is shown by dotting in the extreme positions. The eccentric-setting is indicated at II. The steam-valves are directly driven at H—refer to § 57 (*j*)—but the indirect wrist-plate connection, with a direct rocker-arm QAB, makes the eccentric indirect at E_1. The exhaust-valves here have a movement opposite to that in the ordinary Corliss gear; but the reversing-rocker KQJ balances this, so that the fixed exhaust-eccentric OE_2 has the direct setting.

The first thing to do with a gear of this sort is to plot a general diagram for the movement of the mechanism at the cylinder,

Digitized by Google

without regard to the eccentric, as in Fig. 491. Here the abscissa, measured from EF along AB, is the horizontal displacement of the point A on the steam rocker-arm; the ordinate, measured from AB, is the corresponding travel of the valve-edge along the

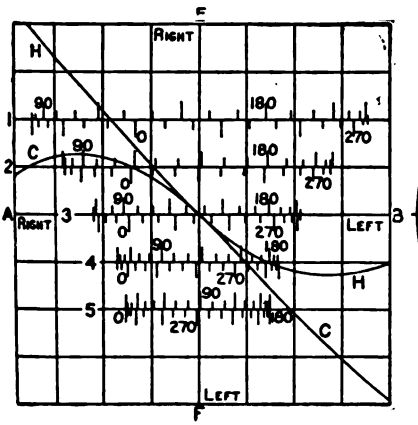

FIG. 491.—Motion Diagram for Gear on Cylinder

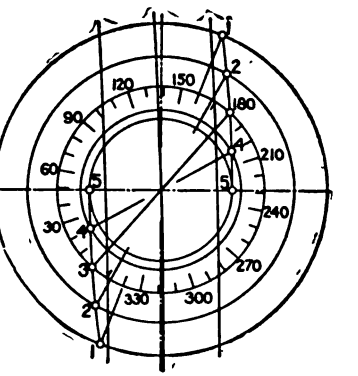

FIG. 492.—Eccentric Diagrams. Scale 1 to 2.

curved seat. The mid-position from which all travels are measured is drawn in full lines on Fig. 490, for the eccentric at 90°. The head-end curve H has travel for opening laid off upward, the crank-end curve C downward.

The next step is to draw a set of plain eccentric diagrams like Fig. 357 I. (compare Fig. 359 as to general arrangement). In Fig. 492 the E-locus is laid off with the known dimensions of the governor, and the whole range of movement is divided into four equal parts. On each eccentric-circle (as on no. 3 only in the figure) must be laid off an angle-scale, with the zero where the eccentric is when the crank is on head-end dead-center. The reference-line being an arc struck with the eccentric-rod as radius, the actual displacements of A can be very exactly measured off directly from this figure. Distances thus got are laid off on the base of Fig. 490, being indicated by the several displacement-scales there marked, which show positions of A corresponding to crank-positions designated by the angle-numbers.

Digitized by Google

Ordinates from Fig. 491 are now used to plot curves on the developed crank-circle, as in Fig. 463 (and Fig. 337). To avoid overlapping and confusion, separated base-lines are used in Fig. 493, A_1B_1 for the head end, A_2B_2 for the crank end. The effect of the difference in the angles $D_1F_1G_1$, $D_2F_2G_2$ on Fig. 490 is seen in the shorter travel of the crank-end valve. With this shorter travel can very well be used a smaller lap than in the head end, so as to get equalized cut-offs with practical equality in the effective widths of opening.

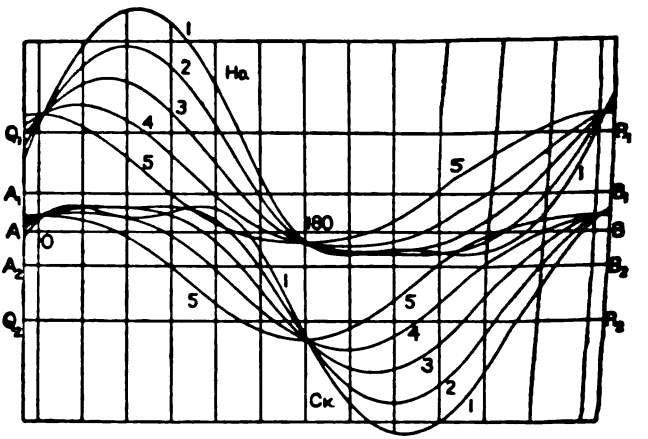

FIG. 493.—Curves of Valve-movement.

The action of the triple-ported steam-valves in this engine has already been discussed, under Fig. 470. The exhaust-valves call for no additional comment here, having been illustrated in Fig. 472; some remarks under Fig. 475, as to the advantage of retaining the wrist-plate effect in the exhaust-valve drive, are equally applicable to this gear.

(*c*) THE BALL FOUR-VALVE GEAR.—The most highly developed design with four valves is partly shown in Fig. 494. By putting the valves in the cylinder-heads more freedom in arranging the ports is gained, so that it is easy to get triple-ported steam-valves with full effect of all three ports, and double-ported through-

Digitized by Google

passage exhaust-valves. The valve-gear on the cylinder is outlined at II.; and for the admission-valves the idea of a rest during closure with a quick movement for opening is very perfectly applied. The gear is of the individual type, with everything except the main driving-arm 1 inside of a tight casing filled with oil. In this mechanism there is first a "quadric chain" with pieces 1, 2, and 3 as the moving parts (laid out in plan at III.), the oscillating crank 3 turning freely on the valve-stem. The

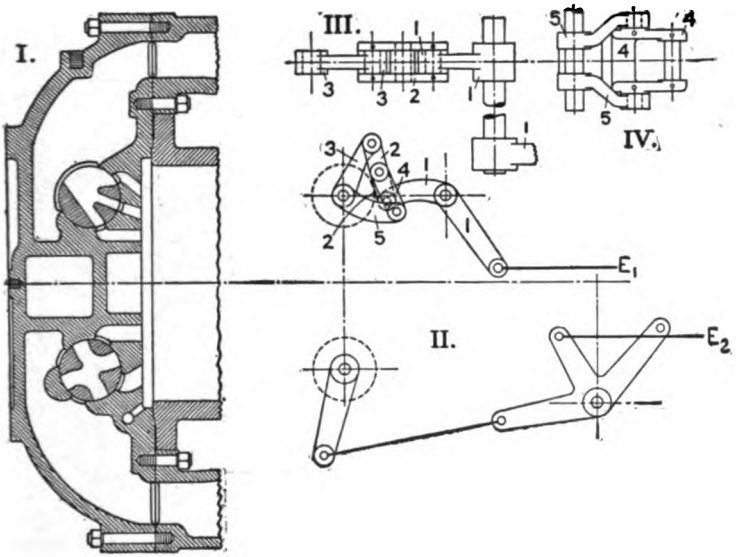

FIG. 494.—Outline of Ball Four-valve Gear.

valve is driven from the middle of link 2, through the pieces 4 and 5 laid out at IV., 5 being keyed to the valve-stem. Each of these pieces is a malleable casting, made up of two links (for the sake of symmetrical force-action) joined by a cross-bar placed where it will not interfere with the movement.

The action of this gear is brought out by Fig. 495. The driving-arm OF is vertical in mid-position, so that OA has a symmetrical oscillation. Equally-spaced positions of the mechanism are plotted, for a range of movement a little greater than the

Digitized by Google

widest actual movement, as indicated by drawing the largest and smallest (reduced) eccentric-circles on OE_1, and projecting to the path of A. The path of C from 1 to 6 coincides almost exactly with a circular arc struck from the highest position of D: and there is therefore, as shown by the curve at II., absolute rest of the valve during nearly half of the cycle-period—this

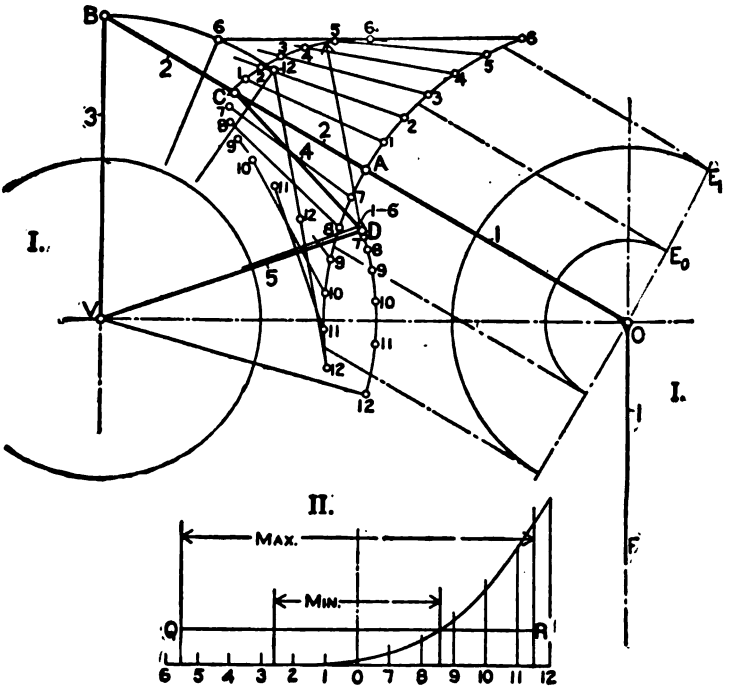

FIG. 495.—Action of Steam-valve Drive.

latter diagram being in the same terms as Fig. 491, with travel of A as base, travel of D as ordinate. For an unbalanced, single-function valve this action is ideal.

(*d*) THE MCINTOSH AND SEYMOUR VALVE-GEAR.—The valve-gear belonging to the engine in Fig. 218, of which some details can be seen on Figs. 264 and 265, is drawn in outline at Fig. 496 I. The main eccentric E_1 acts through the bent rocker-arm ABD

Digitized by Google

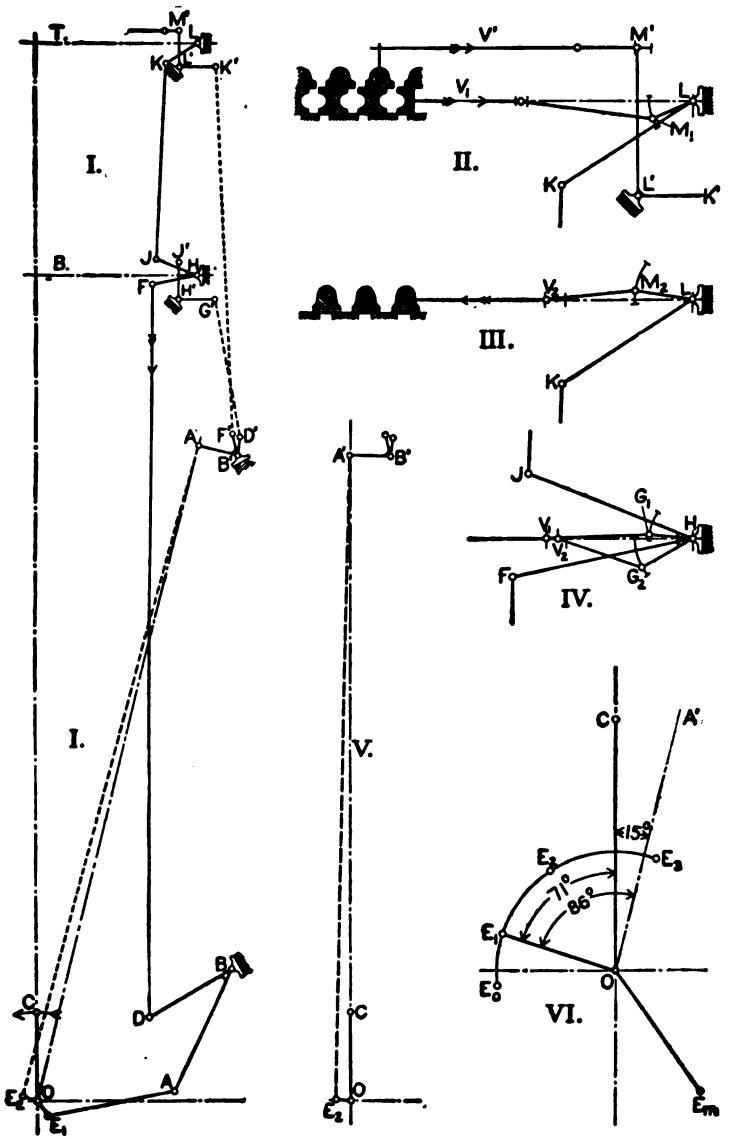

FIG. 496.—Outline of McIntosh and Seymour Six-valve Gear.

Digitized by Google

to drive the main steam-valves and the exhaust-valves, as shown at II. and III., which diagrams are both for the top or head end of the cylinder; while the cut-off eccentric E_2, adjusted by a shaft-governor as at VI., controls the riding cut-off valves. Diagram IV. is an outline of the main valve-drive at the bottom end, V_1 again representing the steam-valve and V_2 that for exhaust. At V. we see how, for convenience in graphical work, the cut-off eccentric and its rod and rocker A′B′ can be brought to a vertical stroke-line without change in effect. The discussion of this mechanism will be chiefly analytical, but in some parts synthetical, with the description of the several diagrams made as concise as possible.

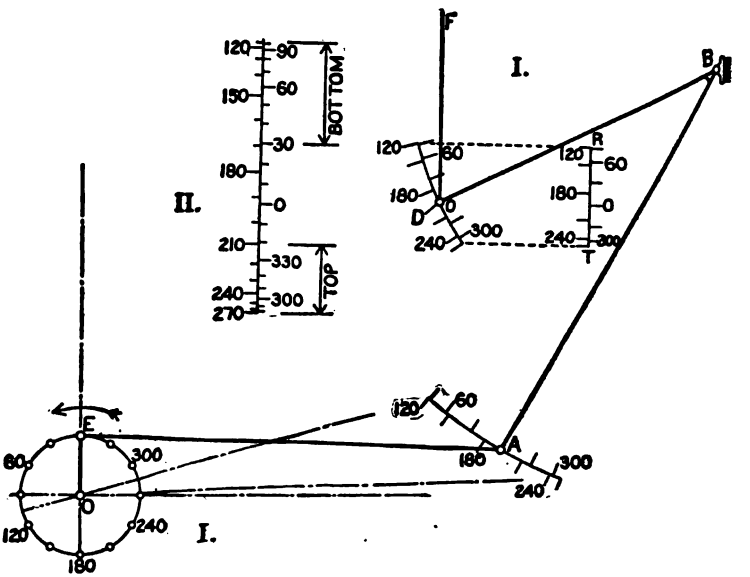

FIG. 497.—Movement of the Main Rocker-arm.

Distortion of Eccentric-movement to Equalize Cut-offs.—At first we shall proceed as if we did not know the proper setting of the eccentrics relative to the crank, plotting in Fig. 497 the movement of the main rocker ABD in terms of the eccentric-angle. This is a marked case of the condition in Fig. 363, and by pro-

Digitized by Google

ng the vertical displacements of the point D upon the line parallel to DF, and then enlarging this travel-scale at II., ind that periods of opening having a considerable difference ngular length can be made to begin at diametrically opposite tions of the eccentric. Thus we might use 20° to 177°, 200° 51°, with respective lengths of 157° and 151°: but these periods longer than is needful for the main valve, and it seems better use 30° to 169° and 210° to 339°, or 139° and 129° respectively the bottom and top—remembering that we must have the ger opening in the bottom or crank end to equalize cut-offs ainst the effect of the connecting-rod.

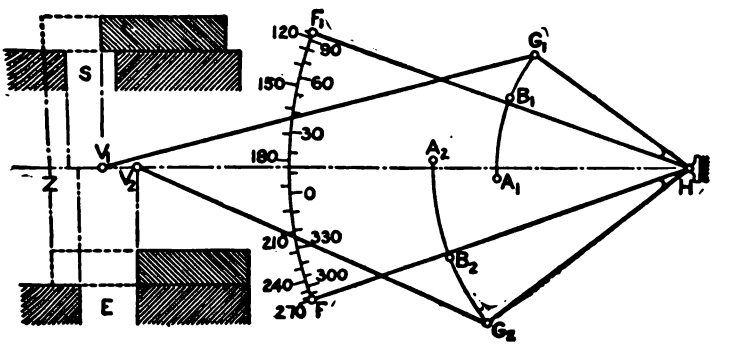

FIG. 498.—Bottom Valve-drives.

The Bottom Valve-drives.—The next step is to proportion the valve-drives for the bottom end of the cylinder, as in Fig. 498, having due regard to maximum lap of valve when closed, time of opening (marked B on path of G), and greatest width of opening.* With the length of HG and GV fixed by approximate trials, we should finally determine the angle between HG and GF which will give HG movement over the proper range—everything being done, primarily, very much by the cut-and-try method. Note that HF is given the same swing up and down from the horizontal, F_1HG_1 and FHG_2 being the extreme positions of this four-point rocker. At IV. in Fig. 496 are seen simultaneous positions of

* It will be necessary to disregard subscripts intelligently in reading this discussion.

Digitized by Google

G_1 and G_2. The results got in Fig. 498 are, that the steam-valve is open from 30° to 169°, the exhaust-valve from 190° to 356° of the eccentric-travel as scaled on Fig. 497 I. Here, as in the next two figures also, the main arm HF is drawn half-size as compared with the rest of the diagram.

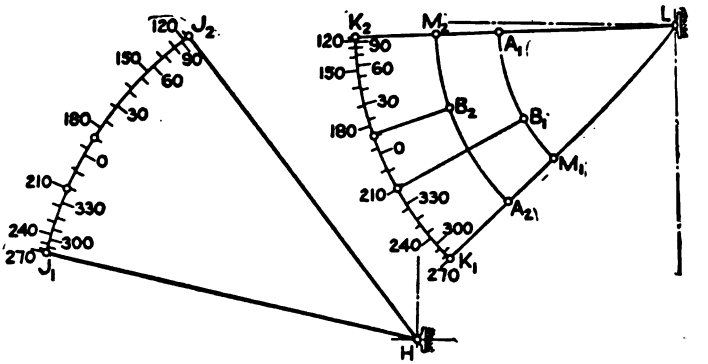

FIG. 499.—Adjusting the Movement of the Top Valves.

The Top Valve-drives.—Now comes a more difficult proposit In Fig. 497 II. it appears that the vertical travel of the rod is much shorter for the period of "top" opening than for "bottom." This was all right for the bottom valves, but n now be reversed for those at the top, if the movements of the sets are to be alike. Fig. 499 shows how this result was obtai after several trials, by swinging the movement-range of H and that of LK down. The arcs $M_1B_1A_1$, $M_2B_2A_2$ are made like $G_1B_1A_1$, $G_2B_2A_2$ on Fig. 498; and then the length of LK the inclinations of the arcs J_1J_2 and K_1K_2 are juggled until a r through B_1 strikes at 210° on K_1K_2 and a radius through 10°—each diametrically opposite to the corresponding begi of opening in the other end. For the preliminary trials of diff proportions, points on J_1J_2 can be projected horizontally to but after very nearly the right conditions are found, actual pl must be done. The form of the top valve-drive is shown i 500, similar to Fig. 498, and giving almost exactly the same action as to the three critical points.

Digitized by Google

(e) MOVEMENT OF THE CUT-OFF VALVES.—Inspection of Fig. 496 will show that the expansion valve can most simply perform its function if given a long "dwell" with its bars nearly over those of the valve-seat, and a quick movement to the right and back at the proper time. This action is secured by oscillating the driving-arms B′D′, B′F′ (on Fig. 496 I.) over an angle-range lying near the dead-point lines B′G′, B′K′, each having, however, a much

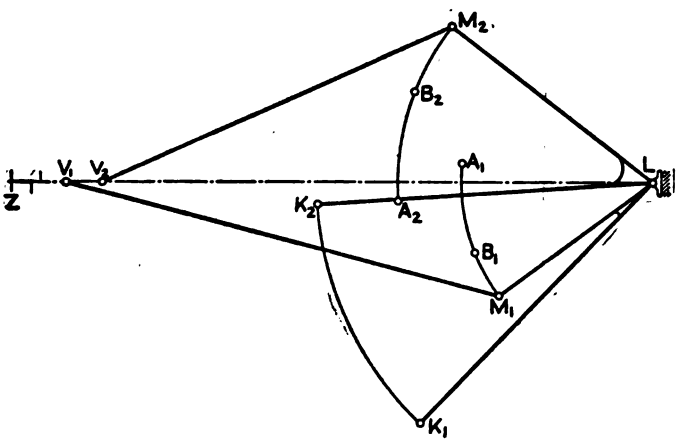

FIG. 500.—Top Valve-drives.

greater swing toward the side for opening. In Fig. 501 we develop a method for plotting accurately and at full size the movement of these valves, with a minimum of work and in a small space.

First of all, a small-scale drawing of the mechanism is made, partly shown by BdgH at I., to give the directions of the rods D′G′, F′K′ (Fig. 496), as at d_1g. Then taking the driving-arm B′A′, we use its half-size length to strike from B the arc A_1A_2; next draw the eccentric-circle to the same scale on OE, divide it as marked, project the divisions horizontally to A_1A_2, and the divisions of this arc radially to D′D′, F′F′, which are struck with the full lengths of the arms BD, BF. These movement-scales are now transferred to the actual paths D_1D_2, F_1F_2, and we are ready to plot the movement of G and K, proceeding as follows:

Digitized by Google

Draw the rod-slant line DG′ for mid-position of D; through D pass an arc DS like GG_1; for any position as D_1 draw the line D_1RS, intermediate in slant between perpendiculars to D_1D' and DG′ respectively; then DS will be the displacement of G_1 from G, at the end of the arm HG, which is the same as the movement of

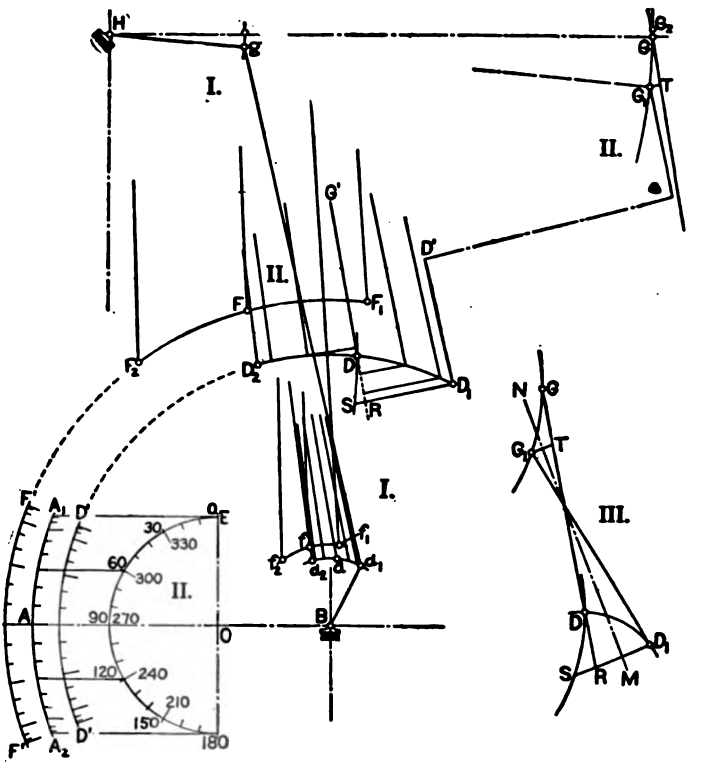

FIG. 501.—Action of the Cut-off Valve-gear.

the valve. To illustrate the equality, we draw GT parallel to DG′, transfer DR to GT, and draw TG_1 parallel to RS. The principle is set forth at III. If MN is a line midway between the two rod-slants, and D_1R and G_1T are perpendicular to MN, we have TR equal to G_1D_1, which is the same as GD, wherefore DR and GT must be equal. On the drawing-board it is easy

Digitized by Google

to give the D_1S lines the proper inclination, without a formal construction such as will be involved in getting MN at III.

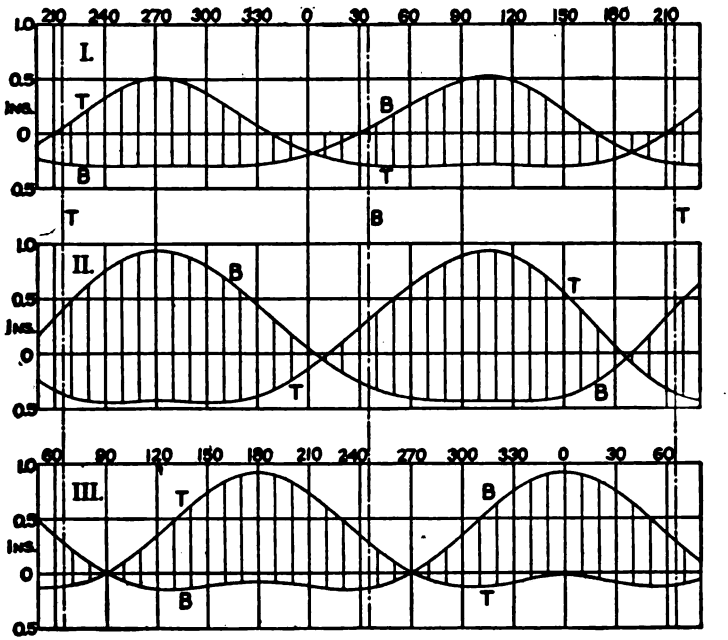

FIG. 502.—Primary Valve-movement Curves.

Curves of Valve-movement are plotted in Fig. 502, set I. for the main-steam, II. for the exhaust, and III. for the cut-off valves—all on the eccentric-angle base with zero at the top dead-center, and with the last set in about the proper relative position. On I. we note the difference of about ten degrees in the two main-valve cut-offs, the base-line representing the line-and-line or edge on edge position of the valve. Further, proper positions of the crank dead-centers are found, that for the top at 215°, that for the bottom at 35° of eccentric-travel. This gives the eccentric-setting in Fig. 496 VI.

The last step is to combine the two sets of steam-valve curves and see how well the variable cut-offs are equalized. The main

Digitized by Google

curves S_T, S_B, and the piston curve P, are obvious. The letter J marks the apex of the top cut-off curve, H that of the bottom curve, at 180° and 0° of the expansion eccentric respectively. Where these curves cut the S curves, going up (valve moving toward right), cut-off takes place. The half-stroke cut-offs C_1, C_2 are exactly equal: at one-quarter (subscript 1) and at three-quarters (subscript 3) there are very slight irregularities. For the earliest cut-off (subscript 0), the actions are quite a little non-

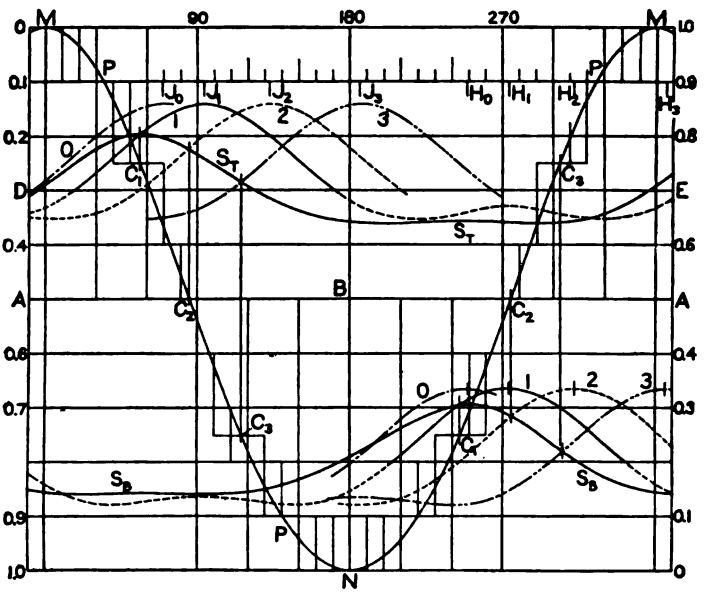

FIG. 503.—Combined Curves of Valve-movement.

symmetrical. From the positions of the several J's and H's it is easy to trace out the eccentric-settings shown at Fig. 496 VI. Thus J_1 shows that the crank will be at 94° when the eccentric is at 180°, or that the eccentric is 86° ahead of the crank: and the slant of the rod changes this to an actual angle of 71°.

These results do not represent quite the best that is possible with this gear. By carefully adjusting the several elements, even more symmetrical action can be got than is shown in Fig.

Digitized by Google

503. Enough has been given, however, to illustrate the possibilities of this type of mechanism and to set forth pretty clearly the methods to be followed in designing and discussing it. This appears to be about the ultimate case under the general idea of distorting from symmetry the simple harmonic motion given by the eccentric.

§ 59. Lift-valve Gears.

(*a*) DIFFERENT FORMS OF THE LIFT-VALVE.—The three typical forms of the valve which opens by lifting from the seat are shown in Fig. 504; all are double-seated, and are so arranged as to be

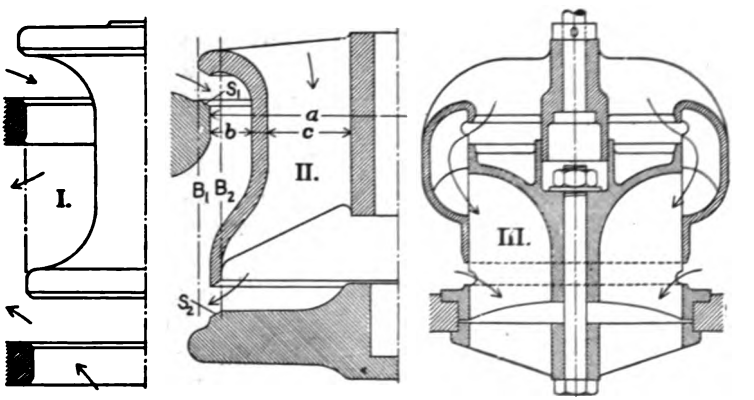

FIG. 504.—Different Types of the Two-seated Valve.—I. Poppet Valve, from Figs. 505 IV., 509; II. Hollow valve, from Fig. 267; III. Bell valve, as in I. and III., Fig. 505.

nearly balanced, only an annulus equal to or slightly exceeding the combined width of the two contact-surfaces being subjected to downward pressure when the valve is closed. The solid double-disk or poppet valve at I. is simplest in form, but requires more complication in the valve-chamber, because the steam coming to it must be given access to both top and bottom by means of passages formed in the casting: for a given diameter, however, it has a larger capacity than the valve which receives steam from the top only. Type number II. is the most usual valve in German

Digitized by Google

stationary practice, where the lift-valve so largely prevails. The dimensions marked on the figure suggest that the effective opening is determined by the diameter *a*, being the area of this circle less the cross-section of the valve-casting; and that the annular passages of widths *b* and *c* should be given equal areas, so as to permit equal flow from or to the two openings. Type III. is derived from II. by a kinematic inversion, the valve in one case corresponding in essential form with the seat in the other: it has the advantage that fitting the valve-seat into the cylinder is a much simpler matter than with the double-contact arrangement in Figs. 267, 508, and 509; but it appears to require rather more room, so that the volume of the cylinder-clearance will be greater.

These valves as well as the inserted valve-seats are made of hard cast iron. The contact-strips or seats are narrow, ranging, with the size of the valve, from one-eighth to one-half inch in width; they vary from a 45-degree cone as in I. to a plane surface as in III. An example showing a different direction of slant at the lower seat is given in Fig. 504 II. Almost always the valves are arranged to lift in opening, although engines have been built in which some of the valves open downward and are held up by springs.

Sometimes single-disk poppet valves are used in the low-pressure cylinders of pumping engines. Thus the triple engine whose diagram is given in Fig. 606 I. has these valves for exhaust on the L.P. cylinder; and the quadruple of Fig. 607, with eight sets of valves in all, has single-disk valves for the last three.

For some large engines four-seated poppet valves have been used successfully.

(*b*) VARIOUS LOCATIONS AND ARRANGEMENTS OF THE VALVES.—Fig. 267 is typical of best and most recent practice in horizontal engines. Quite often, however, the valves are placed at the side of the cylinder, either one above the other in pairs as in Fig. 505 I., all four in a row on one side, or two on each side. On a vertical engine the upper valves are best placed in the cylinder-head, as in II., but those at the bottom are nearly always on the side of the cylinder: the arrangement in Fig. 505 III. is used at both ends of the cylinder to which it belongs. The last example in

Digitized by Google

Fig. 505 is from the head-end of the cylinder, but the arrangement at the other end is just the same, except for the small difference in detail at the center, where a passage must be formed

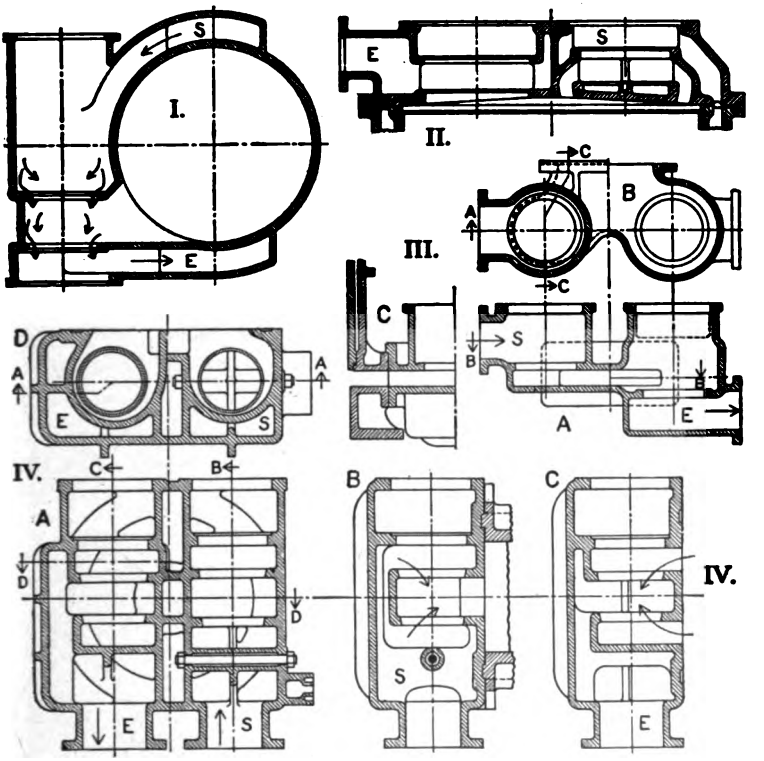

Fig. 505.—Different Arrangements of Lift-valves upon the Cylinder.—I. to III. German designs: I. Low-pressure cylinder with bell valves on same axis serving one port; II. Hollow valves in head of vertical high-pressure cylinder; III. Bell valves on side of vertical cylinder, placed side by side in a separate casting and serving one port; IV. Poppet valves in heads of high-pressure cylinders of large engines like Fig. 219, as built by the Allis-Chalmers Company for the New York Subway Power House.

for the piston-rod. These examples give a fair idea of the range of practice; for fuller information and detail the reader is referred to engineering periodicals or to Leist's *Steuerungen für Dampf-*

Digitized by Google

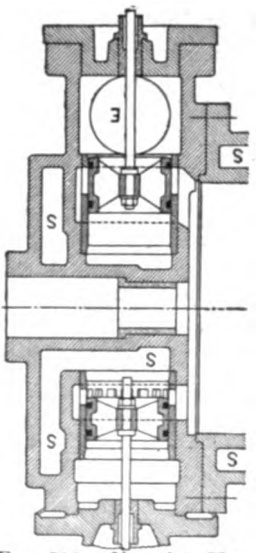

FIG. 506.—Van den Kerchove Piston-lift Valves.

Maschinen—this remark applying also to the valve-gear discussion which follows.

A rather recent development along this line, shown as a novel design at the Paris Exposition of 1900, is the use of piston instead of seated valves in an arrangement otherwise like that which has long prevailed for lift-valves. From the point of view of one trained to the Corliss type for releasing gears, it is a decided advantage not to have to bring the valve to rest exactly at a certain level (against the seat) without shock. These piston-valves open at only one edge, but with the greater facility for absorbing their momentum quietly they can be lifted higher and dropped at greater velocity than the double-opening poppet valves. The external rigging is essentially the same as for the latter type of valves.

(*c*) GENERAL ARRANGEMENT OF THE VALVE-GEAR.—With the valves located as in Fig. 267, the gear at the cylinder takes the form outlined in Fig. 507, the manner of driving the gear-shaft being indicated at II. Details of this particular gear are given in Figs. 508 and 510 III. As to the setting of the eccentrics, that for the steam valve must be only far enough ahead of the crank to take up the over-travel of the latch and give the desired lead when the crank is on dead-center. In Fig. 507 III. the crank is shown as if upon the valve-gear shaft and at dead-center, and δ_1 as marked measures

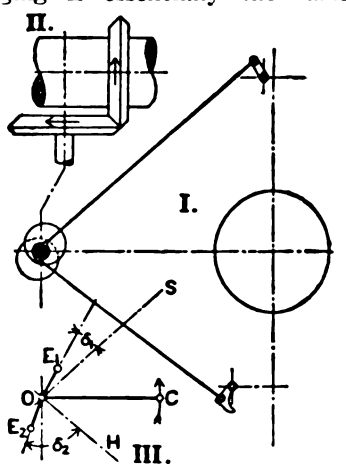

FIG. 507.—Outline of Gear at Cylinder; General Arrangement as in Fig. 267.

Digitized by Google

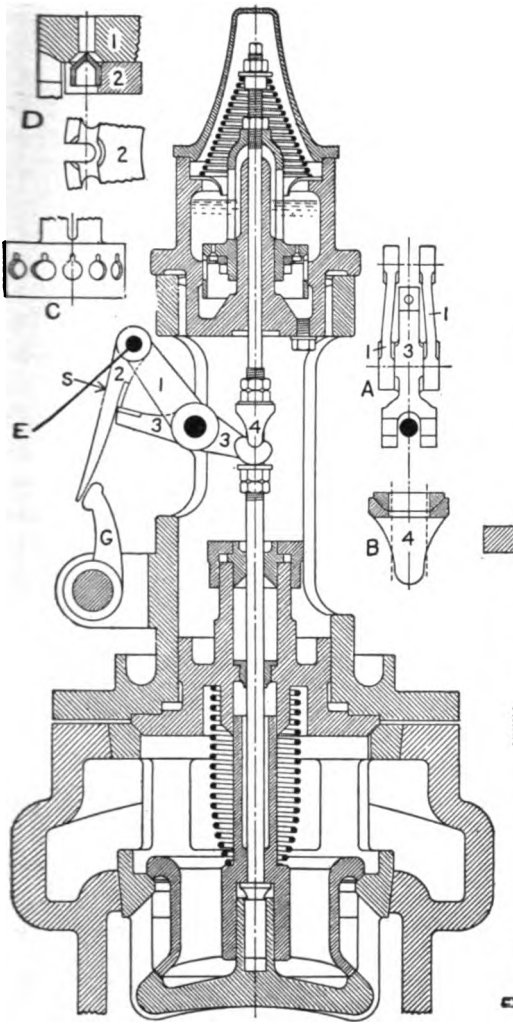

FIG. 508.—The Collman Releasing-gear, High-pressure Cylinder of Compound Engine. Scale 1 to 8.

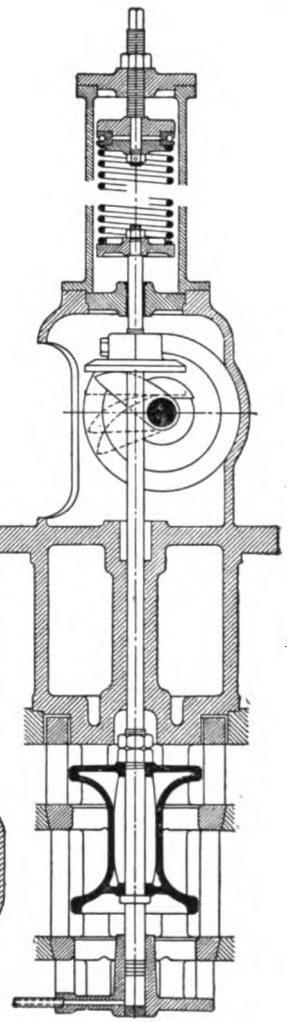

FIG. 509.—Detail of Steam-valve and Gear, 42″×60″. Cylinder shown in Fig. 505 IV. Scale 1 to 18.

Digitized by Google

the eccentric-angle, from the respective stroke-line OS. The exhaust-eccentric OE_2 has the same angle of advance as for a Corliss engine—somewhere near 20 degrees.

(*d*) ADMISSION-VALVES WITH RELEASING-GEAR.—A first-rate German design is shown in Fig. 508. With the help of the detail at A, the arrangement of the driving-mechanism is clear; at B we see how piece 4 is made free to oscillate with the swing of 3. The forces which act to close the valve are the weight of all the parts attached to the valve-stem and the push of the lower spring, here placed in the steam-space. A rapid diminution of this force as the valve nears its seat is secured by the use of the lighter counter-spring at the top; and the movement is checked by an oil dash-pot, which has its plunger formed as better shown at C. The large holes let the oil pass freely while the valve is up, but only a small opening is effective when the valve is close to the seat. To avoid having the same oil-resistance at the beginning of the rise as at the end of the drop, a number of small check-valves are placed in a circle in the disk of the plunger, being made somewhat as suggested by the sketch at D. Air dash-pots are sometimes used, and it will be noted that the lower end of the valve-stem and guide on which the valve-hub slides will act as a small dash-pot with steam. As remarked under Fig. 267, to bring the drop-valve quietly and yet quickly to its seat is a more delicate task than the closing of the Corliss or other sliding cut-off valve.

In Fig. 509 the valve is raised by a rocking cam, carried on a spindle which is oscillated and released by the usual Corliss gear, with the dash-pot on the side of the cylinder. The cam is forged solid with the spindle, and is forked so as to bear under the collar on both sides of the valve-stem. Here the space under the lower end of the valve-stem is relieved to the atmosphere, so that the steam may not get under it and tend to lift the valve.

(*e*) GEARS WITH ROCKING CAMS.—For the admission-valves of low-pressure cylinders (with constant, late cut-off) and for exhaust-valves in general, the desired movement can be very effectively obtained by means of some form of rocking cam or lever. Thus the exhaust-valves that go with Fig. 509 are lifted by a cam of the same shape; and the dotted outlines show how the body of

Digitized by Google

the cam swings down from the collar on the valve-stem after closure. This same idea, of letting the cams swing clear during valve-closure, is further illustrated in Fig. 510 I. and II. In lifting the valve receives a quick acceleration, then a steadier, rapid movement. Note the toggle-joint drive for the steam-valve in I. At III. we see a rotary oscillating cam, which has the same

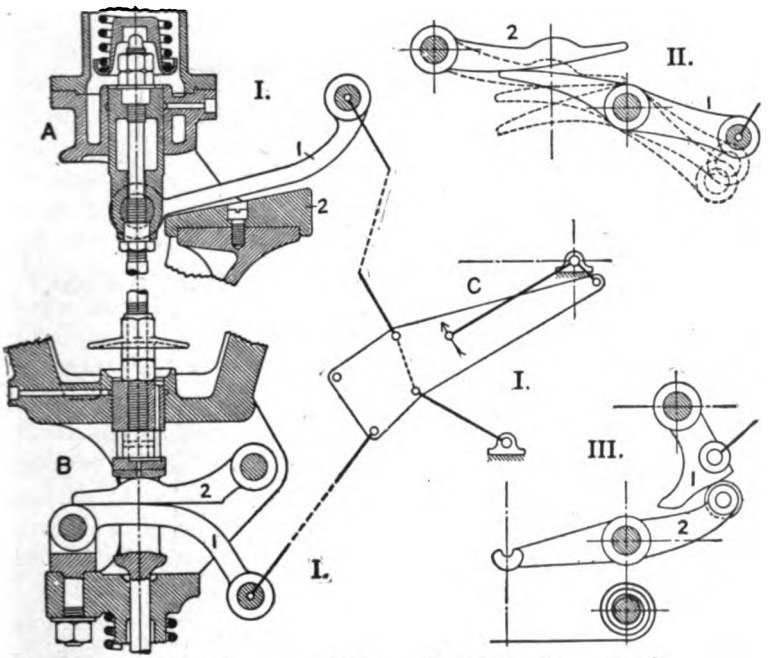

FIG. 510.—Rocking Levers and Cams.—I. Both valves of a low-pressure cylinder, with the eccentric drive; II. Another exhaust-valve gear; III. Oscillating cam and roller, with Figs. 507 and 508. Scale 1 to 12.

kind of movement as those which precede, but in the form and manner of action of its working-surface resembles the rotating cams in Fig. 511.

(*f*) LINKAGE GEARS, WITH POSITIVE MOVEMENT.—There are a number of designs, mostly German, of gears with the general arrangement in Fig. 507, but with a more or less complicated kinematic linkage between the eccentric and the valve, including

Digitized by Google

some scheme for varying the cut-off. These mechanisms show great ingenuity, the difficulty of the problem being much increased by the requirement that the valve must rest during closure, or that a movement-curve like that in Fig. 495 be secured. They are not, however, of sufficient importance to be given here the full illustration that would be required, and the reader is referred to Leist for fuller information.

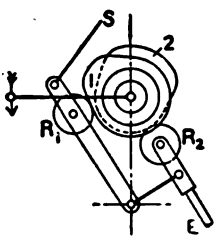

FIG. 511.—Cams on the Side-shaft.

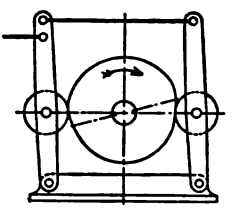

FIG. 512.—A Positive Cam-gear, Leavitt Pumping-engine.

(*g*) ROTATING CAMS.—Fig. 511 is typical of a large number of gears, mostly belonging to earlier practice and used at moderate speeds. With this device it is easy to secure quick movement in opening and closing, with periods of rest between the movements; but care must be taken not to form the profile so as to require too sharp accelerations where the movements begin and end. The valves are moved by single levers, such as would be formed in Fig. 508, for instance, by locking pieces 1 and 3 together: and the springs, arranged as in Fig. 510 I., must be strong enough to carry the weight of all the rigging out to the rollers, besides furnishing the force needed to insure continual contact of the rollers on the cam.

A scheme for making the cam-gear positive, so as not to need weights or springs, is indicated in Fig. 512. This particular case, with two rollers bearing on one cam, can be used when the valve is to be open during half a revolution; for shorter periods, there must be two cams, side by side on the shaft, one designed so as to give the desired movement, the other then made to complement it and always fill the space between the two rollers. This gear

Digitized by Google

is used, however, not with lift-valves, but with gridiron slides like those in Fig. 264.

To get variable cut-off with rotating cams, these are made in the form shown in Fig. 513, and best seen in the developed outline at B. In this case two cams are placed on the same sleeve, so as to reverse the engine; and levers 2 and 3, which work the valves at the two ends, are brought into the same plane, so as to be operated by the one set of cams. This gear, belonging to a hoisting engine, has the sleeve shifted endwise by hand; but in non-reversible engines the sleeve can be moved by a governor.

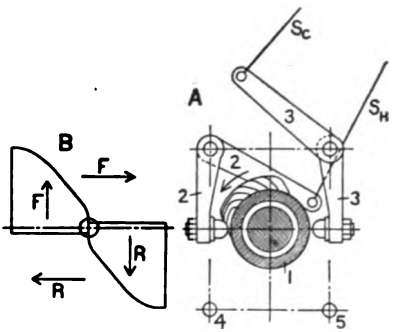

FIG. 513.—A Cam-gear which Varies the Cut-off and Reverses the Engine.

§ 60. Valve-gears for Engines which have no Crank-shaft.

(*a*) THE DUPLEX STEAM-PUMP.—As to its valve-gear, this is the simplest engine that can be found under the above general title, because the valves are moved directly by the pistons, through the medium of plain oscillating levers which merely reduce the movement without changing its character: but to make this scheme work successfully, it is necessary to have each piston move the valve that controls the other cylinder. It will be noted from Fig. 514, and can be seen on Fig. 226, that one of the levers gives a direct movement to the valve, the other reverses the piston-motion—the two being proportioned so as to give the same ratio of reduction. That this is necessary can be most easily understood by a simple analysis of the movements.

In Fig. 515, A marks the right side, B the left side. For position I., with piston A just reversing at left end of stroke, valve B (driven by arm A) is likewise at the left, port B is wide open at the right end, and piston B is moving from right to left; but in order that piston A shall presently move to the right, valve A

Digitized by Google

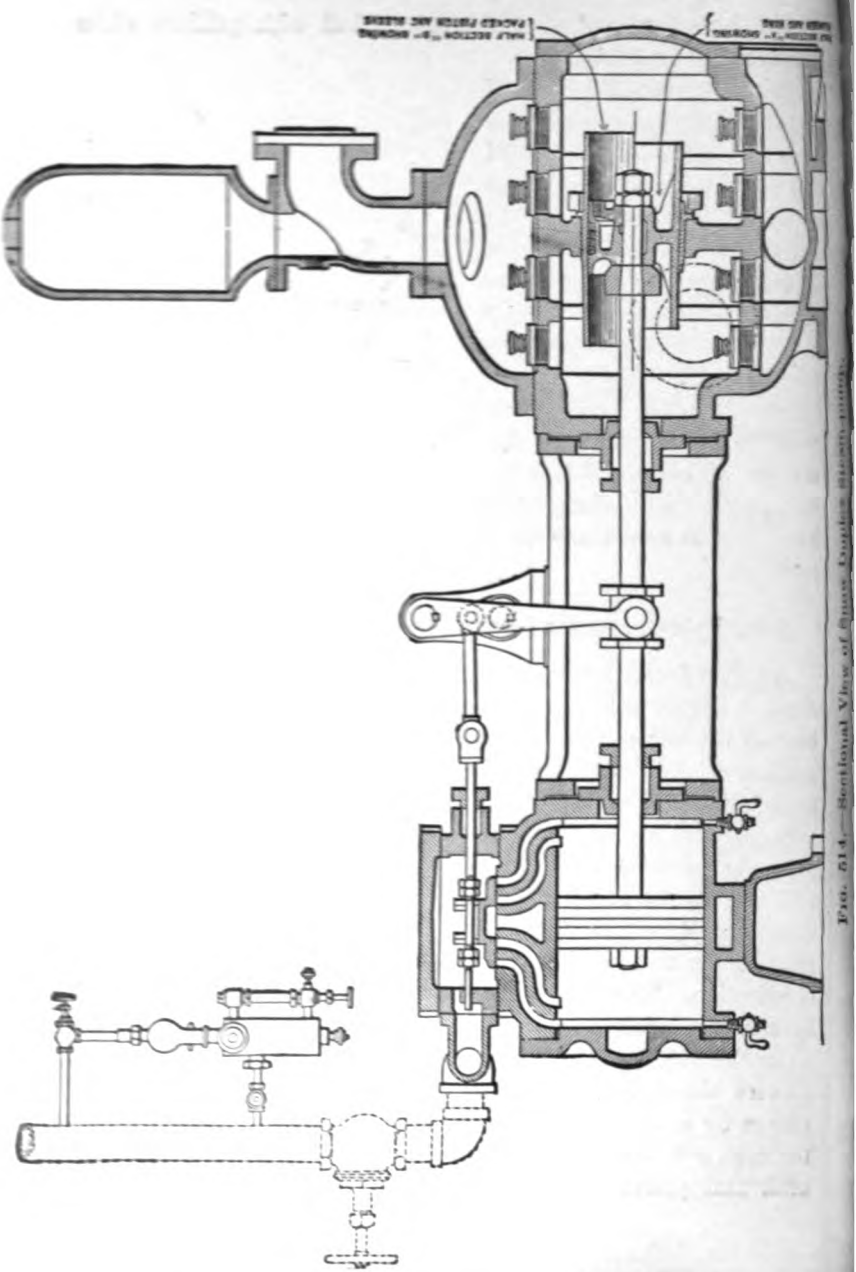

FIG. 514.—Sectional View of Snow Duplex Steam-pump.

Digitized by Google

must move to the right ahead of it, wherefore valve A must have a movement opposite to that of piston B. Following through the

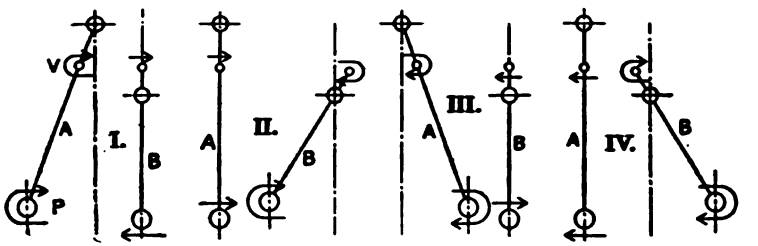

FIG. 515.—Valve-movement in the Duplex Pump.

other three critical positions, and noting the directions of movement as indicated by arrows, we see that piston A leads, reaching any position half a stroke (one-quarter of the cycle) ahead of B.

Although moved by the pistons, the valves are not closely driven, but there is always some lost motion between the rock-levers and the valves. In Fig. 514 this clearance or back-lash is permitted at the nuts on the valve-rod, on each side of the valve; on larger pumps, as in Fig. 226, the same effect, with easier access, is provided for at the outer end of the rod. With positive connection, the valves would move too soon, so that the pistons could not make full-length strokes. Valve-setting in a pump like this consists in putting the pistons at mid-stroke and the valves in mid-position, and then making the rod-clearances the same on both sides; minor adjustments may be found necessary after the pump is started, the object being to secure equality in the two strokes.

Fig. 514—with confirmation from examples that follow—illustrates the fact that the steam-valves in engines of this class are made with zero lap. In this case we see also the use of two ports at each end, the outer one for live steam, the inner for exhaust. By thus having the exhaust-port open into the cylinder at some distance from the head, a cushioning effect is secured, independently of the

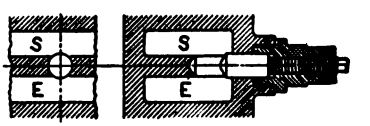

FIG. 516.—The "Dash-relief" Valve.

Digitized by Google

valve-action, which will prevent the piston from striking the cylinder-head. In order that this effect may be regulated at will (because less cushioning is needed at low than at high speeds), pumps of the larger sizes have stroke-regulating or cushion valves, arranged somewhat as shown by the sketch in Fig. 516. This valve varies the size of an opening through the wall between the two ports, permitting more or less exhaust through the outer part. Opening this valve lengthens the stroke, and *vice versa*.

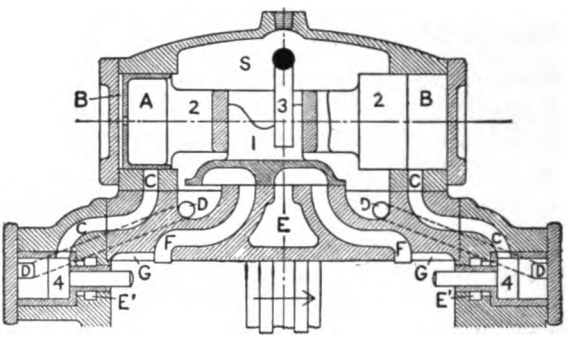

FIG. 517.—Valve-gear of the Cameron Simplex Pump.

(*b*) STEAM-ACTUATED VALVES.—Duplex steam-pumps of all makes follow closely the original Worthington design; but single pumps show quite wide variations in their valve-arrangement. One typical example is given in Fig. 517, where the small primary controlling valves 4, 4, are moved directly by the piston as it comes to either end of its stroke. As in every case, the main valve 1 is actuated by a double plunger 2, which is controlled by variations of pressure in the end spaces B, B. Through the end of each hollow plunger is a small opening A, for the passage of full-pressure steam from the main steam-space S. At the inner side of each valve 4 is a passage E′ which leads to the main exhaust-port E: and these valves are kept shut (pushed in, toward the cylinder) by the full steam-chest pressure, continually admitted through the ports D, D. Suppose now that the piston, coming to the right end of the stroke, pushes out valve 4; there is an imme-

Digitized by Google

diate exhaust from the right end-space B, the steam escaping much more rapidly than it can get in through A; the result is that 2 is quickly pushed toward the right, but with a movement that is checked both by cushioning in front and by a drop of pressure in the left end-space B. Through the openings A, A, pressures are soon equalized, and the plunger is held fast by the friction of the valve until the piston gets to the other end of the cylinder. Note how far in from the cylinder-heads the openings of the main ports F, F, are placed, in order to insure a strong cushioning effect: the small grooves G, G, are not sufficient to mar the cushion, but make it certain that the piston shall not get stuck when just clear of the stem of valve 4. The starting-lever 3 is worked by an external handle, and can be used for moving the valve when starting the pump if it does not move off freely without help.

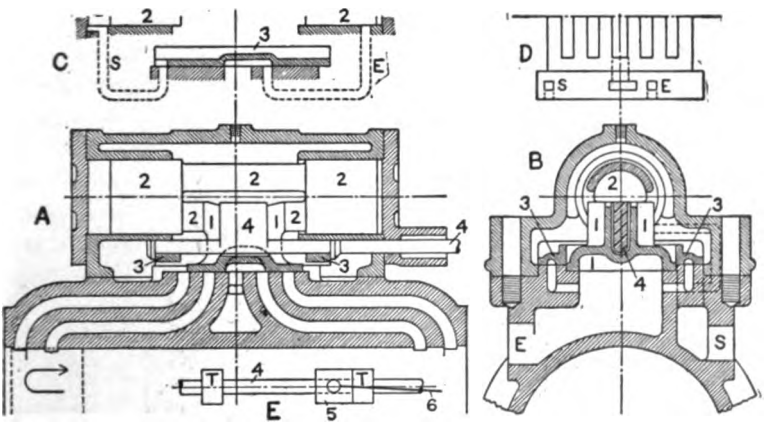

FIG. 518.—Valve-gear of the Deane Pump.

A majority of the valve-gears of this class is represented by Fig. 518, where there is a light auxiliary slide-valve 3—in shape a hollow rectangle surrounding the main valve—which controls ports leading to and from the spaces at the ends of 2. A plan of half the valve-seat is given at D, the other half being just the same, but with the small ports S and E reversed end-for-end. The arrangement of these ports is diagrammed at C, where the

Digitized by Google

reason for having a separate steam- and exhaust-port for each plunger is made apparent, in that the steam-port is carried clear to the end of the chamber, while the exhaust-port is kept in, so as to insure cushioning: except for this, a single pair of ports, with an outlet to the main exhaust between them, would be enough. The valve-rod 4, moved by an indirect rocker-arm through the link 6 (see view E), has a rectangular projection within the valve: ordinarily, this does not quite touch slide 2 before the latter moves; but if the movement is retarded for any reason, this projection will start the main valve by a direct push. Note the large amount of clearance between the slide-block 5 and the tappets T, T, on the rod 4: as in every gear of this sort, the movement of the small valve must not take place until the piston approaches the end of its stroke.

Besides several gears which differ from this only in secondary points, there is one (the Knowles) in which the plunger 2 itself acts as controlling valve also, being given a slight rotation on its axis by the external gear, so as to open and close the small ports to the end-spaces at the proper time.

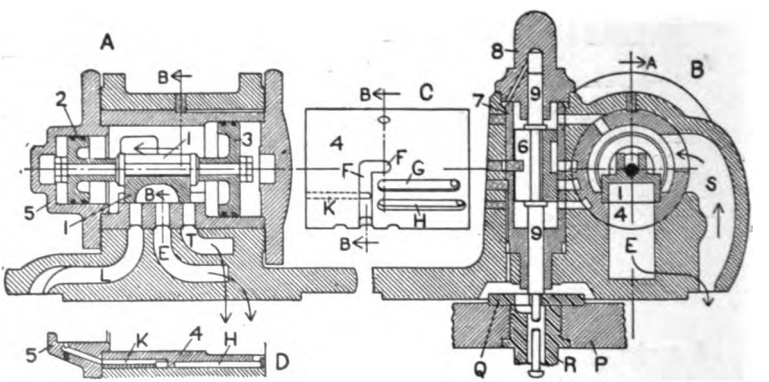

FIG. 519.—Valve-gear of the Westinghouse Air-brake Pump.

(*c*) THE WESTINGHOUSE AIR-BRAKE PUMP.—A valve-gear of the general type just presented, but with a number of special features, is illustrated in Fig. 519. The pump is always vertical, and the

Digitized by Google

whole valve-gear is carried upon the top cylinder-head, so that the controlling-valve 6 can be moved by the light rod 9 and is given a slight movement as the piston nears each end of the stroke. The several ports, T for the top end, L for the bottom end, and E for exhaust, are carried through the head-casting and down the side of the cylinder as necessary.

The lengthwise section, view A, shows the main valve 1 and the controlling slide, with two unequal pistons 2 and 3. By the action of the secondary valve 6, steam is alternately admitted to and exhausted from the space at the right of piston 3; the space at the left of 2 is always open to the exhaust, through the small passage K, shown in view D and partly indicated on C. The diameters are in such a ratio that the area of piston 2 is one-half that of 3, which gives the same driving-force in both directions.

The arrangement of the small ports from valve 6 can best be seen on the outside view of the main valve-bushing, at C: H is the steam-port, carried nearly to the end of the casing, and on the inside extended by a notch, as shown at D; G is the exhaust-port, stopped short so as to insure cushioning, after the usual manner; and F is a small passage leading to the main exhaust. Valve 6, rounded to fit bushing 7, is in effect a common slide-valve (not balanced), and is surrounded by steam of full pressure. Raising this valve (as in the drawing) admits steam back of piston 3, pushes valve 1 to the left, opens the main port T, and drives the engine-piston down. lowering valve 6 shuts off steam from port H and connects G to F, whereupon the excess of internal pressure upon 3 moves the slide to the right, and prepares for the up-stroke of the main piston.

(*d*) Indicator Diagrams from Steam-pumps.—The duplex pump gives, when working properly, a steam-diagram that is almost a perfect rectangle, corresponding in general shape with the rectangular diagram that can be taken from the water end. The example at I. in Fig. 520 is from a compound pump, similar to Fig. 226. to find the driving-force, the effective pressures would have to be reduced and combined as in Fig. 144. Since the mass of the moving parts is insignificant, it is essential that the driving

Digitized by Google

steam-force shall always keep close to the resisting water-force, if the motion is to be smooth.

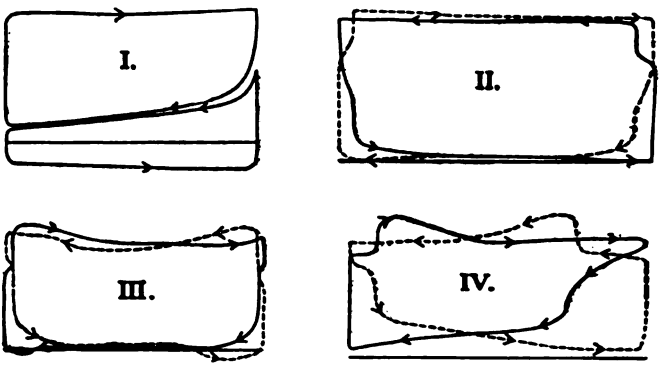

FIG. 520.—Indicator Diagrams from Steam-pumps.

The remaining diagrams in Fig. 520 are from single pumps; and in all of them is shown a peculiar action due to the inertia of a long column of water in the discharge-pipe. While the pump is pausing, at the end of the stroke, the water keeps on moving, and gets away from the water-plunger, at least to the extent of greatly decreasing the reaction upon this plunger; then when steam is admitted, the piston gives a little jump until checked by the water. As soon as it is thus checked, the entering steam has a chance to rise to full pressure and the escaping steam to fall to (or toward) exhaust pressure, and the real working stroke begins. This action is most marked in IV., where, at the right end, the forward pressure (dotted) is at first less than the back-pressure, making it look as if the plunger was, through a short distance, dragged or sucked after the water. Examination of any of these diagrams shows that after the full driving-force is established, it remains nearly constant throughout the stroke. The peculiar exhaust-lines in III. are due to the fact that the exhaust-pipe of this mine-pump discharges into the water of the "sump" or suction-pit.

With these water-velocity effects minimized, the single pump tends to give a simple rectangular steam-diagram. It must be

Digitized by Google

understood that the air-chamber on the discharge-pipe has a large share in the hydraulic force-action above described.

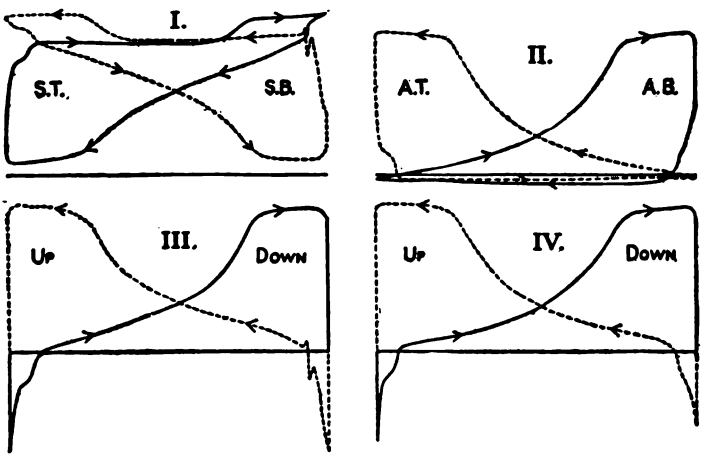

FIG. 521.—Pressure Diagrams from the Air-brake Pump.

When the resistance is not constant, but increases along the stroke, the steam-diagram takes the peculiar form shown in Fig. 521, where I. and II. are corresponding diagrams from steam-end and air-end, brought to the same scale of pressures. Considering simultaneous lines of forward-pressure and back-pressure in I., we see that a small driving-force at first is secured chiefly by throttling the exhaust; instead of taking place while the piston is at or near the end of its stroke, the release (with drop in pressure) is distributed along a good part of the return-stroke. As the air-resistance increases, the piston, which started off rapidly, slows down; and during the expulsion of the compressed air the two steam-pressures are nearly constant at their maximum and minimum values. Diagrams of effective driving-force and effective resistance are plotted at III. and IV., from I. and II. respectively, to show how very closely the two force-actions agree, there being between them only the small differences needed to accelerate the pistons.

This action is characteristic also of the low-pressure compressors

Digitized by Google

used as "air-pumps" on condensers. An essential point in the proportioning of the valve-gear is the use of very small ports. In Fig. 519, for instance, with a piston 9½" in diameter, the port-openings through the valve-bushing are only ⅜" by 1½"; or the ratio of port-area to piston-area is about 1 to 130, as against perhaps 1 to 10 in an ordinary engine. It need hardly be remarked that such conditions of working as are shown in Fig. 521 do not tend toward economy of steam.

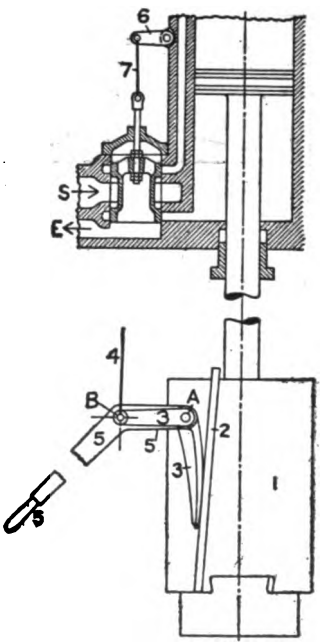

FIG. 522.—Valve-gear of Bement and Miles Steam-hammer.

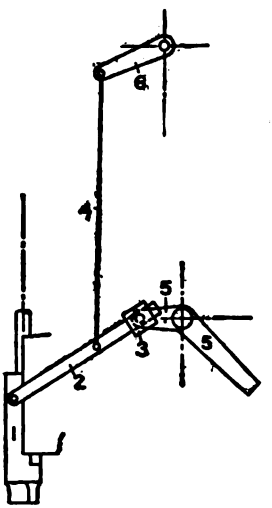

FIG. 523.—Steam-hammer Valve-gear with Oscillating Lever.

(*e*) VALVE-GEARS FOR STEAM-HAMMERS. — In this type of machine, with a very heavy reciprocating mass, it is entirely possible to drive the valve from the main piston: but with the automatic movement is combined an element of hand-control, which is in more or less continual use during the operation of the

Digitized by Google

hammer. In Fig. 522, for instance, the hammer-head 1 carries an inclined slide-bar 2, which acts upon the cam arm of the bell-crank rocker 3, so as to oscillate this rocker as the hammer moves up and down. Through the rod 4 and rocker 6 (rod 4 takes hold of an arm on 6) the valve is given a considerable movement, but not enough for full-stroke working of the hammer. To get a piston-movement of variable length and intensity, hand-control through the lever 5 is added: this lever is pivoted on the frame at B, and carries at A the pivot of rocker 3. Simply to change the fixed position of 5 has the effect of changing the length of the valve-rod, raising or lowering the mid-position of the valve. Moving 5 with each blow supplements the automatic component of the valve-movement. It can easily be seen that raising the handle will lift the hammer and vice versa. In the figure, everything is drawn in mid-position. The valve must have some lap, not be made like the pump-valves just discussed; but this figure is only a sketch, intended to show form rather than proportions.

It is obvious that a machine of this class will be subjected to severe shocks, so that as little as possible of the valve-gear should be fastened to the hammer. Some designs, however, have an oscillating lever jointed at one end to the hammer-head, as in Fig. 523. In this case the valve, actuated by arm 6, is a D valve in effect but oscillates on a curved seat. Both the hammers here shown are double-acting, receiving steam on the top of the piston to increase the force of the blow: but many large machines use the steam for lifting only. Always, the operator has one hand on the main-valve lever, the other on the throttle-valve, so as to regulate the supply of steam as well as the working of the engine-valve.

(*f*) The Self-centering Valve-gear.—In certain regulating or controlling devices, such as reversing-gears for large engines and the like, it is desired that the piston shall follow a primary controlling lever, coming to rest at a point in its stroke similar to the position of this lever on its range of movement. Several devices of this sort are illustrated and described in § 65. Briefly stated, the principle of these gears is as follows:

The slide-valve is normally at mid-position, the piston being

Digitized by Google

at rest. To move the piston, the valve is drawn to one side by moving the control-lever; but as the piston advances it operates a secondary mechanism which brings the valve back to mid-position. The farther the hand-lever is displaced, the farther must the piston move in order to center the valve and again bring itself to rest.

Digitized by Google

CHAPTER X.

GOVERNORS OR REGULATORS.

§ 61. Types of Rotary Governors.

(*a*) GENERAL CLASSIFICATION. — The two common types of speed-regulators have already been described as to general form and operation, the fly-ball governor in § 56, the shaft-governor in §§ 2 and 48. The essential difference is, that in the first type the governor-mechanism has its working movement in a plane that passes through the axis of rotation and turns about that axis; while in the second type the mechanism works in the plane of rotation, this plane being perpendicular to the axis of the shaft. Then the fly-ball governor is operated wholly by centrifugal force, because the inertia-forces due to a change in the speed of rotation, being perpendicular to the plane of the mechanism, can have no component to influence the movement of the latter; but in the shaft governor this kind of inertia may play an important part. Differences in the way that the governor takes hold of and controls the valve-gear are of less importance than might at first sight appear.

(*b*) FUNCTIONS OF THE GOVERNOR.—These can be most clearly set forth by stating that in the study of the action of the governor two main questions are to be considered. The first is the question of "regulation", or of the manner in which the speed in steady running varies with the load; the second is concerned with "adjustment", or with the behavior of the governor while in the act of accommodating the engine to a change of load: involved in both, and by no means of subsidiary importance, is the question whether the governor will hold steadily the position corresponding

Digitized by Google

to a constant load, without yielding unduly to the action of secondary disturbing forces. By "close regulation" is meant that the whole range of load is covered with only a small change in speed—this change being normally a decrease as the load increases. An ideal governor, while steady under constant load, would respond at once to any change in the main controlling forces, following the load to the new position of equilibrium and stopping there, without superfluous movement on its own account. It is desirable that the actual governor shall regulate as closely as is consistent with steadiness, and shall adjust quickly and positively; but generalizations as to realized or possible performance will be deferred until we have made a pretty close analysis of several typical governors.

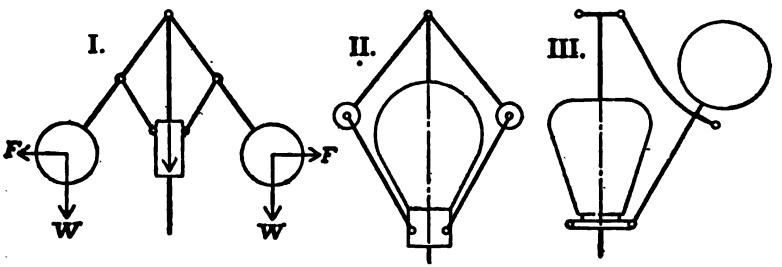

FIG. 525.—Types of the Fly-ball Governor: I. Common Low-speed Governor; II. High-speed Governor, Weight-loaded; III. The Proell Type.

(*c*) VARIOUS FORMS OF THE FLY-BALL GOVERNOR.—Three typical designs are outlined in Fig. 525, all weight-loaded, or with gravity as the force that acts against the centrifugal force of the balls. The first corresponds with Fig. 461 and is of the slow-running, self-balanced type, the weight on the central slide being small in comparison with that of the balls themselves. At II. is seen the high-speed governor, as in Fig. 489 and on Figs. 209, 212, 213; this governor is given a high rotary speed, and most of the counterforce is furnished by the central weight. Type III. is much used by German builders; the effect of thus placing the ball on another link of the mechanism will be discussed farther on. Sometimes fly-ball governors are loaded by means of springs instead of weights, or to supplement the weights, especially in the

Digitized by Google

ller types used on throttling engines: with full spring-loading rotation-axis can be placed horizontal if more convenient.

d) FORCE-ACTION IN THE SHAFT-GOVERNOR.—The very simple f forces in the fly-ball governor is graphically represented on 525 I.: in steady running there is equilibrium; in adjustment entrifugal force changes, and the difference between its actual at any instant and that required to balance the weights is ree force which is available to move the governor. The ous forces in the shaft-governor are shown on Fig. 526 I., the weight-arm AG is pivoted at A and rotates about the enter O, and the spring-force S takes the place of weight- For this piece alone, the condition of equilibrium is

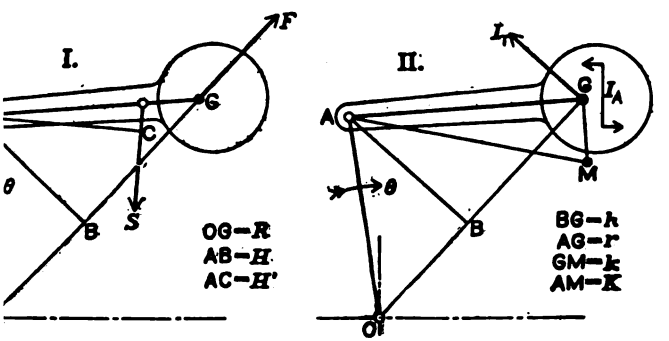

FIG. 526.—Force-action in the Shaft-governor.

$S \times AC$. While the speed of the shaft is changing on of changing load, the unbalanced part of the centrifugal supplemented by the inertia-action represented at II. l receiving the angular acceleration ω, the center of mass s the linear acceleration $OG \times \omega$, and the mass M develops a-force $I = MR\omega$, which acts with the lever-arm BG to bout A. At the same time the body AG has an angular n (considered as about its center G), which is resisted ment of inertia $Mk^2\omega$, k being, as usual, the principal us of gyration. In this figure the weight-arm is so t both inertia-effects act with the centrifugal force to movement of the governor.

Digitized by Google

(*e*) VARIOUS FORMS OF THE SHAFT-GOVERNOR.—For the large number of governors of this type that have been brought out, the best basis of classification is found in their arrangement with respect to the action of gravity and of inertia. The type showing the least departure from the fly-ball governor is represented by Fig. 527, where the weight-arms are pivoted on opposite sides of a diameter, and the main mechanism (which consists of the frame 1 and the moving pieces 2 to 6) is formed so as to give the arms 2 and 3 symmetrical movements. By this arrangement weights and inertia-forces are completely balanced and neutralized, except as regards the comparatively insignificant actions on pieces 6 and 8; so that we have here a purely centrifugal governor. In four or five designs of this type, now mostly obsolete, the essential variety is found in the part of the mechanism that is directly concerned with moving the eccentric-pendulum; and this remark applies equally to the class that follows.

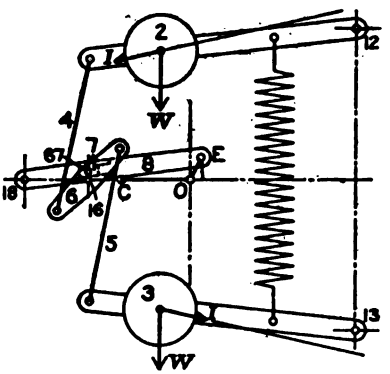

FIG. 527.—Diametral Symmetry.

The larger class among the older designs is represented by Figs. 528 and 529. The essential feature is that the weight-arms are pivoted on a diameter and are connected in such a manner that their movements are nearly, if not quite, symmetrical with respect to the shaft-center. They are therefore balanced as to gravity, but the inertia-effects do not neutralize each other. The linear inertia-forces are drawn on both figures for the inner and the outer positions of the weights. In the Buckeye governor these force-lines pass so close to the pivots that the effective turning-moments are small, and these moments change from positive to negative as the weights swing out; in the Westinghouse design the positive effects are greater; but in both cases, as generally in related designs, the torque due to the angular inertia is negative.

Digitized by Google

These are to be classed, then, as predominantly centrifugal governors, with a secondary inertia-action that more often hinders than helps the adjustment.

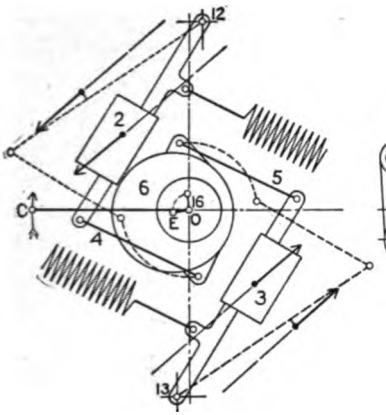

FIG. 528.—Buckeye Governor.

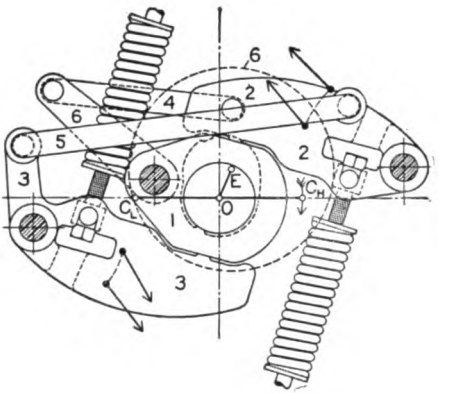

FIG. 529.—Westinghouse Governor.

Essentially of the same type is the single-weight Sweet governor already shown in Figs. 2 and 349, and skeletonized in Fig. 539. By putting sufficient weight on the eccentric-pendulum (see Fig. 2 especially), this governor can be given almost a perfect gravity-balance. Its action is fully discussed in § 63 (*c*) to (*f*).

We come now to the so-called inertia governors, which have to a considerable degree superseded the centrifugal type. These regulate through centrifugal force, but depend very much upon inertia for accurate adjustment and for steadiness. Contrasting designs are shown in Figs. 530 and 531. In the first, centrifugal action is as large, relatively speaking, as in purely centrifugal governors; but to it is added a powerful inertia-effect, which is almost wholly of the linear type. In the single-piece Rites governor the centrifugal force-action is comparatively small, and linear inertia has little effect because the center of mass G is so near to the pivot P; but the moment of angular inertia is very large and exerts a powerful influence. The Rites governor is now used, under license of course, by probably a majority of the builders of high-speed engines, examples being given in Figs. 202, 205, and

Digitized by Google

207. A governor closely analogous in the predominant use of angular inertia is to be seen on Fig. 201, and another of similar general form is used on Figs. 206 and 215. Except on double-valve engines like Figs. 203, 216, and 217, the purely centrifugal shaft-governor has almost gone out of use. It will be noted that

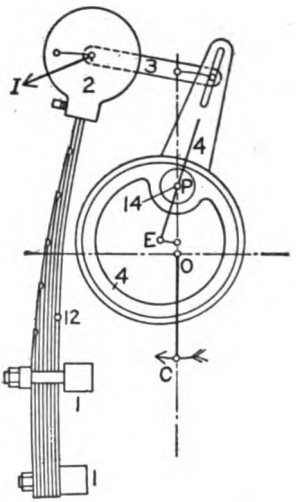

FIG. 530.—Robb-Armstrong Governor.

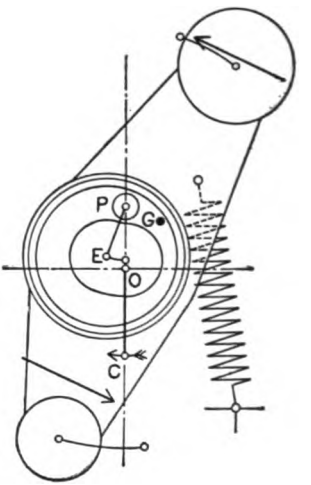

FIG. 531.—Rites Governor.

neither of the governors just shown is balanced as to weight—the gravity forces being relatively so small in effect that this is not found to be necessary.

§ 62. Special Principles and Methods.

As a preliminary to the analysis and discussion of the action of several representative governors, it will be necessary to set forth certain general principles of kinematics and of dynamics which find particular application in this line of work, and to develop from them methods of procedure, largely graphical, which will greatly facilitate the determinations to be made.

(*a*) REDUCTION OF FORCE FROM ONE PIECE TO ANOTHER.—In order to be able to transfer the force-action on one piece of a mechanism to another piece, so as most easily to get a combined

Digitized by Google

or resultant effect, we shall make free use of the principle that *a force doing work at a certain rate upon one piece or at one point in a mechanism may be replaced by another force doing work at the same rate upon another piece or at another moving point;* the measure of work-rate being the product of the intensity of the force by its virtual velocity. By virtual velocity is meant the component of the total velocity (of the point of force-application) taken along the force-line, any other component being at right-angles to this line of action. Thus to reason by velocity-relations is simpler and more convenient, for present purposes, than to use the methods of graphic statics, and leads to identical results. It is therefore highly important to have an easy way of finding the relative velocity of any two moving pieces; and an extension of the idea of the instantaneous center meets this need in a most satisfactory manner.

(*b*) Relative Instantaneous Centers.—In the discussion of the main engine-mechanism (refer to Fig. 112), we saw that the connecting-rod could be considered as turning for the instant about a point P which was located by the intersection of lines perpendicular to the paths of two points on the rod. In the fly-ball governor mechanism, Fig. 532, the analogous piece 3 has its rotation-center P found in the same way. Now this center is to be regarded, not so much as a point definitely located in space, as a point attached to the fixed piece 1; so that it is the common position of two points, attached to 1 and 3 respectively, which have the same velocity (here zero). Slightly broadening this conception—most naturally, perhaps, by considering that any "link" of a mechanism can be held fast as the fixed piece or "frame" without altering the relative movements of the links—we come to the following general definition:

The instantaneous center between any two pieces of a mechanism is the position of common points (one attached to each piece, or definitely located on a plane fast to each piece) which have the same velocity, or which are moving together for the instant.

Theorem of Three Centers.—The usual kinematic notation consists in numbering the several pieces or links and denoting the relative centers by the combined numbers. In Fig. 532, for

Digitized by Google

instance, we see that the joints B and C are to be designated as centers 23 and 34 (read "two-three", "three-four"). The problem now before us is, to find the common center between the non-adjacent moving links 2 and 4: for this we use the theorem of three centers, *That any three links of a mechanism must have their three relative instantaneous centers on a straight line.*

This fundamental idea is illustrated in Fig. 533, where we may consider links 1 and 3 as turning on link 2 at 12 and 23: then

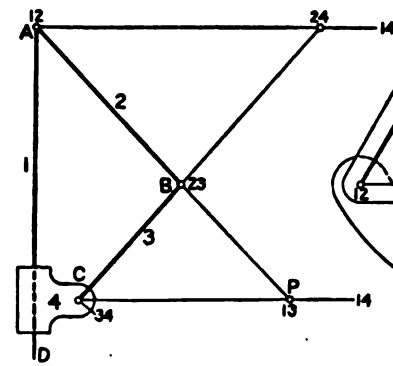

FIG. 532.—Instantaneous Centers in the Governor Mechanism.

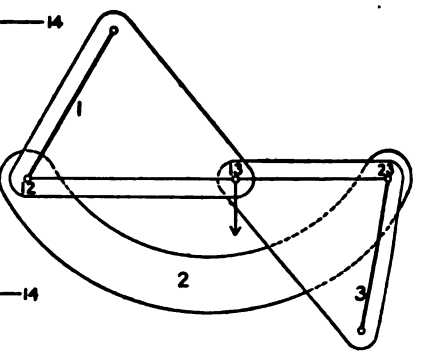

FIG. 533.—The Theorem of Three Centers.

any point on 1 will have its velocity perpendicular to the radius from 12, any point on 3 to the radius from 23; and points with the same velocity can be got only by putting the two radii on the same line, which must be the line 12-23. In general, the center 13 can be anywhere on this line, the two links which it connects having opposite directions of rotation when 13 lies between 12 and 23, the same direction when 13 is beyond either of these primary centers.

Turning again to Fig. 532, and considering the three links 2, 3, and 4, we have that 24 must lie on the line 23-34; considering 1, 2, and 4, that it must lie on 12-14; wherefore the intersection of these two lines determines the actual center. Since piece 4 slides on a straight line (an arc of infinite radius), its center 14 is at an infinite distance from the line AD, and any perpendicular from AD is a radius to 14. Note further that the center 13 is at the intersection of 12-23 and 34-14.

Digitized by Google

(c) Relative Velocity and Reduction of Force.—To see how the preceding principles are applied, consider first Fig. 534;

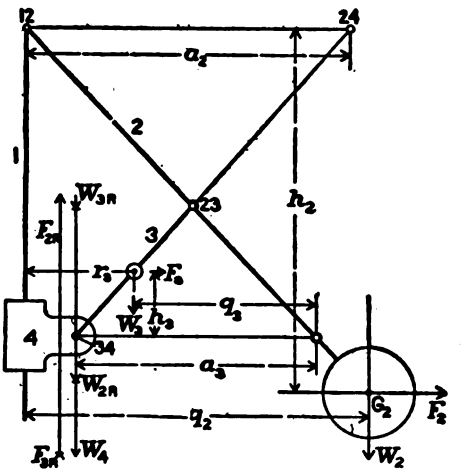

Fig. 534.—Reducing all the Forces to the Slide, in a Fly-ball Governor.

which in its general proportions is taken directly from the governor in Fig. 461. On piece 2 act the centrifugal force F_2 and the gravity force W_2; on piece 3 act F_3 and W_3. It is most convenient to reduce all the force-actions to the slide 4, partly because that piece has a very simple movement, chiefly because this movement is directly utilized for the control of the cut-off. With the possibility of turning about the center 12, link 2 is subjected to the two turning-moments

$$+F_2 h_2, \qquad -W_2 q_2.$$

Having a point of common velocity determined at 24, and with the further fact that in this case all points on 4 have the same movement we need only replace F_2 or W_2 at G_2 by an equivalent force at 24, perpendicular to the lever-arm a_2, to get the reduced effect on 4; which force can then be transferred to any desired combination-point, as 34. These reduced forces in Fig. 534 have the values

$$F_{2R} = F_2 \frac{h_2}{a_2}, \qquad W_{2R} = W_2 \frac{q_2}{a_2}; \quad \ldots \quad (331)$$

Digitized by Google

and are laid off at 34, in combination with the similar reduced forces from 3,

$$F_{3R}=F_3\frac{h_3}{a_3}, \qquad W_{3R}=W_3\frac{q_3}{a_3}.$$

The resultant of the forces from pieces 2 and 3 must balance the slide-weight W_4.

It appears therefore that the dimensions to be taken from the layout of a governor of this type for any link n are as follows:

r_n = radius from the rotation-axis, which is a factor in the centrifugal force;

h_n = lever-arm of the centrifugal force, measuring its tendency to turn the piece about the center 1n;

q_n = lever-arm of weight about center 1n;

a_n = radius to which the forces are to be reduced in preparation for their transfer to the slide.

In the rather more general case, represented by Fig. 535, where reduction is to be made to the point E on a link 4 that turns, the procedure for any other link 2 is as follows:

Find the common center 24 and measure the radii 12-24$=a_2$ and 14-24$=a_4$; then if θ_2 and θ_4 be simultaneous angular velocities of links 2 and 4 about their centers 12 and 14, the common linear velocity at 24 is $v_{24}=a_2\theta_2=a_4\theta_4$; whence

$$\frac{\theta_2}{\theta_4}=\frac{a_4}{a_2}=\frac{14\text{-}24}{12\text{-}24}. \qquad (332)$$

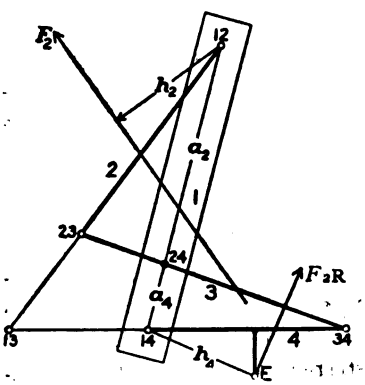

FIG. 535.—Force-reduction to a Link that turns.

Now the virtual velocity of F_2 is $v_2=\theta_2 h_2$, and that of F_{2R} is $v_E=\theta_4 h_4$; wherefore

$$F_2\theta_2 h_2=F_{2R}\theta_4 h_4,$$

or

$$F_{2R}=F_2\frac{\theta_2}{\theta_4}\frac{h_2}{h_4}. \qquad (333)$$

Another way of finding relative velocities, less general in its

Digitized by Google

applicability but sometimes of greater convenience, is used in connection with Fig. 539.

(*d*) CONCENTRATION AND REDUCTION OF MASS.—By the method just developed all the forces which act in the governor can be reduced to a chosen reference-point and there combined. To find the effect of their resultant in producing movement of the governor, we must know the other factor in dynamic action, or the mass that is to be accelerated—this mass being all reduced to the same point as the forces. The obvious method of procedure would be, to find the resistance which the actual mass of each piece offers to acceleration of the mechanism, and then to replace this actual mass by one of equivalent effect concentrated at the point of reduction. But the direct determination of acceleration, whether independent or relative, is usually a difficult and tedious process; and it is far easier to work from the general principle that the mass-relations in kinetic energy are the same as in acceleration or inertia. A rigorous and complete proof of this principle belongs to Mechanics; for present purposes it is enough to call attention to the fact that kinetic energy is the result of overcoming inertia, implying that the same mass is involved in both cases; and then to pass at once to the practical proposition that if we can find the kinetic energy of the actual machine-piece in any movement, its mass can be replaced by one which will have the same energy at the reduction-point. This brings the kinematic problem to a simple matter of relative velocities.

First, as to the primary kinetic energy of the body, we get at this by resolving the motion into a linear velocity of the center of mass and an angular velocity of turning about this center. If the body, as piece 2 in Fig. 536, is turning on the instantaneous center 12 at the rate θ, the linear velocity of the mass-center M_2, at the distance $12\text{-}M_2 = R$, will be $v = \theta R$; and the linear energy will be

$$E_L = 1/2\ Mv^2 = 1/2\ M\theta^2 R^2. \quad . \quad . \quad . \quad . \quad . \quad (334)$$

For angular movement on the center of mass—compare § 36 (*b*)—the kinetic energy is

$$E_A = 1/2\ M\theta^2 k^2, \quad . \quad . \quad . \quad . \quad . \quad . \quad (335)$$

Digitized by Google

where k is the radius of gyration, and θ must have the same value as in (334) when simultaneous component-motions are considered. Then for the total energy we have

$$E = 1/2\ M\theta^2(R^2+k^2). \quad . \quad . \quad . \quad . \quad . \quad (336)$$

Fig. 536 suggests that by simply drawing k perpendicular to R at M we get at M_C a point where the whole mass may be concentrated

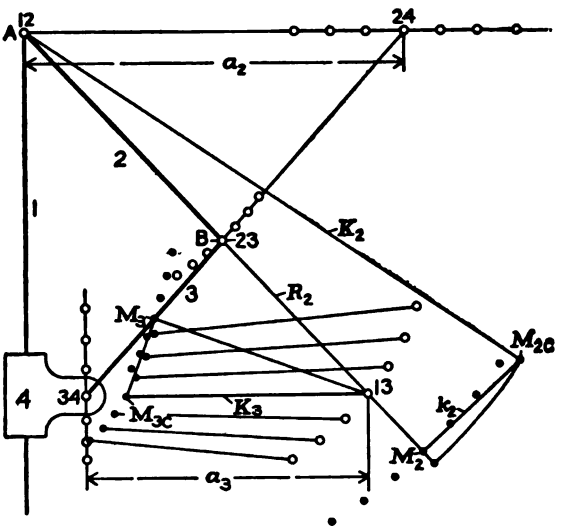

FIG. 536.—Mass-relations in the Fly-ball Governor.

for simple linear velocity due to turning about the instantaneous center, because $K^2 = R^2+k^2$.

Now for the simple governor of Figs. 534 and 536, where, in effect, the mass must merely be transferred to another point on its own piece, we have the relations

$$M_2K_2^2 = M_{2R}a_2^2; \qquad M_3K_3^2 = M_{3R}a_3^2;$$

or
$$M_{2R} = M_2\left(\frac{K_2}{a_2}\right)^2; \qquad M_{3R} = M_3\left(\frac{K_3}{a_3}\right)^2. \quad . \quad . \quad (337)$$

Digitized by Google

For the more general case illustrated in Fig. 535,

$$M_2 K_2^2 \theta_2^2 = M_{2R} h_4^2 \theta_4^2,$$

$$M_{2R} = M_2 \left(\frac{K_2}{h_4}\right)^2 \left(\frac{\theta_2}{\theta_4}\right)^2 \ldots\ldots (338)$$

§ 63. The Problem of Regulation.

(*a*) FORCE-ACTIONS IN A FLY-BALL GOVERNOR.—We shall now determine the behavior in steady running of the fly-ball governor shown at Fig. 461, which is reproduced in Fig. 537 and has already been diagrammed in Figs. 534 and 536. The weights of the several parts are:

W_2 = total weight of arm 2 = 56.87 lbs.;
W_3 = weight of link 3 = 0.97 lb.;
W_4 = total effective weight on slide 4 = 38.0 to 66.6 lbs., including all suspended parts, and varying with the location of the counterpoise on its arm (see Fig. 461). For one side of the governor, as in Fig. 537, we use half of this weight.

The movement of the weight-arm 2 is divided into four equal parts, from position 2 to 6, and the determination is carried one space beyond this range at each end. The measurements taken from the diagram of the governor, as defined on page 376, are given in Table 63 A, all in inches. Of the two mass-points marked by blacked circles on each piece, the inner is the true center of mass, the outer is the center for the effective centrifugal force. A discussion of the fact that the true effect of centrifugal force, in a fly-ball governor, cannot be got by taking this force as at the center of mass or of gravity, together with a suggestion of methods for finding the proper point of mass-concentration, will be found in the appendix to this chapter, page 435. Here the weight of piece 2 acts at the inner point, but the centrifugal force is to be calculated as if the whole mass were at the outer point, with an

Digitized by Google

increase of about 3 per cent. in its effect; for piece 3 the change is relatively greater.

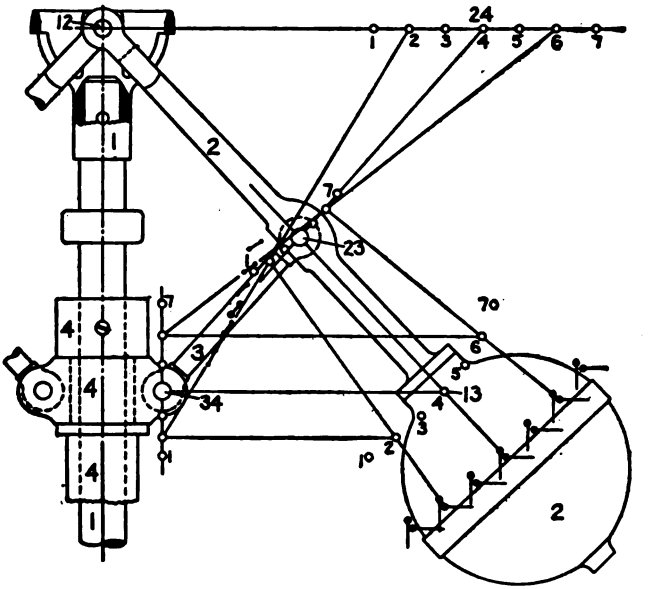

FIG. 537.—Analysis of the Governor in Fig. 461. Scale 1 to 6.

TABLE 63 A. MEASUREMENTS FROM FIG. 537.

Position.	For Arm 2.				For Link 3.			
	r_2	h_2	q_2	a_2	r_3	h_3	q_3	a_3
1	9.70	15,75	9.57	8.50	3.50	3.30	5.05	6.46
2	10.74	15.07	10.58	9.63	3.77	3.14	5.66	7.32
3	11.73	14.32	11.54	10.77	4.04	2.96	6.21	8.12
4	12.66	13.50	12.45	11.93	4.30	2.75	6.70	8.85
5	13.53	12.62	13.31	13.10	4.53	2.52	7.13	9.49
6	14.34	11.68	14.11	14.29	4.76	2.26	7.46	10.03
7	15.09	10.68	14.86	15.50	4.95	1.98	7.68	10.40
	1	2	3	4	5	6	7	8

For convenience in the final determination of the balancing speed, we at first calculate the centrifugal forces for a speed of

Digitized by Google

100 R.P.M. of the governor, and reduce them to slide 4. The general formula, for radius r in inches—see § 35 (*b*)—is

$$F=\frac{W}{g}\theta^2\frac{r}{12}; \qquad \theta=2\pi\frac{N}{60}=0.10472\,N; \quad . \quad . \quad . \quad (339)$$

the angular velocity θ being expressed in radians per second.

Making $N=100$ and reducing, we get the general relation

$$F=0.28416\,Wr; \quad . \quad . \quad . \quad . \quad . \quad . \quad (340)$$

and with the weights given above we have

$$F_2=16.16\,r_2, \qquad F_3=0.276\,r_3. \quad . \quad . \quad . \quad . \quad (341)$$

From these formulas, with (331), we calculate the values in Table 63 B, all expressed in pounds or in pound-inches It may be remarked that the slide-rule is very effective and convenient for this sort of work, and that nearly all of the calculations given in this chapter are of the degree of accuracy secured by that method.

TABLE 63 B. REDUCTION OF CENTRIFUGAL FORCE.

Position.	Arm 2.			Link 3.			Total.
	F_2	F_2h_2	F_{2R}	F_3	F_3h_3	F_{3R}	F_R
1	156.8	2468	290.7	0.97	3.18	0.49	291.2
2	173.7	2620	272.0	1.04	3.26	0.45	272.5
3	189.7	2719	252.2	1.11	3.30	0.41	252.6
4	204.5	2760	231.6	1.19	3.26	0.37	232.0
5	218.8	2761	210.8	1.25	3.15	0.33	211.1
6	231.9	2706	189.5	1.31	2.96	0.30	189.8
7	244.0	2602	168.0	1.36	2.70	2.26	168.3
	1	2	3	4	5	6	7

Note how the moment F_2h_2 varies; involving the product r_2h_2, it is greatest when the arm is at 45°, and decreases in either direction from this position; F_3h_3 varies in the same general manner, but piece 3 is so light and so near the axis of rotation that its force-effect is insignificant.

Digitized by Google

A similar set of values for the weight-forces is given in Table 63 C, where each of the last three columns is the summation of columns 2 and 4 with the value of W_4 at its own head, and Cases A, B, and C represent the weight-action for the adjustable poise W (see Fig. 461) at its inner, middle, and outer positions respectively.

TABLE 63 C. REDUCTION OF WEIGHTS TO SLIDE 4.

Position.	Arm 2. $W_2 = 56.87$		Link 3. $W_3 = 0.97$		Total Weight W_R on Slide 4.		
	$W_2 q_2$	W_{2R}	$W_3 q_3$	W_{3R}	Case A. $W_4 = 19.0$	Case B. $W_4 = 26.15$	Case C. $W_4 = 33.3$
1	544.0	64.05	4.90	0.76	83.81	90.96	98.11
2	601.5	62.50	5.49	0.75	82.25	89.40	96.55
3	656.5	61.00	6.02	0.74	80.74	87.89	95.04
4	708.2	59.32	6.92	0.73	79.05	86.20	93.35
5	757.5	57.80	7.24	0.73	77.53	84.68	91.83
6	803.0	56.20	7.22	0.72	75.92	83.07	90.22
7	845.0	54.55	7.16	0.72	74.27	81.42	88.57
	1	2	3	4	5	6	7

(*b*) REGULATION BY THE GOVERNOR IN FIG. 537.—Now the speed of rotation N of the governor must have such a value, for each position and in each case, that F_R, given for 100 R.P.M. in column 7 of Table 63 B, will be made equal to W_R as given in column 5, 6, or 7 of Table 63 C. Thus for position 4, Case B, F_R must have the value 86.20 instead of 232.0, or must be 0.3715 as great as for 100 R.P.M. Since F varies as N^2, we take the square root of this ratio and get the actual speed to be 60.9 R.P.M. What the corresponding engine-speed will be depends upon the relative sizes of the pulleys in the belt drive; which are here 15″ and 20″, so that the engine turns four-thirds as fast as the governor.

The regulating-action of an engine-governor is to be judged chiefly by the variation in its steady-running speed, as here set forth in columns 1, 4, and 7 of Table 63 D. The same thing is expressed in slightly different terms in columns 2, 5, and 8, where each speed is compared with that at position 4 as unity. This governor is by no means a close regulator, the total variation from position 2 (resting on stop-ring) to position 6 (highest permitted

Digitized by Google

TABLE 63 D. REGULATION BY GOVERNOR IN FIGS. 461, 537.

Position.	Case A.			Case B.			Case C.		
	N	N/N_4	F_{R1}	N	N/N_4	F_{R1}	N	N/N_4	F_{R1}
1	53.6	0.919	99.4	55.8	0.917	108.0	58.0	0.916	118.0
2	54.8	0.941	93.1	57.3	0.939	101.1	59.3	0.937	109.5
3	56.5	0.969	86.2	58.9	0.968	93.7	61.3	0.967	101.5
4	58.3	1.000	79.1	60.9	1.000	86.2	63.4	1.000	93.4
5	60.6	1.039	72.1	63.3	1.040	78.3	65.9	1.040	84.8
6	63.2	1.083	64.8	66.1	1.085	70.5	68.8	1.087	76.3
7	66.4	1.138	57.5	69.5	1.141	62.4	72.5	1.145	67.6
	1	2	3	4	5	6	7	8	9

position) being 14.2, 14.6, and 15.0 per cent. of the mean speed at 4 in the three cases. Note that moving the poise merely changes the absolute speed, with only a minute influence upon its manner of variation. The last column in each group (3, 6, 9) shows the value that F_R would have if the speed were kept constant at the

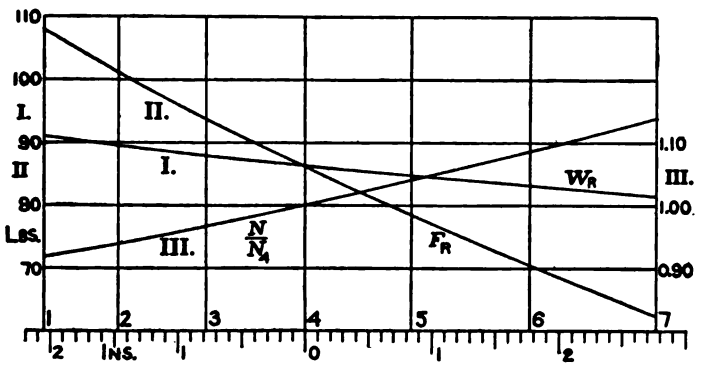

FIG. 538.—Curves of Regulation for Case B, Tables 63 C, 63 D.

value corresponding to position 4, each of these columns being got by multiplying all the values in column 7 of Table 63 B by a certain ratio—which is 0.3715 for Case B, as shown above. By comparison of these forces with the resultant weight-effects in Table 63 C, we get a primary measure of the stability of the

Digitized by Google

governor. This can be shown in clearest form by curves such as are drawn in Fig. 538.

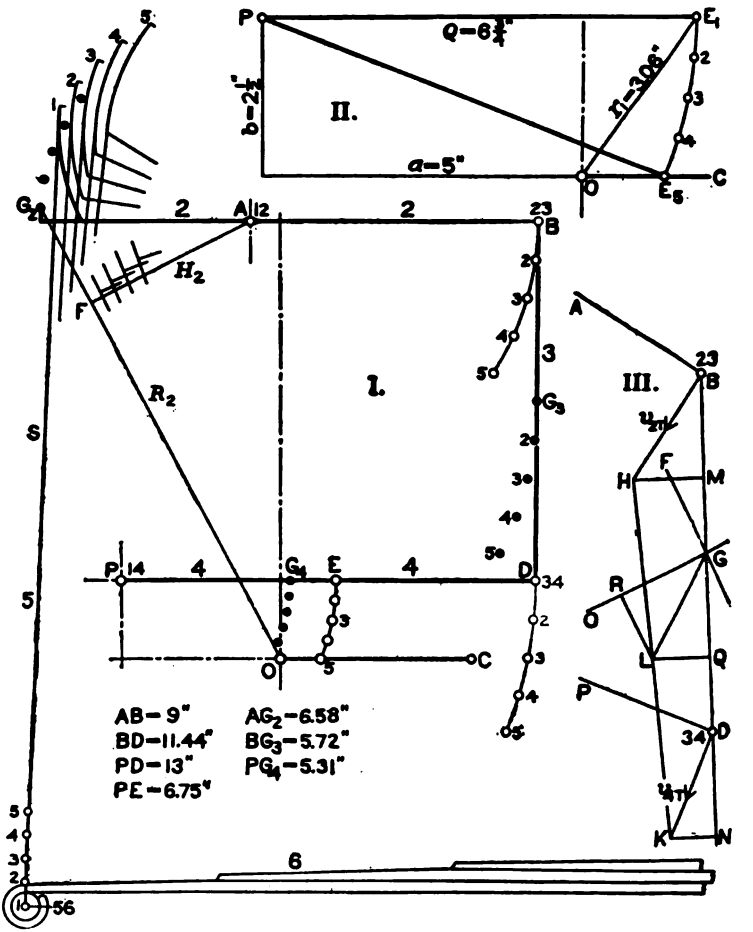

FIG. 539.—Diagram of Armstrong-Sweet Governor, for a 12″ by 12″ Ames Engine.*

In that figure, the base is the path of a point on the slide 4, as 34, Fig. 537, and the numbered ordinates are the positions of the

* For the primary data in this example the writer is indebted to Professor Klein.

Digitized by Google

ernor-gear for which determinations have been made. The curves for Case B, and are plotted, I. from col. 6, Table 63 C; II. m col. 6, 63 D; and III. from col. 5, 63 D. Curve III. shows the riation in speed that will make II. agree with I. The divergence tween I. and II. shows the force which, for a given speed, acts hold the governor in a certain position. The less this divergence, e more sensitive and unstable the governor is. We shall presently nsider the simple problem of making the balancing-speed more arly constant: but how near the governor may be brought to ochronous running, with due regard to stability, is a question at can be answered only after a study of its action in adjustment—nd then, perhaps, not very closely.

(*c*) Analysis of a Centrifugal Shaft-governor. — The overnor drawn in skeleton-outline at Fig. 539 is like that on the ngine in Fig. 2, all the dimensions and data being taken from an ctual design. Piece 2 is the weight-arm, with its center of gravity G_2 a little off the center-line because the head is made hollow and partly filled with shot, which lie as far out as possible when the ngine is running. Piece 4 is the eccentric-pendulum, with enough mass, central at G_4, to produce the gravity-balance described in § 61 (*e*). The strap 5 is fastened at the upper end to the arc on 2, at the lower end is gripped in a clamp jointed to the spring-end. The forces acting on 2, 3, and 4 are to be accurately determined and reduced to the point E on 4. As to the spring and strap, it will be assumed that they are closely enough represented by a mass concentrated at the joint 56, and equal to the strap-clamp plus a reduced mass for the spring. The latter is determined by integrating an expression which takes account of the fact that the cross-section varies almost uniformly from the inner toward the outer end, and that the deflection of any point on the spring varies as the cube of the distance from the fixed end—this furnishing a ratio of the virtual velocities. Then the primary data as to the links of the mechanism are as follows:

Piece	2	3	4	56	lbs.
Weight	32.9	5.0	24.5	4.5	lbs.
Gyr. k	5.75	4.86	4.08	0.0	ins.

Digitized by Google

Certain important dimensions that are to be used in the calculations are given on the figure, and those essential to the valve-action are shown at II.

(*d*) KINEMATIC RELATIONS.—The centers 13 and 24 being inconveniently distant (especially 13), we do not follow the method of Eq. (332), but instead use a construction which can be made within a smaller space. This is outlined at III., for position 5, and is carried through as follows:

The velocities of points B and D, due to turning about A and P, will be perpendicular to the radii AB and PD. If they are resolved into rectangular components, along and across the connecting-link BD, the components BM and DN must be equal: so that, having BH, we could transfer BM to DN and from it get DK. Then if θ_2 and θ_4 are the angular velocities about A and P, we have

$$BH=\theta_2\times AB, \qquad DK=\theta_4\times PD;$$

whence

$$\frac{\theta_2}{\theta_4}=\frac{BH}{DK}\frac{PD}{AB}.$$

To get the angular velocity of link 3, we note that the difference between the cross-components MH and NK is due to θ_3 (no center specified); so that $(MH-NK)=\theta_3\times BD$. The construction in its most compact and serviceable form is shown at Fig. 540 I., where bd, of any convenient length, represents the velocity along link 3, dh is perpendicular to it, and bh and bk are the total velocities of the points B and D, made perpendicular to AB and PD. Then the operations actually carried out are

$$\frac{\theta_2}{\theta_4}=\frac{bh}{bk}\frac{PD}{AB}, \qquad \frac{\theta_3}{\theta_4}=\frac{hk}{bk}\frac{PD}{BD}. \quad . \quad . \quad . \quad . \quad (342)$$

A little consideration will show that the figure bhk is a miniature of that which would be got by drawing radii from the center 13 to the points B and D.

For the forces which act through G_3, the relative virtual velocities are to be found directly. In Fig. 539 III., the line OG is a radius

Digitized by Google

from 0, or is the line of centrifugal force; and GF, perpendicular to it, is the direction of linear inertia. Resolving the total velocity GL of the center G into components GR and RL, we get the virta l velocities V_F and V_I; and these are to be compared with the

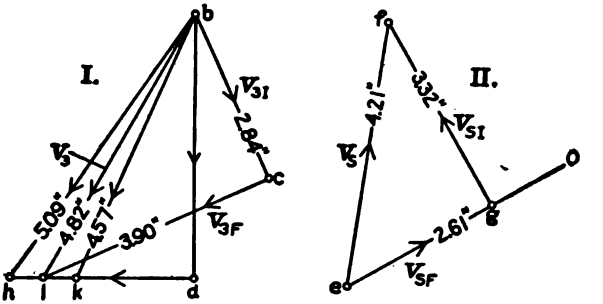

FIG. 540.—Special Constructions for Velocity.

velocity of E, which is to that of D in the ratio of PE to PD. In Fig. 540 I., l is midway between h and k (note that QL is half way between HM and KN), and lc and cb have the directions OG, GF. For the reduction of mass we shall need also the total velocity V_3 or bl; then the calculations to be made are

$$V_3 = V_E \frac{bl}{bk}\frac{PD}{PE}; \qquad V_{3F} = V_3 \frac{cl}{bl}; \qquad V_{3I} = V_3 \frac{bc}{bl}. \quad . \quad (343)$$

For the spring-force, acting along the strap 5, and for the forces due to the mass at 56, a similar determination of relative velocities must be made. In Fig. 540 II. the total velocity V_S along the strap is resolved into components in the directions of centrifugal force and of inertia of the mass at 56, again for position 5. Measuring the perpendicular distance (12-S) or AS (from A to the strap), we can satisfy the relations

$$V_S = V_E \frac{AS}{PE}\frac{\theta_2}{\theta_4}; \qquad V_{SF} = V_S \frac{eg}{ef}; \qquad V_{SI} = V_S \frac{gf}{ef}. \quad . \quad (344)$$

From these various equations we get the numerical results given in Table 63 E, all the linear velocities being in terms of V_E as unity.

Digitized by Google

TABLE 63 E. VELOCITY-RELATIONS IN THE AMES GOVERNOR.

Position	1	2	3	4	5	
θ_2/θ_4	1.444	1.452	1.475	1.523	1.606	1
θ_3/θ_4	−0.000	−0.050	−0.103	−0.167	−0.261	2
V_3	1.924	1.929	1.942	1.974	2.030	3
V_{3P}	1.384	1.428	1.485	1.556	1.642	4
V_{3t}	1.343	1.294	1.254	1.216	1.196	5
12 S	6.13″	5.78″	5.44″	5.11″	4.78′	6
V_8	1.311	1.243	1.190	1.153	1.138	7
V_{8P}	0.967	0.887	0.816	0.754	0.705	8
V_{8t}	0.897	0.875	0.871	0.873	0.898	9

(*e*) REACTION OF THE VALVE-GEAR.—Before proceeding to calculate and balance the centrifugal and spring forces, we must determine the effect of the reaction of the valve-gear upon the eccentric. In a Corliss engine only a very small force is exerted by the valve-gear upon the governor—merely the pressure of the trip-arm upon the cam while in the act of unhooking, due to friction of the latch-edges under the pull of the dash-pot. But with a shaft-governor the whole force required to move the valve-gear reacts upon the eccentric: this reaction varies widely in effective magnitude throughout the revolution, and has an average resultant which helps to determine the balancing-speed.

The problem before us is essentially the same as that of the crank-pin pressures, discussed in § 38 (*a*) to (*d*); but in this case the simpler methods give amply accurate results. It is better to separate inertia and valve-resistance, partly because results can be reached more easily, chiefly because one is a direct function of the speed and the other is not. In this engine the total mass of the valve-gear, reduced to the outer end of the rocker-arm (to the wrist-pin), and including the whole of the eccentric-rod, is equal to a weight of 38.7 lbs. In general, we should concentrate at the eccentric-center the mass of the eccentric-strap plus a part of the rod, whereupon this mass will have simple centrifugal force; the rest of the rod is to be added to the sliding parts. With the small eccentric-pin (see Fig. 2), we here put half the rod, or 8.5 lbs.,

Digitized by Google

at the eccentric, the remaining 30.2 lbs. at the wrist-pin on the rocker.

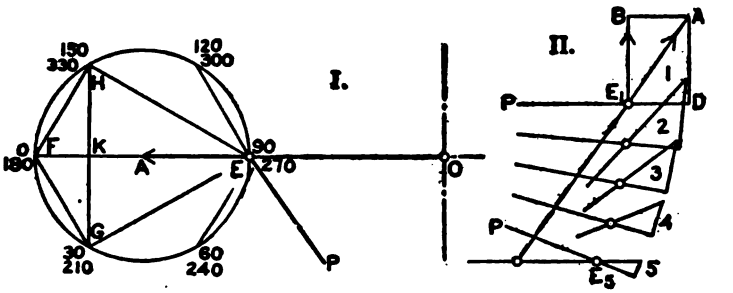

FIG. 541.—Inertia of the Valve-gear.

Valve-gear Inertia.—The force-action upon the eccentric, due to the reciprocating mass of the valve-gear, is illustrated in Fig. 541. It is a simple matter to calculate the ideal centrifugal force F_0—see § 35 (*a*)—and then use the formula for harmonic motion, $F = F_0 \cos \alpha$. This force F, always acting along the stroke-line, is laid off from the center E in Fig. 541 I., after the manner of Fig. 159. In effect, we imagine the eccentric-radius OE to stand still and the stroke-line to rotate backward around E. The polar diagram of the inertia F is a circle like the Zeuner valve-circle, over which the rotating radius sweeps twice during one revolution, as indicated by the angle-numbers.

Consider now any pair of forces as EG and EH, symmetrically placed with reference to the dead-center line EF: the opposing components KG and KH neutralize each other as to any tendency to produce resultant movement of the eccentric-center, but the two components EK tend to move E radially outward. To find the average effect—the angle-base being equivalent to a time-base —we must average up $EK = F \cos \alpha = F_0 \cos^2 \alpha$ for half a revolution, or integrate

$$\int_{-\frac{\pi}{2}}^{+\frac{\pi}{2}} F_0 \cos^2 \alpha \, d\alpha = F_0 \left[\tfrac{1}{4} \sin 2\alpha + \tfrac{1}{2}\alpha \right]_{-\frac{\pi}{2}}^{+\frac{\pi}{2}} = \tfrac{1}{2}\pi F_0. \qquad (345)$$

This being a product of force by angle or time, we take out the

Digitized by Google

time-factor π and get $\frac{1}{2}F_0$ as the mean radial force. This force is laid off at EA in I.; and in II. the EA for each governor-position is resolved into rectangular components, ED along PE, EB tending to move E outward along its path, acting with the spring and against the positive centrifugal force of the weight-arm.

In calculating the values given in Table 63 G, line 5, we can take half of the centrifugal force due to the slide-mass of 30.2 lbs. and add it to the whole of that due to the 8.5 lbs. at the eccentric-pin; or, to reduce the number of operations, can make the determination of Fig. 541 for one-half of $(30.2+2\times8.5)$ or for 23.6 lbs.

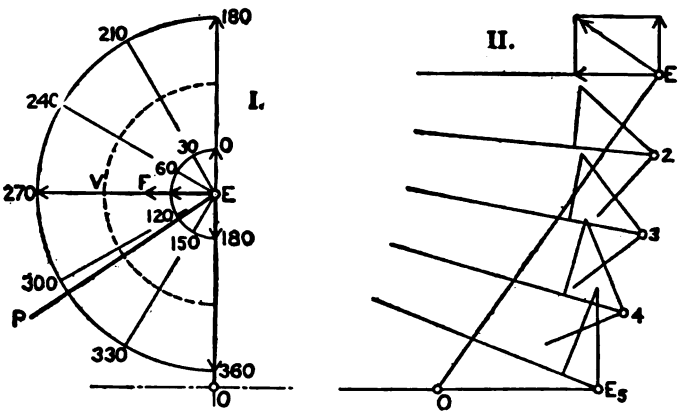

FIG. 542.—Effect of Valve-resistance.

Valve-resistance. — The resistance of the valve is one of the most uncertain and indeterminable forces in the engine. It seems reasonable to assume that this will be an approximately constant force, acting against the movement in each stroke. Some experiments that have been made indicate a value of about 50 lbs., reduced to the outer end of the rocker, for the engine under consideration. This value is used in Fig. 542 I., modified by the pressure of the steam on the end of the valve-rod, which changes it to 20 lbs. on the forward stroke, 80 lbs. on the return stroke of the valve. Laying off this valve-force from E, as in Fig. 541, we get the action represented by the two full-line semicircles, with the dotted curve for the average of both strokes. Here the

Digitized by Google

force-action is symmetrical with respect to a line at right angles to the eccentric-arm; resolution and integration give the mean force $EF = 2/\pi \times EV$, or $EF = 0.6366 \times 50 = 31.83$ lbs. In II. this force is laid off from E, perpendicular to each eccentric-radius; and the components perpendicular to PE are added to the spring-force in Table 63 I.

It will be noted that we have here, especially in Fig. 542, disturbing force-actions of the first magnitude. According to the diagram at I. there is one position, between 180° and 210° of the eccentric-travel, where the full force of 80 lbs., plus the inertia shown in Fig. 541 I., is tangential to the path of E. It is by making the time of action short that the momentum given to the governor-mass is kept within practically negligible limits—which is a strong reason why the shaft-governor is not well adapted to slow-moving engines. Only in a closer study of the subject than is here permissible would an application be made of the methods used for the fly-wheel discussion in § 36 (*d*), with a view to finding how great is the small periodic oscillation due to this variable force. It is evident that the valve-gear reaction completely overshadows any force-variation due to the periodic fluctuation in the speed of the shaft, even when we consider the heavy inertia-governor in Fig. 531.

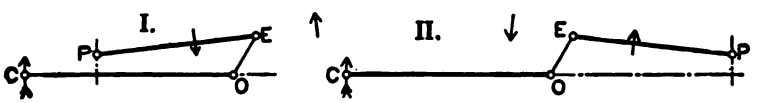

FIG. 543.—Effect of Eccentric-friction.

Eccentric-friction.—Friction in the various joints of the governor-gear tends simply to hinder its movement, with an influence upon its action in adjustment: friction in the joints of the valve-gear enters as a minor component into the resistance just considered: but friction of the strap upon the eccentric—which may rise to a considerable magnitude under certain conditions—takes the form of a nearly constant torque, tending to turn the eccentric backward, or to rotate the eccentric-pendulum upon the pivot P. In the engine under consideration, with only a small pin, this action is negligible. In general, the effect of excessive friction on the

Digitized by Google

eccentric will be to make a certain nearly uniform change in the running-speed, without affecting the variation of the speed in regulation. Whether this change will be an increase or decrease depends upon the arrangement of the eccentric-pendulum with reference to the crank, as illustrated in Fig. 543. In the first case, the friction-torque tends to throw E out, helping the spring, and requiring an increment of speed to balance it; in the second case, opposite conditions prevail. It is of interest to note that if the eccentric-strap gets hot and sticks fast, an engine arranged as in Fig. 543 II. will simply be shut down, while one with the other arrangement is likely to "run away" and be seriously damaged.

TABLE 63 F. MEASUREMENTS FOR CENTRIFUGAL FORCE, FROM FIG. 539.

Position.	1	2	3	4	5	
Piece 2 R_2	16.23	16.97	17.66	18.30	18.90	1
Piece 2 H_2	5.63	5.23	4.78	4.28	3.73	2
Piece 3 R_3	11.48	10.59	9.66	8.69	7.65	3
Piece 4 R_4	2.52	2.02	1.52	1.02	0.54	4
Piece 4 H_4	5.26	5.30	5.31	5.23	4.73	5
Piece 56 R_{56}	11.28	10.74	10.23	9.75	9.30	6
Valve-gear r	3.06	2.54	2.04	1.59	1.26	7

(*f*) BALANCING FORCES IN FIG. 539.—Here again, as under 537, we at first calculate the centrifugal forces for 100 R.P.M. Substituting in Eq. (340) the weights given in Arts. (*c*) and (*e*), we have in the formula $F=CR$ the following values for the coefficient C:

Piece	2	3	4	56	V.G.
Weight	32.9	5.0	24.5	4.5	23.6
C	9.35	1.42	6.96	1.28	6.71

Radii from the center O to each center of gravity are given in Table 63 F, measured in inches and ready for substitution in (340). From these are calculated the centrifugal forces in Table 63 G, which are given, not because they are to be used directly, but rather for the sake of getting some idea of their relative magnitude.

Digitized by Google

TABLE 63 G. CENTRIFUGAL FORCES IN FIG. 539, AT 100 R.P.M.

Piece.	1	2	3	4	5	
2	151.8	158.6	165.0	171.0	176.6	1
3	16.3	15.0	13.7	12.3	10.9	2
4	17.7	14.0	10.6	7.1	3.8	3
56	14.4	13.8	13.1	12.5	11.9	4
V.G.	20.5	17.0	13.7	10.7	8.4	5

For pieces 2 and 4 we use the method of Eq. (333), § 62 (*c*). The lever-arm H, equal to AB on Fig. 526 or AF on Fig. 539, is given in Table 63 F; for h_4 we use PE or Q, equal to 6.75″. The angular velocity-ratios are given in Table 63 E, as are also the ratios of virtual velocities by which we must multiply the actual centrifugal forces of 3 and 56 in order to get their reduced forces at E, according to the relations

$$F_{3R} = V_{3F} F_3, \qquad F_{5R} = V_{5F} F_{56}. \quad . \quad . \quad . \quad . \quad (346)$$

The results of these calculations are given in Table 63 H, where the effective component of the valve-gear inertia, line 5, is taken from Fig. 541.

TABLE 63 H. REDUCED CENTRIFUGAL FORCES.

Piece.	1	2	3	4	5	
2	+183.0	+178.4	+172.3	+165.3	+156.8	1
3	− 22.5	− 21.5	− 20.4	− 19.2	− 17.8	2
4	− 13.8	− 11.0	− 8.3	− 5.5	− 2.7	3
56	− 13.9	− 12.2	− 10.7	− 9.4	− 8.4	4
V.G.	− 17.1	− 13.7	− 10.2	− 67.	− 3.2	5
$\Sigma F_R = F_{100}$	+115.7	+120.0	+122.7	+124.5	+124.7	6

Table 63 I contains the final set of values in this computation. The increment of spring-deflection is Δf, in inches, and the scale of the spring is 92.0 lbs. to 1 in. of deflection. Then the increments of spring-force have the values ΔS, and with the initial tension 718 lbs. (experimental) we get the forces S as acting along the strap. Multiplying these by the virtual velocity-ratio V_S from

Digitized by Google

Table 63 E, we have the reduced spring-forces S_R. To these is added the effective component of the mean valve-resistance from Fig. 542, and the result is the total balancing force B. Dividing this B by F_{100}, and multiplying 100 by the square-root of the ratio, we get the balancing-speed N. For this last calculation the slide-rule is not effective, and five-place logarithms must be used.

TABLE 63 I. BALANCING FORCES AND SPEEDS.

Position.	1	2	3	4	5	
M	0.00	0.83	0.78	0.74	0.70	1
MS	00.0	76.4	71.8	68.1	64.4	2
S	718.0	794.4	866.2	934.3	998.7	3
S_R	941.3	987.4	1030.6	1077.3	1136.5	4
V.G.	18.4	19.6	21.8	25.2	29.8	5
B	959.7	1007.0	1052.4	1102.5	1166.3	6
N	288.0	289.7	292.9	297.6	305.8	7

It will be noted that the regulation shows quite a variation in character, being close at first, coarser as the eccentric moves in. Referring to Fig. 552, where the curve of M.E.P. is given, we see that this manner of variation tends to make the regulation uniform if referred to the load on the engine rather than to the position of the eccentric. A further inspection of this curve shows that the regulation is closer than at first sight appears; for whereas the total variation of N in the table is about 6 per cent. over the whole range of the governor, it appears that the effective range of loading is, roughly, from position 2 to position 4.1, with a speed-change of only about 4 per cent.

(*g*) CONTROL OF THE REGULATION.—The methods developed and applied in the preceding discussion can be used in the solution of any problem as to regulation that may arise: and before passing to the question of adjustment and stability, we shall consider briefly how the regulation can be varied in character in the two types of governors.

In Fig. 544, the primary element of the fly-ball governor is shown at I. in its simplest form, or as what is known as the plain conical pendulum. Using the notation of Fig. 534, and equating

Digitized by Google

the opposite moments of centrifugal force and of weight, we have

$$WCN^2rh = Wq = Wr;$$

whence

$$N \propto \sqrt{\frac{q}{rh}} \propto \sqrt{\frac{1}{h}}. \quad . \quad . \quad . \quad . \quad . \quad . \quad (347)$$

The first value in (347) is general, the second is for this particular case. In effect, we divide the rectangle rh by the arm r and get the height h of the cone of revolution, upon which the speed depends. In the lower diagram, h is laid off upon a base representing linear travel of the center G, and from it is derived a second curve which shows how the speed varies, that at the middle or 45-degree position being taken as unity.

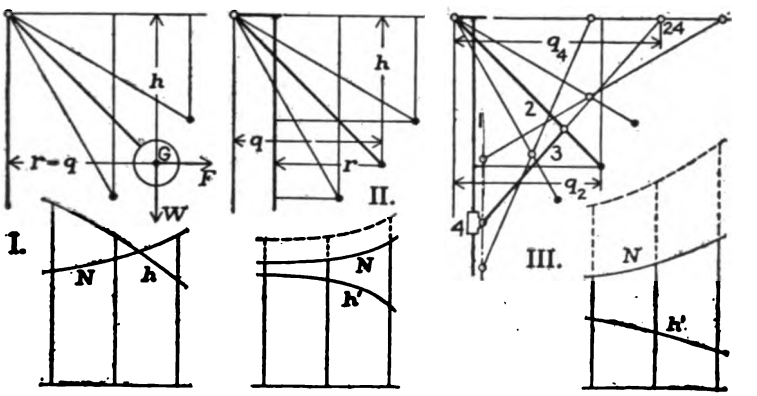

FIG. 544.—Regulation by the Fly-ball Governor.

One way of making the variation less is to offset the pivot beyond the axis of rotation, as at II. Dividing each rh by q, we get the ideal or effective height h', which is plotted below and gives the speed-variation there shown. The full-line curve for N compares speeds just as in I.; the dotted curve represents them to the same scale as in I., showing how the decrease in the effective length of r raises the speed at which the governor must turn for equilibrium. By using the lower part of the range of movement, quite a close regulation can be secured with this arrangement.

Digitized by Google

The effect of weight on the slide, as in Fig. 537, is shown at III. Here we reduce the weight on 4 to the arm 2, by transferring it to the instantaneous center 24. For the sake of simplicity we take W_4 the same as W_2, whereupon the equation of moments is

$$W_2CN^2rh = W_2q_2 + W_4q_4 = W_2(q_2 + q_4). \quad . \quad . \quad . \quad (348)$$

The moment-arm q_4 varies even more rapidly than q_2, so that, in spite of the effect of the offset of the top pivot, the speed varies as much as in Case I. Note how greatly the actual speed (dotted curve) is increased by the addition of W_4.

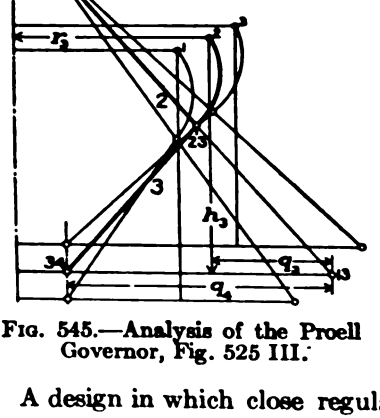

FIG. 545.—Analysis of the Proell Governor, Fig. 525 III.

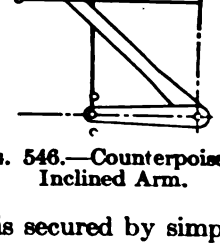

FIG. 546.—Counterpoise on Inclined Arm.

A design in which close regulation is secured by simple means, through a thorough understanding of the mechanics of the governor, is outlined in Fig. 545; and the important full-size measurements are given in Table 63 J. The only dimension not taken directly from the figure is q_{4R}: to get this, the measured q_4 is

TABLE 63 J. RESULTS FROM FIG. 545.

Position.	r_3	h_3	r_3h_3	q_3	q_{4R}	Σq	h'
1	6.48	10.72	69.5	4.47	11.52	15.99	4.34
2	7.73	10.11	78.1	4.70	13.42	18.12	4.31
3	8.74	9.41	82.2	4.88	14.94	19.82	4.14

Digitized by Google

multiplied by 1.285, which is the ratio of W_4 to W_3; then this reduced value can be added to q_3, for use as in Eq. (348), $r_3 h_3$ being divided by Σq to get h'. Note how, by the design of the mechanism, q_3 is kept nearly constant and $r_3 h_3$ is made to increase so as to compensate for the increase in q_4. Of course, the closer analysis which takes account of the mass of the links of the mechanism, as well as of the ball, would have to be used for getting accurate results.

An obvious scheme for varying at will the regulation of a governor like Fig. 461 is to put the poise on an inclined arm, as indicated in Fig. 546, and this arrangement is used on some governors.

With a spring for the balancing force, and the chance to vary scale, manner of elongation, and length of lever-arm, as suggested

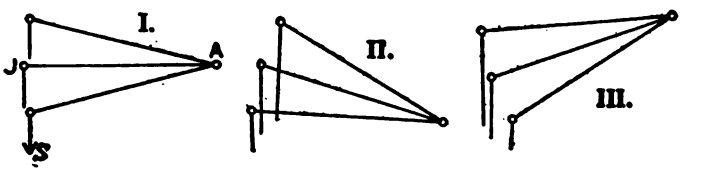

FIG. 547.—Types of Spring-connection.

by Fig. 547, we have an element of great flexibility, and the possibility of securing any regulation that may be desired.

Shaft-governors are usually provided with means of varying the speed and, incidentally, the regulation. The adjustments possible are, the addition or movement of weights, change in the spring tension, and movement of the point of spring-attachment. Changing the location of the center of gravity of the weight-arm may cause quite a change in the manner of variation of the product RH: if this is made to increase more rapidly, the regulation is made closer, and vice versa. Increasing the spring tension usually leaves its scale the same, so that the proportional increase due to deflection on account of movement of the governor is less, or again the regulation is closer. Moving the fulcrum-point of the spring in order to change the speed may or may not affect the regulation, and the effect could only be predicted after a study of the particular case.

Digitized by Google

With the fly-ball governor it is easy to provide for non-automatic adjustment of the speed while the engine is running. Such governors are now sometimes made with a little electric-motor on the wheel, which moves the spring-attachment, and can be controlled from the switchboard—this device being used where several engines drive alternating-current generators in parallel, and one coming into service must be synchronized with the others before being thrown into the circuit.

§ 64. The Problem of Adjustment.

(*a*) Reduced Masses in the Fly-ball Governor.—In order to apply Eq. (337) to the governor in Fig. 537, it was first necessary to find k_2 and k_3, which by closely approximate calculation came to 4.23″ and 2.62″ respectively: then K_2 could be measured off once for all on Fig. 536, but K_3 had to be laid off for each position. An outline of the computation for links 2 and 3 is given in Table 64 A, where all the masses are expressed in ordinary pounds. It will be noted that here again link 3 might have been left out of account without appreciable error.

Table 64 A. Reduction of Mass to Slide 4, Fig. 537.
$M_2 = 56.87$ lbs. $M_3 = 0.97$ lb. $K_2 = 18.71''$.

Position	Arm 2.			Link 3.				Total.
	a_2	$\left(\frac{K_2}{a_2}\right)^2$	M_{2R}	K_3	a_3	$\left(\frac{K_3}{a_3}\right)^2$	M_{3R}	M_R
1	8.50	4.850	276.0	6.40	6.46	0.98	0.95	277.0
2	9.63	3.780	214.0	6.81	7.32	0.87	0.84	214.8
3	10.77	3.025	172.3	7.24	8.12	0.80	0.77	173.1
4	11.93	2.465	140.3	7.59	8.85	0.74	0.71	141.0
5	13.10	2.038	116.0	7.91	9.49	0.70	0.67	116.7
6	14.29	1.717	97.7	8.16	10.03	0.67	0.65	98.4
7	15.50	1.459	82.9	8.30	10.40	0.64	0.62	83.5
	1	2	3	4	5	6	7	8

For the slide 4 and the valve-gear parts that move with it, including all the rods and the cam-rings but not the poise W, the

Digitized by Google

reduced mass is 54.0 lbs. The poise, in its three positions "in", "middle", and "out", reduces to 40.4, 102.3, and 192.2 lbs. respectively. This gives to M_4 the total values 94.4, 156.3, and 246.2 lbs. for cases A, B, and C, of which masses one-half is to be used in combination with those in column 8 in the last table. Then for case B, which we are to discuss further, the total reduced mass is given in Table 64 B.

TABLE 64 B. TOTAL REDUCED MASS, CASE B.

Position	1	2	3	4	5	6	7		
Mass	355.2	293.0	251.3	219.2	194.9	176.6	161.7	pounds	1
	11.05	9.12	7.86	6.82	6.06	5.49	5.03	mass units	2

1 mass unit = 32.16 lbs.

(b) M.E.P. AND FLY-WHEEL EFFECT.—By laying out the cut-off cam-gear and locating on Fig. 465 the cut-offs corresponding to the several governor-positions, and then sketching a set of indicator diagrams, the M.E.P. curve on Fig. 548 was obtained—the operation being analogous to that in Figs. 352 and 354, but more complicated in its initial steps. This curve is based on a boiler-pressure of 80 lbs. by gage.

Data as to the weight of the fly-wheel not being immediately available, a logical value was obtained as follows:

It is assumed that when the engine is running with an M.E.P. of the value $P=45$ lbs., at 80 R.P.M., with the phase-ratio $k=0.15$, the coefficient of speed fluctuation is $f=0.01$. Now if the work in one revolution, W_R, is done by the force P acting through two strokes, we may take it to be approximately true that the free work $E=0.15\,W_R$ will be done by an unbalanced pressure ΔP acting through one-half a stroke—this half-stroke corresponding to the quadrant which is the average length of a phase in the turning-force diagram. Then if $\Delta P \times 0.5 = 0.15 \times P \times 2$, we have $\Delta P = 0.6P$, here 27 lbs., as the unbalanced force which by acting through the time of one-fourth of a revolution will make a change of one per cent. in the speed of the shaft. In general, the change in momentum may be expressed as

$$\Delta P \times \Delta t = CM\Delta N, \quad . \quad . \quad . \quad . \quad . \quad . \quad . \quad (349)$$

Digitized by Google

where ΔN is the speed-change produced by the free force ΔP in the time Δt, all the constant factors being included in C. Putting the mass M of the wheel also into the constant, and substituting in $\Delta N = C \Delta P \Delta t$ the values

$$\Delta P = 27, \qquad \Delta t = \frac{1}{4}\frac{60}{N} = \frac{15}{N} = \frac{15}{80}, \qquad \Delta N = \frac{80}{100},$$

we get

$$\frac{80}{100} = C \times 27 \times \frac{15}{80}; \qquad C = 0.158.$$

Then for this engine we have the relation

$$\Delta N = 0.158\, \Delta P \Delta t. \quad . \quad . \quad . \quad . \quad . \quad . \quad . \quad (350)$$

(*c*) ADJUSTMENT BY THE FLY-BALL GOVERNOR.—The data for the calculation of this action are collected in Fig. 548, several examples are fully plotted in Figs. 549 to 551, and the method used is set forth in Table 64 C, which carries the numerical values for Fig. 549 through one revolution. Although here split into three sections, the table is really continuous, each calculation being contained in a line carried across all three parts; nevertheless, the division has a logical basis, because the first section is concerned with the action of the main engine-mechanism (of the shaft or wheel, more particularly), the second section shows the dynamic conditions in the governor (force and mass), and the third determines the movement of the governor.

TABLE 64 C. FORM FOR CALCULATION OF ADJUSTMENT ACTION.

Calc. No.	Time. Δt	M.E.P. P	M.E.P. ΔP	Speed. ΔN_E	Speed. N_E	Speed. N_G	Speed. N_B
0		30.5			81.20	60.90	60.9
1	.1843	30.5	+10.5	+.306	81.50	61.12	61.0
2	.1837	"	"	"	81.81	61.36	61.1
3	.1832	29.3	+ 9.3	+.270	82.08	61.56	61.3
4	.1827	"	"	"	82.35	61.76	61.7

Digitized by Google

TABLE 64 C.—*Continued.*

	Forces.					Mass.	
	W	F_{100}	F	f	f_m	M	M_m
0	86.2	232.0	86.2	0		6.82	
1	86.2	231.7	86.8	+0.6	+0.3	6.82	6.82
2	86.1	230.8	87.0	+0.9	+0.75	6.77	6.79
3	86.0	228.8	87.0	+1.0	+0.95	6.70	6.74
4	85.7	224.9	85.9	+0.2	+0.6	6.53	6.62

TABLE 64 C.—*Continued.*

	Velocity.			Displacement.			
	Δv	v	v_m	ΔS	S	Est.	S_N
0		0			0		0
1	+.0081	+.0081	+.0041	+.0088	.009	.01	.085
2	+.0203	+.0284	+.0182	+.0402	.049	.05	.170
3	+.0258	+.0542	+.0413	+.0906	.140	.13	.245
4	+.0166	+.0708	+.0625	+.1372	.277	.28	.313

Behavior of the Engine.—The methods to be used in the last determination just mentioned are very much like those in the detailed analysis of fly-wheel action, § 36 (*d*) to (*g*); and it will be well to review that discussion at this point. For the engine-shaft, however, we shall not follow the periodic fluctuation in speed, but as a simplifying approximation will assume that only the change in mean speed due to an alteration of load or power need be considered. The load is supposed to change abruptly from a value represented by the mean effective pressure P_1 to one represented by P_2, this event taking place just after cut-off has fixed the power which will be developed during the next half-revolution. Each calculation is made for a quarter-revolution, the same period that was used in getting (349) or (350); and the length of this period, $\Delta t = 15 \div N$, varies with the R.P.M. of the engine. As an additional simplification it is assumed that the position of the governor just at the end of each half-revolution will determine the power for the next half, according to the M.E.P. curve on Fig. 548; and

Digitized by Google

ADJUSTMENT DIAGRAMS FOR FLY-BALL GOVERNOR IN FIG. 537.

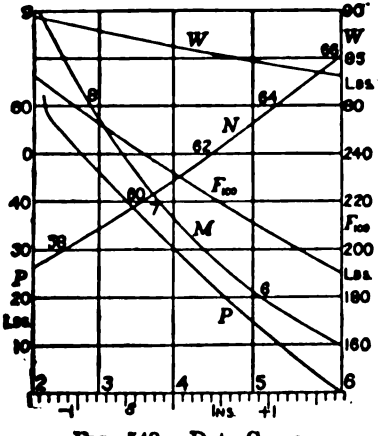

FIG. 548.—Data Curves.

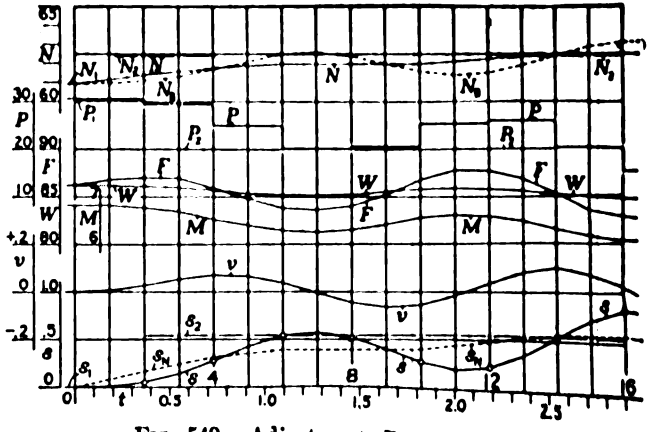

FIG. 549.—Adjustment, $P_1 = 30.5$ to $P_2 = 20$.

Base of Fig. 548 is path of reduction-point 34 on slide 4: forces and masses are all reduced to this point, as heretofore designated by the subscript R. Numerical data for the several curves will be found as follows:

W = weight force, Table 63 C, column 6.
F_{100} = centrifugal force at 100 R.P.M., Table 63 B, column 7.
N = balancing speed of governor, Table 63 D, column 4.
M = mass of governor and attached parts, Table 64 B, line 2.
P = mean effective pressure on piston—from approximate indicator diagrams not here shown.

Digitized by Google

ADJUSTMENT DIAGRAMS FOR FIG. 537, *Continued.*

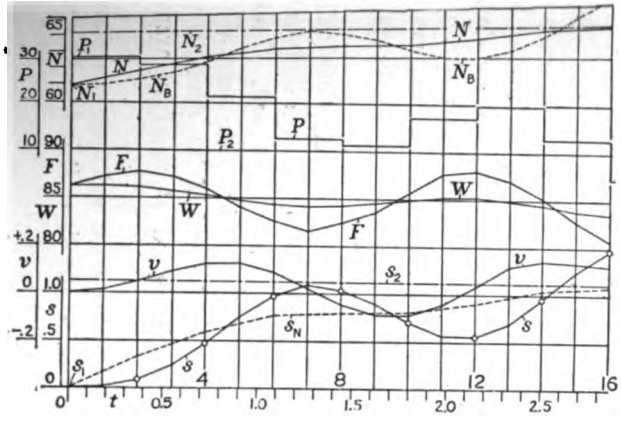

FIG. 550.—Adjustment, $P_1 = 30.5$ to $P_2 = 10$.

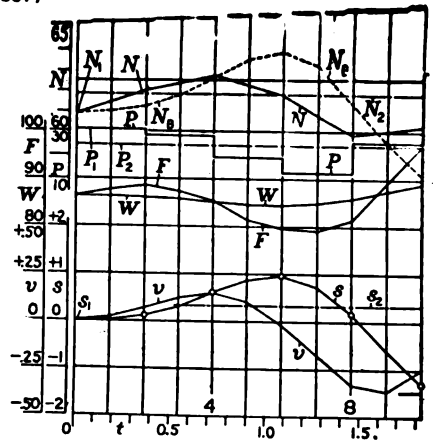

FIG. 551.—Fly-wheel Light.

QUANTITIES AND SYMBOLS FOR ADJUSTMENT CURVES.

Mean Effective Pressure.

P_1 = M.E.P. for initial load.
P_2 = M.E.P. for changed load.
P = actual, variant M.E.P.

Rotary Speed of Governor.

N_1 = initial steady speed.
N_2 = final steady speed.
N = actual speed.
N_B = balancing speed for the governor-position at any instant.

Forces and Mass.

W = weight force
F = centrifugal force } All reduced to point 34.
M = mass of governor

Motion of Reduction-point.

v = velocity, feet per second.
s_1 = initial position, zero at position 4.
s_2 = final position, for new load.
s = actual travel, in inches.
s_N = position for balancing, at the speed existing at any instant.

these critical points are marked with small circles on the curve of s.

Under M.E.P. we give in Table 64 C, first the actual mean effective pressure P, then the unbalanced pressure $\Delta P = P - P_2 = P - 20$. Substituting in Eq. (350) we get the speed change ΔN. Here it is necessary to give both engine-speed N_E and governor-speed N_G, the latter being used when finding the centrifugal force-effect. The balancing-speed N_B, corresponding to the actual position of the governor, is found graphically from Fig. 548 after the whole calculation has been finished and s determined: its usefulness will be brought out presently.

Forces in the Governor.—The problem of force-action and resulting motion now before us is one that can be solved only by a trial method. We know the conditions at the beginning of any computation-period, as given, for instance, in line zero of Table 64 C for the first calculation to be made; but the values of W, F, and M at the end of this period depend upon the final value of s, or upon the distance moved by the governor during the period. We must therefore estimate the probable value of s, measure the forces and mass from Fig. 548, run through the calculation and find s; then if this computed value does not agree pretty closely with the estimated governor-position, new measurements must be made and the operation repeated. Only final calculations are shown in the table, the value of s under "Est." being that for which W, F_{100}, and M are measured from the curves.

The computation of $F = F_{100} \times N_G^2 \div 100^2$ is the only one in the whole operation for which the slide-rule is not always sufficiently accurate—although in this case slide-rule values are used. Having found F, we get the free force $f = F - W$; then the mean of the values of f at the beginning and at the end of the period is the average force which acts during the period Δt, upon the average mass M_m.

Movement of the Governor.—Having force and mass, the change in velocity of the reduction-point in the time Δt is found by the equation of momentum,

$$M_m \Delta v = f_m \Delta t, \quad \text{or} \quad \Delta v = \frac{f_m \Delta t}{M_m}. \quad . \quad . \quad . \quad . \quad (351)$$

Digitized by Google

Then values of v are averaged to get v_m, and the change in position, reduced to inches, is got by the operation

$$\Delta s = 12 v_m \Delta t. \quad . \quad . \quad . \quad . \quad . \quad . \quad . \quad . \quad (352)$$

Before discussing the action shown by Figs. 549 to 551, we will make several determinations of the same sort for the shaft-governor in Fig. 539, and then consider the two examples together. As to the various adjustment curves, it is considered that the full particulars given under Figs. 550 and 551, with the marking of all the scales on each figure, should make them sufficiently clear, without further description or explanation—except that the meaning of N_B and s_N is yet to be brought out, on page 411.

(*d*) INERTIA-FORCE IN FIG. 539.—For the computations outlined in Table 64 D the data and formulas are as follows, all the linear symbols being defined on Fig. 526 or Fig. 539:

Referring to Fig. 526, we have first

$$\text{Force of tangential inertia} \quad I_T = M\omega R. \quad . \quad . \quad . \quad . \quad . \quad (353)$$
$$\text{Moment of angular inertia} \quad T_A = M\omega k^2. \quad . \quad . \quad . \quad . \quad . \quad (354)$$

We shall take the unit of acceleration to be $\omega = 1$ R.P.M. per second, or for ω use the value 0.1047. In applying actual dimensions in (353) and (354), the radius R and one factor k must be reduced to feet. Then for $\omega = 0.1047$, and R and k in inches,

$$I_T = \frac{W}{g} \times 0.1047 \times \frac{R}{12} = .0002715\ WR \text{ lbs.}; \quad . \quad . \quad . \quad (355)$$

$$T_A = \frac{W}{g} \times 0.1047 \times \frac{k^2}{12} = .0002715\ Wk^2 \text{ lb.-ins.} \quad . \quad . \quad (356)$$

For piece 2 we reduce I_T by the relation—compare (333)—

$$I_T h_2 \theta_2 = I_{TR} Q\, \theta_4,$$

or, substituting from (355), with W as given in the table,

$$I_{TR} = I_T \frac{h_2}{Q} \frac{\theta_2}{\theta_4} = .001324\ R_2 h_2 \frac{\theta_2}{\theta_4}. \quad . \quad . \quad . \quad . \quad (357)$$

Digitized by Google

For I_A the method is

$$T_A\theta_2 = I_{AR}Q\theta_4,$$

$$I_{AR} = \frac{T_A}{Q}\frac{\theta_2}{\theta_4} = 0.439\frac{\theta_2}{\theta_4}. \quad . \quad . \quad . \quad . \quad . \quad . \quad (358)$$

For piece 3 we get I_T and multiply it by V_{3I} from Table 63 E, the formula reducing to

$$I_{TR} = \frac{W}{g} \times 0.1047 \frac{R}{12} V_{3I} = .00136\, RV_{3I}; \quad . \quad . \quad (359)$$

while for angular inertia we need only change the constant in (358) to .00477, as determined by the different values of W and k.

Similar substitutions give constants as follows:

for 4, .00987 in (357), while I_{AR} is constant.
for 56, .00122 in (359).

TABLE 64 D. REDUCED INERTIA FORCES IN FIG. 539.

Position.		1	2	3	4	5
Piece 2	R_2	16.23	16.97	17.66	18.30	18.90
$W = 32.9$	h_2	−3.41	−4.00	−4.51	−5.00	−5.43
$M = 1.023$	θ_2/θ_4	1.444	1.452	1.477	1.520	1.607
$k = 5.75$	I_{TR}	− .1057	− .1306	− .1556	− .1850	− .2180
	I_{AR}	− .0634	− .0637	− .0648	− .0667	− .0705
Piece 3	R_3	11.48	10.59	9.65	8.69	7.65
$W = 5.0$	V_{3I}	−1.343	−1.294	−1.254	−1.216	−1.196
$M = 0.155$	θ_3/θ_4	−0.000	−0.050	−0.103	−0.167	−0.261
$k = 4.86$	I_{TR}	− .0209	− .0186	− .0164	− .0143	− .0124
	I_{AR}	+ .0000	+ .0002	+ .0005	+ .0008	+ .0013
Piece 4	R_4	2.52	2.02	1.52	1.02	0.54
$W = 24.5$	h_4	−0.67	−0.28	+0.19	+0.92	+2.43
$M = 0.763$	I_{TR}	− .0017	− .0006	+ .0003	+ .0009	+ .0013
$k = 4.08$	I_{AR}	− .0165	− .0165	− .0165	− .0165	− .0165
Piece 56	R_{56}	11.27	10.73	10.23	9.75	9.30
$W = 4.5$	V_{5I}	−0.897	−0.875	−0.871	−0.873	−0.898
$M = 0.140$	I_{TR}	− .0123	− .0115	− .0109	− .0104	− .0102
Total	I_T	− .1406	− .1613	− .1826	− .2088	− .2393
Reduced	I_A	− .0799	− .0800	− .0808	− .0824	− .0857
Inertia	I	− .2205	− .2413	− .2634	− .2912	− .3250

Digitized by Google

With these various coefficients the results given in Table 64 D are obtained, all of the data except h being repeated from preceding tables. As to the algebraic signs, which show whether inertia works with or against centrifugal force, it is easier to determine these by simple inspection of the mechanism than to formulate and apply general rules. It will be noted that the distinction in sign begins with the determining lever-arm h or velocity-ratio V_I. In this illustrative example all the possible forces are determined, without regard to their relative importance; a simple preliminary exercise of judgment would indicate that such small forces as I_{3A} and I_{4T} might be neglected. The final value of I is plotted on Fig. 552.

TABLE 64 E. REDUCED MASS IN FIG. 539.

Position.		1	2	3	4	5
Piece Mass-units	2	3.703	3.740	3.872	4.103	4.585
	3	0.576	0.579	0.591	0.603	0.656
	4	0.751	0.751	0.751	0.751	0.751
	56	0.239	0.216	0.199	0.183	0.181
TOTAL	M_R	5.269	5.286	5.413	5.640	6.173

(*e*) REDUCED MASS IN FIG. 539.—In this determination we follow Eq. (338), except that ratios of linear velocities must be used with pieces 3 and 56. Again, linear symbols are given on Fig. 526, certain important dimensions on Fig. 539. Stated as concisely as possible, the methods used in getting Table 64 E are as follows:

PIECE 2. $M = 1.023$; $k = 5.75$; $r = 6.58$; $Q = 6.75$:

$$K^2 = k^2 + r^2 = 76.46; \quad Q^2 = 45.56.$$

$$M_R = M\frac{K^2}{Q^2}\left(\frac{\theta_2}{\theta_4}\right)^2 = 1.777\left(\frac{\theta_2}{\theta_4}\right)^2 \quad . \quad . \quad . \quad . \quad . \quad . \quad (360)$$

PIECE 3. Since the angular velocity is so small, consider the mass as if concentrated at the center of gravity; then

$$M = 0.155, \quad M_R = MV_3^2, \quad . \quad . \quad . \quad . \quad . \quad (361)$$

V_3 being taken from Table 63 E, line 3.

Digitized by Google

PIECE 4. $M = 0.763$; $k = 4.08$; $r = 5.31$; $K^2 = 44.90$:

$$M_R = K^2/Q^2 \times M = 0.985 \times 0.763 = 0.751.$$

PIECE 56. $M = 0.140$; $M_R = MV_S^2$.

(*f*) DATA CURVES FOR THE AMES GOVERNOR.—Examination will show that the curves of B, F_{100}, and N on Fig. 552 do not quite correspond with the numerical values in Tables 63 H and I. The latter are correct for the primary data, a minor error being included in the determination of F as plotted on the figure: this is compensated by a slight change in the scale of the spring, and the only difference of any real importance is found in the fact that here the regulation is a little less close than in Table 63 I. This difference could be made by a small change in the amount of shot in the hollow head of arm 2, so that while not in absolute agreement with Fig. 539, the curves in Figs. 552 to 554 are truly representative of the action of the governor.

The rapid drop in the curve of P (the M.E.P.), which falls to zero just beyond position 4, is due to the great offset from the crank-line of the pivot-point P in Fig. 539. This makes the E-locus draw in toward the center O, so that it cuts the lap-circle before the governor reaches its outer limit. The action is like that in Fig. 360 III., but is not here determined with any great accuracy.

The fly-wheels on this engine weigh 2100 lbs., at an effective mean radius of 40.1 ins. One pound of free M.E.P. is equivalent to a total force of 113.1 lbs. on the 12-inch piston, which reduces to 10.77 lbs. at the wheel-rim (where it will directly accelerate the latter), according to the work-equation or virtual-velocity relation,

$$\Delta P_R = \frac{113.1 \times 12}{3.142 \times 40.1} \Delta P = 10.77 \Delta P. \quad . \quad . \quad . \quad . \quad (362)$$

In the time Δt this force, acting on the wheel-mass $M = 65.3$, will produce the velocity-change ΔV; which, at the end of the radius $40.1 \div 12 = 3.34$ ft., is equivalent to a change in angular velocity

Digitized by Google

of the value $\Delta\theta = \Delta V \div 3.34 = 0.1047 \Delta N$; whence

$$\Delta N = \frac{10.77}{65.3 \times 3.34 \times 0.1047} \Delta P \Delta t = 0.471 \, \Delta P \Delta t. \quad . \quad . \quad (363)$$

(*g*) ADJUSTMENT BY THE AMES GOVERNOR.—The form for calculation with this governor is the same as in Table 64 C, except that columns must be introduced for the angular acceleration $\omega = \Delta N / \Delta t$, and for the force of inertia $f_2 = I\omega$—an example being set forth in Table 64 G. Under our ordinary assumption as to wheel-acceleration in (*c*), this inertia-force is constant throughout each half-revolution. Of the two curves marked *F* on Figs. 553 and 554, the dotted line shows centrifugal force alone, the full, stepped line adds inertia: then the free force to move the governor is included between the latter curve and the balancing-force *B*. It is evident that, except at the beginning of the movement, the inertia-effect is relatively insignificant.

(*h*) BEHAVIOR OF THE CENTRIFUGAL GOVERNOR.—We now take up a general discussion of the action represented by Figs. 549, 550, 553, and 554. The primary conditions are as follows:

The engine has been running at the constant speed N_1, under the load P_1, with the governor resting at s_1 and equilibrium between the centrifugal force *F* and the balancing-force *W* or *B*. For the sake of simplicity, we use only the average effect of the force *P*, or take the turning moment on the shaft to be constant (against a uniform load-torque), with abrupt changes, when the governor is moving, at the end of each half-revolution (corresponding roughly to the cut-off). To get the most severe conditions, we make the act of adjustment begin with an instantaneous change of the load from P_1 to P_2, just after a "cut-off." The important questions to be answered are, how rapidly does the governor move to the new load-position s_2, how quickly and positively does it there come to rest, and how much fluctuation in the mean speed of the shaft does it permit?

The governor requires some little time to get into motion, partly because of its own inertia, chiefly because a free force to accelerate it is developed only as the speed of rotation changes.

Digitized by Google

ADJUSTMENT DIAGRAMS FOR CENTRIFUGAL CHAFF-GOVERNOR, FIG. 550.

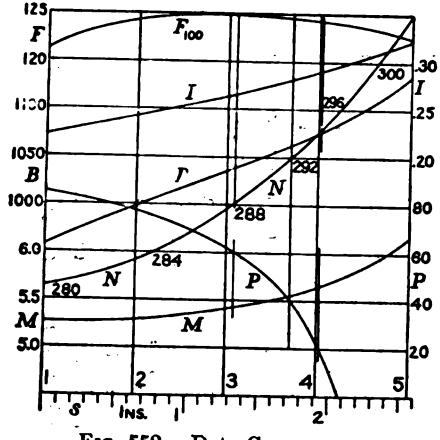

FIG. 552.—Data Curves.

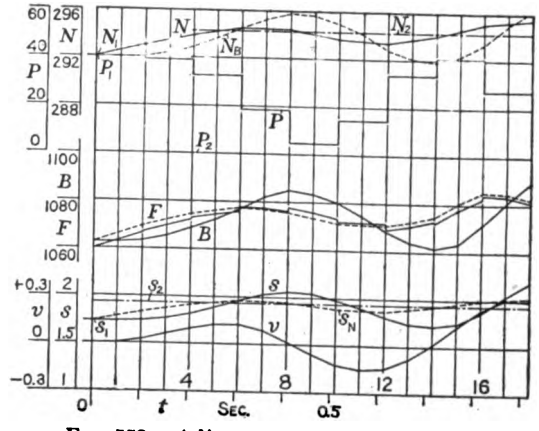

FIG. 553.—Adjustment A, $P_1 = 40$. $P_2 = 20$.

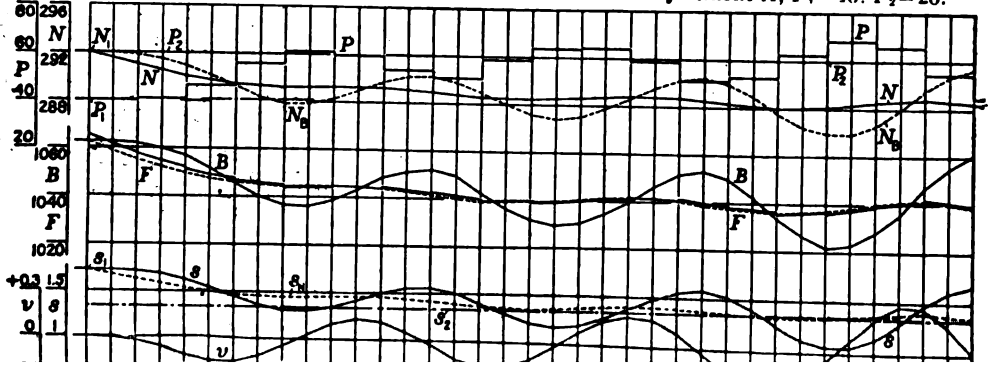

Digitized by Google

During the first revolution, then (four periods on any figure), the unbalanced M.E.P. is large and the engine-speed varies rapidly. The effect of this variation, as to its tendency to move the governor, is best exhibited by plotting the curves marked N_B and s_N. The first shows the speed at which, for any actual position s, the governor forces would be in equilibrium, or it is the balancing speed. Conversely, s_N shows the position which the governor would have to occupy, for any actual speed N, in order that there might be equilibrium, or it is the balancing position. The free force f, active to accelerate the governor-mass, varies with the difference between N and N_B, or with the distance $(s - s_N)$.

As the governor acquires velocity it moves more rapidly than the engine-speed varies, presently coming to a position of equilibrium, where the curve of s crosses that of s_N, or N crosses N_B. But by virtue of the stored-up initial acceleration (or kinetic energy) it swings past this neutral point, travelling onward until checked by the reversed force f; whereupon it swings back again, and thus s oscillates about s_N until the initial energy is absorbed by some brake-action not shown on these diagrams.

In the governor of Fig. 461, this energy-absorbent is furnished by the oil-brake or dash-pot. For the shaft-governor which we are discussing, friction in the mechanism performs the same service.

It will be noted that all the curves show essentially the same kind of action, whether we compare changes of different amplitude, as in Figs. 549 and 550, or changes in opposite directions, as in Figs. 553 and 554. But the differences in detail are greater in the latter comparison, chiefly because the inclination of the M.E.P. curve is so different on the two sides of the starting-point at $P_1 = 40$ lbs.

(*i*) Stability in Adjustment.—Of the four examples under consideration, the least favorable action is shown in Fig. 553. In the others, the first long swing, from s_1 to the crest of the first wave beyond s_N, carries s just about to s_2, while leaving N somewhat short of N_2. Probably no simpler statement of the condition for stability in adjustment can be found than to say that the governor should move so smartly as thus to pass the engine-speed (where s crosses s_N) and come nearly to position (to s_2) at the end

Digitized by Google

of the first long swing, with zero-velocity; thereafter the brake-action must damp out the oscillation of s about s_N. More favorable than any of these three examples would be the same action as modified by a brake-force of proper intensity: this would retard the movement enough to let N get nearer to N_2 and let s go a little farther past s_2. But to have the governor come to position with full velocity, as in Fig. 553, is likely to make it swing too far and shows the need of a stronger brake-force.

Fig. 551 supports and enforces the condition of *stability* above stated: on account of a very light fly-wheel, taken only one-fourth as heavy as in Eq. (350), the engine-speed here changes so fast that the governor cannot even keep up with it; as a result the state of zero acceleration or of maximum velocity *is not* reached till after s has passed s_2, while the maximum s is far out; and an oscillation is set up which only a very powerful *oil-brake* could check.

This brings out the important fact that a *sufficiently* heavy fly-wheel is a major element in determining the effectiveness of a governor; and shows further that, with decrease *in its* weight, smartness of the wheel in responding to the torque on the crank increases more rapidly than does smartness of the governor under the corresponding increase in the force f.

It is then the function of the heavy fly-wheel to give the governor more time to act: correlative to this is the principle that smartness of the governor is increased by giving it a small mass with large forces acting—as by using small weights far out from the center of rotation. To have a small mass controlled by large balancing forces insures that s shall follow s_n closely, and *cuts* down the oscillation of s; then less brake-action is needed, or closer regulation can be secured without the use of a dash-*pot*. It must be borne in mind, however, that the light governor is more affected by irregular external forces, that is, by the reaction of the valve-gear.

(*j*) Oscillation of the Governor.—Consider first the oscillation set up during adjustment, with brake-action left out of account as in the example before us. The wave-motion of s with reference to s_N as a center is very nearly the same as the sine-curve movement

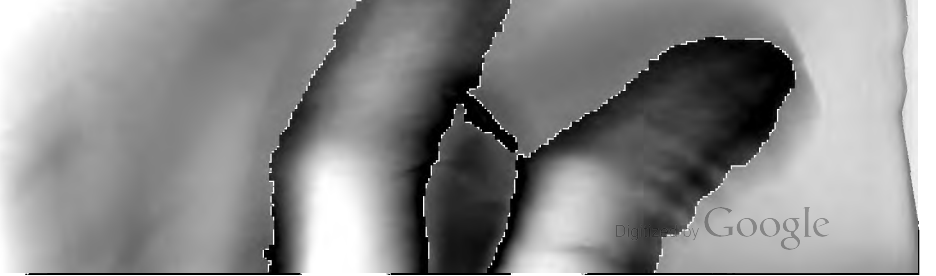

Digitized by Google

of a swinging pendulum. For this simple case of a mass oscillating past a central position of equilibrium, under the action of a restraining force which points always toward the center and varies in intensity directly as the distance from the center, the time for a single swing is

$$T=\pi\sqrt{\frac{M}{n}}; \quad . \quad . \quad . \quad . \quad . \quad . \quad . \quad . \quad (364)$$

where M is the mass of the body and n is the ratio of the restraining force to the distance, so that the force is $F=-ns$. To apply this to the governor in Fig. 537, we measure on Fig. 538 the rate of divergence between curves I. and II., at position 4, and find it to be 7.5 lbs. per inch of s, or 90 lbs. per foot. Substituting, then, in (364), $n=90$ with $M=6.82$ (from Table 64 B), we get

$$T=\pi\sqrt{\frac{6.82}{90}}=0.865 \text{ seconds.}$$

Measurement of the wave lengths on Figs. 549 and 550, or of the distances between points where s crosses s_N, give periods ranging from 0.84 to 0.94 seconds, showing how nearly the motion of the governor agrees with this simple, ideal action.

Under any single set of the conditions for which (364) is derived, the time of the oscillation is independent of its amplitude. But in the governor, it appears that a change which makes T longer will increase the magnitude of the extra movements, by giving the disturbing effects a longer time in which to accumulate. Since stability is secured by keeping s close to s_n, Eq. (364) emphasizes the need of a small mass in the governor, and shows further that the correlative requirement is a sufficient value of the force-ratio n. Since this sufficient restraining force can be got either by coarse regulation with small balancing forces (see Fig. 538), or by close regulation with large forces, we see the connection between stability in adjustment and sensitiveness of the governor. As the governor is to regulate more closely, the larger must be its principal forces in comparison with its mass—always bearing in

Digitized by Google

mind that the other kind of stability (against the periodic turning forces) calls for the presence of a sufficient mass.

An important fact in regard to this major oscillatory movement is made evident when we note that on account of the influence of the governor-travel s upon the M.E.P. and the [illegible] has a small oscillation similar and opposite to that of s [illegible] a little later in phase; then these two combine to produce a [illegible] increase in the amplitude of the relative oscillation of s. [illegible] 554 is carried out so far especially with the purpose of [illegible] this action; and in Figs. 549 and 550 we can likewise see [illegible] s swings outward in either direction, the curve of [illegible] from that of s thus increasing the distance $s - s_N$ upon which [illegible] force f is dependent. In order that the governor may settle [illegible] new position, the brake-force must at least do a little more than overcome this tendency of the oscillation to increase. It is [illegible] noted that the brake-force, in absorbing the energy of the oscillatory motion, will retard the swing or increase the time T.

As to the effect of inertia in this respect, it appears from Figs. 553 and 554 that the small negative inertia there present tends to check the oscillation—from which we infer that positive inertia would have the opposite (undesirable) tendency.

Another oscillation of shorter period and of small amplitude but which persists continually in the shaft-governor, is due to the effective component, along the path of E, of the variable valve-gear reaction. This force is roughly set forth in Figs. 541 and 542 and it behaves very much like the free turning-force in Fig. 14[illegible] tending to give the governor the same kind of a movement about its mean position s that the fly-wheel has about its mean state of uniform rotation. Detailed investigation of a number of governors, by Professor Klein, has failed to show a single case in which the stability in steady running or in adjustment was sensibly influenced by this secondary oscillation due to the valve-gear; although it is possible to imagine a governor having such proportions as to be seriously affected by this action. It is self-evident that a high speed of rotation and a large mass in the governor are the two influences which keep the valve-gear effect within the bounds of harmlessness.

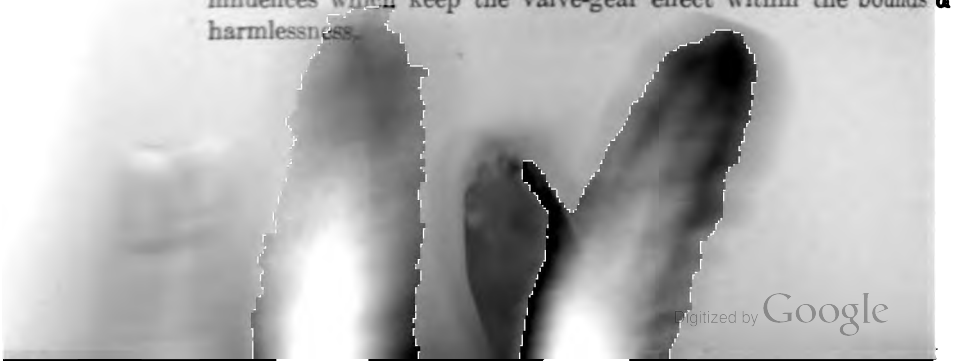

Digitized by Google

The condition most destructive of stability is to have a regular variation in the load on the engine which just happens to agree in interval with the period of oscillation of the governor. About the only thing that can do any good when these two get "into step" is a powerful oil dash-pot, but at the best it is a highly unsatisfactory state of affairs.

(*k*) BRAKE-ACTION IN THE GOVERNOR.—The need of some energy-absorbent, to bring the governor to rest at the end of an adjustment, has been made abundantly clear. The ideal brake would not at all retard the initial acceleration of the governor, but would come into action as s approaches s_2. The nearest approximation to this ideal is furnished by a good oil-brake or dash-pot, in which the resistance is due, not to thickness or viscosity of the oil, but to a proper graduation of the space for the passage of oil around or through the piston. This apparatus gives a resistance that varies as some higher power of its piston-velocity, reacting very feebly against a slow movement, but strongly checking a higher velocity of the governor.

On a vertical-axis governor, the fixed dash-pot is likely not to receive the care and attention that it ought to have. In a shaft-governor, the additional difficulty of retaining oil of the proper fluidity without introducing too much stuffing-box friction makes the use of an oil-brake rather impracticable. The designer therefore seeks for proportions and conditions which will give stability without a dash-pot: and the only brake-force that offers itself is the friction in the mechanism. A great drawback is that friction opposes just as strong a resistance to the initial movement as it does to the undesirable oscillation of the governor. The case evidently calls for a nice adjustment of force-relations, for while an absolutely frictionless governor would oscillate indefinitely, one with too much friction will make all kinds of trouble.

If we wish to determine the friction in a governor, so as to include it in the mechanical discussion of (*c*) or (*g*), the easiest way is to find by means of graphic statics all the forces, including those at the joints or bearings, making the construction without considering friction. Knowing the pin-pressures, the pin-diameters, and the relative motions, we can calculate the actual, tangential

Digitized by Google

frictional resistances, and reduce them to the same point as the other forces by the usual method of virtual velocities. This is easier and more accurate than to use the complete graphical method of making a second construction with friction (using friction-circles) and comparing results with the no-friction case.

Various designers have, as might be expected, followed quite different lines in developing their ideas as to this phase of the subject. At one extreme is an attempt to use knife-edges for the joints subjected to heaviest pressures; at the other is the employment of a very large bearing for the eccentric-pendulum, in order that its friction may act as a brake against the valve-gear reaction, as well as for the governor as a whole. An extreme case is the older Ball and Wood governor, used with the valve in Figs. 251 and 422 III.: the pendulum-piece is nothing but a large ring, turning on a disk fast upon the wheel, and carrying a small pin for the eccentric proper. The idea was that when the valve-gear force was greatest, a strong frictional resistance would oppose it and check any movement of the governor, while at the parts of the revolution where the valve-force is small, the governor is left free; as a result, any movement, in adjustment or otherwise, will be by jerks rather than continuous. The same use of a large bearing can be seen on the governor in Fig. 201.

(*l*) CONDITIONS OF STABILITY.—The important points brought out in the last four articles may be briefly summed up as follows:

The fly-wheel should be heavy, so that the free forces in the governor will be moderate, and yet that the governor, with a movement determined by these moderate forces, will have time to follow the changes in engine-speed with requisite promptness.

The governor must have a small mass and relatively large balancing forces, especially as the regulation is closer, or as the variation of the steady speed with the load is less.

There should be such a relation between these major conditions that the initial movement will be as in Figs. 549, 550, and 554, or as these movements would be under the retardation of a proper brake-force.

Digitized by Google

Some brake-force is essential, to damp out the oscillation which is set up in any adjustment-action. While friction performs this function in most governors, it is highly important that this friction shall not be, or become, excessive.

The preceding statements refer chiefly to stability or positiveness in adjustment under a change of load. For steadiness under the periodic fluctuating forces (within the revolution), of which the valve-gear reaction is by far the most important, high speed of rotation and a sufficient mass in the governor are the chief requirements. If the valve has a high resistance, or one that is liable to sudden great changes, the difficulty of driving it by a shaft-governor increases rapidly and may become prohibitive.

It would be possible, by further research and by a mathematical treatment of the subject, to reduce some of these requirements to more or less approximate quantitative expression—several equations of stability having been derived and published by different investigators. For present purposes, however, it is enough to have brought out clearly the general principles involved. It may be remarked that in its deeper detail the question of governing is more markedly a subject for the specialist than is probably any other matter in connection with steam-engineering.

(*m*) The One-piece Inertia Governor.—To get some idea of the force-action in a governor of the type in Fig. 531, we shall now analyze the example outlined in Fig. 555, which is not an

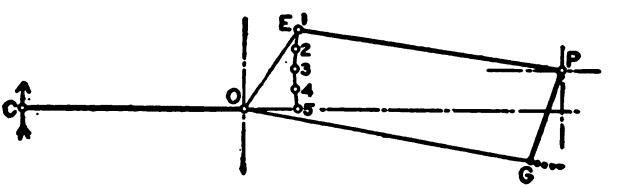

Fig. 555.—Outline of Governor of the Rites Type.

actual design, but is simply assumed for illustration. All that need be expressed graphically, of the single moving piece, is the eccentric-pendulum PE and the center of gravity at the end of a radius PG. Everything else is contained in Table 64 F.

Digitized by Google

[illegible]

Fig. 556.—Data Curves for Fig. 555.

Fig. 557, Adjustment, $P_1=40$, $P_2=20$.

mine a spring which will give the r … ing force R, but the speed N is assumed and the corres… lly

ere incorporated into the design. Since mass and inertia-effect e constant, only four curves need be plotted on Fig. 556. ıe fly-wheel effect is expressed by the formula $\Delta N = 0.3\, \Delta P \Delta t$, ıich makes the wheel relatively heavier than with Fig. 539.

The method of calculation is outlined in Table 64 G, to show ow it differs from that in 64 C; but the third section, which mains unchanged in form, is not repeated. Under "Speed" e have the additional item $\omega = \Delta N/\Delta t$ = here $0.3\, \Delta P$, to be used calculating the inertia force $f_2 = I\omega$. The angular acceleration is expressed in R.P.M. of change per second, and since I is calcuted and reduced for one unit in this measure, we get the force E in pounds by the multiplication just indicated. After the ee centrifugal force $f_1 = (F - B)$ has been determined and averaged r the period, f_2 is added to it in order to get the total force f.

TABLE 64 G. FORM FOR CALCULATION OF ADJUSTMENT, WITH INERTIA.

Calc. No.	Time. Δt	M.E.P. P_E	M.E.P. ΔP	Speed. ΔN	Speed. ω	Speed. N	Speed. N_B
0		40.0				241.75	241.75
1	.0618	40.0	+20.0	+.370	+6.00	242.12	241.80
2	.0618	"	"	"	"	242.49	241.92
3	.0617	37.9	+17.9	+.331	+5.37	242.82	242.20
4	.0617	"	"	"	"	243.15	242.57

TABLE 64 G.—*Continued.*

Forces. B	F_{100}	F	f_1	f_{1m}	I	f_2	f
1654.4	283.10	1654.4					
1656.0	283.20	1660.0	+4.0	+2.0	3.63	+21.8	+23.8
1658.7	283.41	1666.5	+7.8	+5.9	"	+21.8	+27.7
1665.3	283.93	1674.0	+8.7	+8.3	3.63	+19.5	+27.8
1674.3	284.58	1682.4	+8.1	+8.4	"	+19.5	+27.9

Digitized by Google

On Fig. 557 we plot, not the total forces B and F, but only the unbalanced force f. As in Figs. 553 and 554, the dotted curve shows f_1, the broken full-line curve adds f_2 to it, or shows f as the ordinate from the zero-line.

The most important fact shown by Fig. 557 is that, in spite of the considerable inertia-force that comes into full action instantaneously when the acceleration of the wheel begins, the governor is slow at catching up with the speed, not passing it before s gets to s_1. There is therefore a positive force-action up to this point, so that the governor reaches "position" with full velocity, and swings away past the desired stopping-place, thereby initiating an excessive oscillation. The reason for this behavior, characteristic of the mechanism, is the very great mass as compared with the free forces acting. Inherently, inertia due to acceleration of the wheel, or of the governor as a whole, is a far smaller force than the radial inertia which we call centrifugal force—this with any angular acceleration that can be permitted by a fly-wheel of at all sufficient weight. It is also a characteristic of this type of governor that the centrifugal effect is kept relatively small, as appears from the location of the center of gravity in Fig. 531. Since therefore no reversed force is available in the governor itself until after it has passed the new load-position and reversed the free M.E.P., there must be a very considerable brake-action introduced, with the drawback that the initial forces are thus partly neutralized. It is difficult to see, from this simple analysis, just how the governor effects the quick and positive adjustment with which it is generally credited.

It is of interest to note that, as regards the effect of torque-inertia—designated above as I_A or T_A—upon the movement of the governor-arm, the disposal of the mass of this body is immaterial. Turning from reduced mass back to the actual body, we see that the most it can do on account of its own inertia is to continue to rotate at constant velocity while the wheel speeds up or slows down. In our method of calculation, we get the resistance of the governor-piece to acceleration with the wheel and then apply this as an active force to accelerate the arm backward in the wheel—with the result that, so far as torque inertia alone is concerned, the

Digitized by Google

angular velocity of this body remains constant. Giving it the usual form of a long bar with heads, or making its "moment of inertia" large, simply increases its resistance to acceleration by other forces.

The example in Fig. 555 has rather poor proportions, because the center of gravity is too far from the shaft center O and too near the pivot P. To get the same effect with a small pin-pressure, P is brought nearer to O, and G with it; and to compensate for the decrease in R the lever-arm H is made longer. With the proportions here used the friction at the pin, with an ordinary solid bearing, would be equivalent to from 15 to 20 lbs. when reduced to the path of E; so that it is not hard to see where any desired amount of brake-force can be got, even without the actual brake which is sometimes used.

§ 65. Various Special Regulators.

(*a*) Combined Speed and Pressure Governor.—An air-compressor governor like that in Figs. 222 and 223 is shown in detail by Fig. 558. In its mechanism for regulating speed, it is a good representative of a large class of throttling governors, used on small engines in various lines of service: but the addition of an apparatus for controlling by air-pressure calls for some special points in the arrangement, to meet the requirement that either device shall be able to act on the valve, independently of the other.

The main mechanism, consisting of pulley-spindle 1, hollow governor-spindle 2, and fly-balls 3, 3, is self-evident. Through the rod 4 and the intermediate pieces 5 and 6, the valve 8 is pushed down when the balls fly out, throttling the steam. This valve, being of the piston rather than of the double-seated disk form, is perfectly balanced, so that the very light stem 7 is sufficient: and the cross-bar below the valve insures that it shall never fall so far as to admit steam when it is intended to be closed. Piece 5 is held against 4 by the first spring, acting through lever 9; similarly, 6 is held against 5 by lever 12, the springs both having a certain share in determining the running-speed. From the top

Digitized by Google

of f. a small pin or spindle projects into a central hole in 5, to keep these parts always in line.

The pressure-governor consists of the cylinder 18, receiving the air-pressure at C, with the plunger 17 and the weighted lever

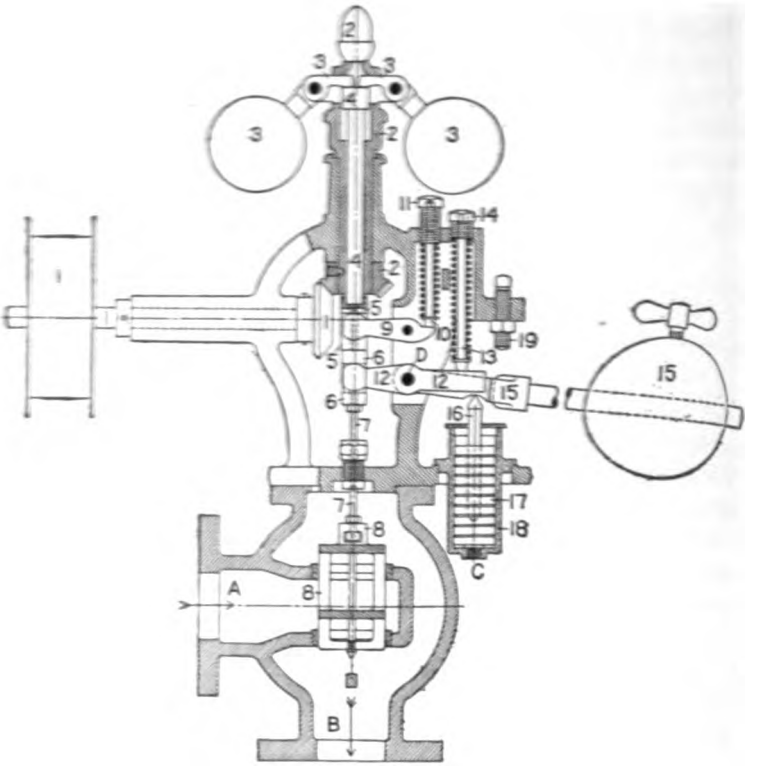

FIG. 558.—Gardner Governor for Air-compressor.

15 which is pivoted at D. When the pressure gets to the desired maximum and raises the weight-arm, the knife-edge on the upper end of 16 pushes against the outer end of lever 12 and closes the valve. The stop-screw 19 can be set so that steam will not be quite shut off by this action, for when the compressor is completely stopped, it may be in a position from which it will not start when steam is again admitted.

Digitized by Google

This last possibility is much greater with a single machine like Fig. 222 than with a duplex compressor. To eliminate such a source of annoyance, a device called an "unloader" is used when circumstances call for it. Actuated by the pressure of the discharged air, this apparatus removes the load from the compressor-piston at the same time that steam is nearly shut off from the steam-cylinder. One scheme is to close the air-inlet, so that the piston moves back and forth against a low variable pressure; another opens some of the discharge-valves at both ends, so that equal high pressures are maintained on both sides of the piston. In either case, the machine continues to run at moderate speed, ready to respond at once to a drop of pressure in the air-receiver.

(*b*) SAFETY STOPS.—The ordinary non-automatic safety-stop for an engine with releasing valve-gear is well typified by the simple device shown on Fig. 461; but any such stop-ring or stop-pin arrangement has the decided disadvantage that it depends upon fallible human nature for being put into the service-position, and that when there it renders the engine liable to a summary shut-down by a sudden overload. Since breakage of the driving belt is the most frequent occasion of governor-stoppage, the usual scheme for making the safety-device automatic is to connect it to a pulley which rides on the governor-belt as in Fig. 559. At I. is sketched a stop S which is normally in position to support the arm L on the governor-slide: through the rod R it is connected to a lever like 2 in drawing II., so that dropping of the pulley will throw S to the left, and let the governor come all the way down.

In Fig. 559 II., the fall of pulley 3 moves the cam-rings directly, without waiting for the governor to slow down. As better shown at A, the bent lever 6, from the governor, takes hold of the rocker 5 with a spring-catch. Against the push of the trip-arms upon the cut-off cams (shown in direction by the arrows), 6 pushes solidly on 5; but if the pulley drops, the slotted bar 4 will easily pull the pin on 5 out from under the spring on 6, and rotate 5 in the left-hand direction, or that for earliest cut-off: so that here the same cams serve both for ordinary cut-off and to prevent valve-opening in an emergency. Further, since a moderate pull on one

Digitized by Google

of the governor-rods will thus release the cam-system from governor-control, the engine can be quickly shut down by hand if occasion arises.

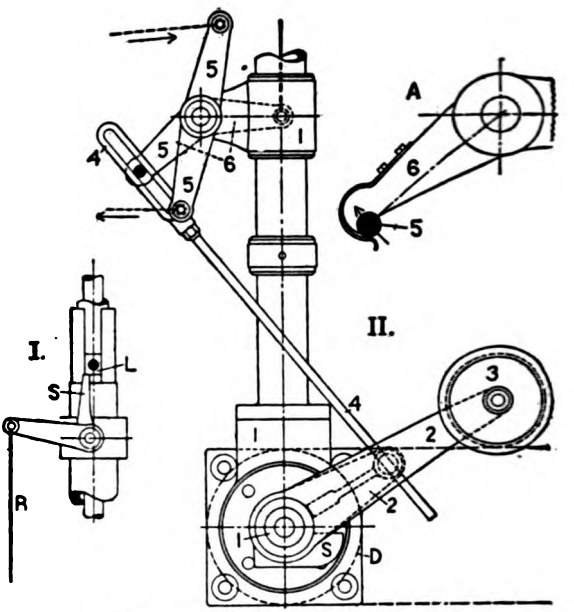

FIG. 559.—Safety-stops for Corliss Engines.
II. Reynolds-Corliss (Allis-Chalmers).

Another type of speed-limit consists of an extra stop-valve above the main throttle, controlled by a special governor—see Fig. 219. The valve, usually of the oscillating plug type, like a Corliss engine-valve, is held open by a ratchet-detent, against the pull of a weight upon an arm keyed to the valve-spindle. If the speed rises to the maximum for which the second governor is set, the ratchet is released and steam is shut off instantaneously. This stop-valve is arranged to be thrown by hand also; and if with it there is a vacuum-breaker, to open the condenser to atmospheric pressure, the fullest control for quick stoppage is secured.

Similar to the last device in general principle is the independent safety-stop, which can be mounted on any engine, to shut the

Digitized by Google

main throttle-valve in emergency. In one quite common device, a weight is hung on a band wrapped upon a small drum; the spindle of this drum is connected by sprocket-wheels and a chain to the valve-spindle; and the drum is held by a ratchet-pawl which can be thrown out by means of an electro-magnet. Push-buttons, located wherever convenient, make it possible to stop the engines from various points in the engine-room or in the factory.

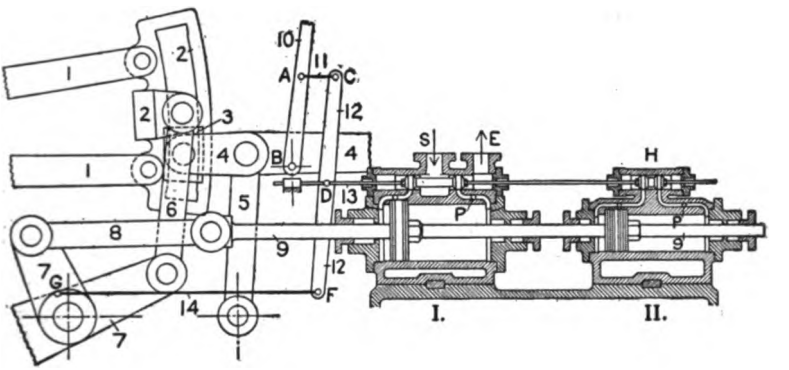

FIG. 560.—Reversing-gear for Engine in Fig. 221.

(c) REVERSING-GEARS.—On large reversing-engines, as in rolling-mill, hoisting, and marine service, the link-motion must be moved by mechanical power; the first class mentioned presents the most severe conditions, because the engine has to be quickly reversed and at very short intervals. The gear belonging to Fig. 221 is shown in Fig. 560: it is moved by the steam cylinder I. and held by the hydraulic cylinder II. The main valve-gear, pieces 1 to 6, needs no description; rocker 7 is heavily counterbalanced at the left. The secondary valve-gear begins with the hand-lever 10, pivoted at B, which moves the valve-rod 13 by means of the floating lever 12. This gear is of the self-centering type; as lever 10 is thrown to one side or the other, it carries point C with it, moving the small piston-valves; but as the piston on rod 9 moves the rocker 7, the rod GF brings back the lower end of lever 12 so as to return the valve to mid-position. The farther 10 is moved, the farther will the pistons move before the valves

Digitized by Google

come to the holding-position. Cylinder II. acts as a brake and dash-pot, to keep the mechanism from moving too fast and to bring it more or less quietly to rest, and as a holding device, to keep it in the desired position—for which purpose an elastic fluid is not effective. In the valve-chamber of the hydraulic cylinder, the ends and the middle space must be connected by side passages: the valve simply controls the flow of the oil (generally used rather than water) from one end to the other of the cylinder.

A typical marine-engine, direct-acting reversing-gear is partly illustrated in Fig. 561, the view including only the steam-cylinder and its valve-gear. Movement of the controlling hand-lever (located as most convenient) is transmitted through rod 1 to lever 2, pivoted at A. This lever, acting upon a nut 4 through the blocks 3, moves the valve-rod up or down. As the cross-head H rises or descends, it turns the rod 5 by means of the long-pitch helix S_2, and thereby screws 5 through 4 so as to re-center the valve. From pins on H heavy rods run to a crank-arm on the reverse-shaft: above H is a hydraulic cylinder which holds the whole gear in any desired position.

In many marine engines, the link-motion system is moved by a little engine, which acts through a worm and wheel. With this latter "self-locking" mechanism, no holding-device is needed; but the self-centering idea must now be applied to the throttle-valve which admits steam to the small reversing-engine.

(*d*) INDIRECT GOVERNING.—Fig. 562 illustrates a type of arrangement used where the reaction of the valve-gear is so heavy that a very powerful governor would be needed to withstand this disturbing force. The particular device here shown belongs to an engine with the Joy valve-gear, the curved "link" being dotted in. The governor proper merely controls the little valve in the chamber detailed at A, this valve determining the admission and discharge of water to and from the cylinder C. Note that this cylinder moves, while the plungers P, P are held fast. The action of the whole mechanism, including the self-centering feature of the valve-gear, can easily be traced out; to get the desired relations, it is necessary to cross the pipes from the valve-chamber to the plungers, top port going to bottom end and vice versa. The

Digitized by Google

valve (at A) is made with small positive laps, as must be the case in any such device when the function of holding predominates over that of moving.

In very large engines of the releasing-gear type, as Fig. 219 for instance, this same general method is used, the governor acting through a small hydraulic cylinder. It is necessary, of course,

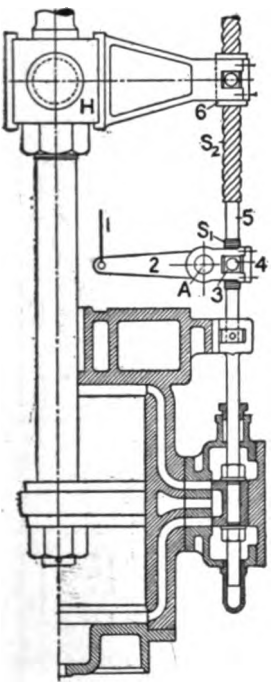

FIG. 561.—Part of Brown Reversing-gear, for Marine Engines.

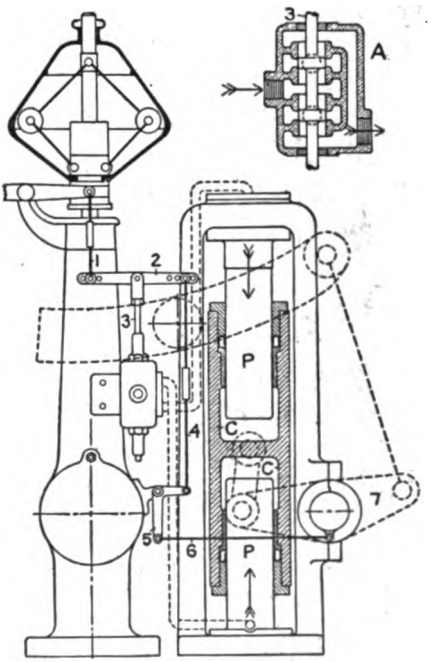

FIG. 562.—Governor for Van Vleck Engine, with Joy Valve-gear.

to have a supply of water under pressure to furnish the motive power for the actual work of adjusting the valve-gear. With a light, quick-running governor, this whole apparatus need be no more sluggish than the heavy governor that would be necessary for direct control.

Digitized by Google

(c) SPECIAL GEAR ON PUMPING-ENGINE.—In the valve-gears illustrated in Figs. 477 and 478 and in Fig. 480, the cut-off is varied by raising and lowering a fulcrum-block which carries an auxiliary wrist-plate. The governing mechanism belonging to the first example will now be described.

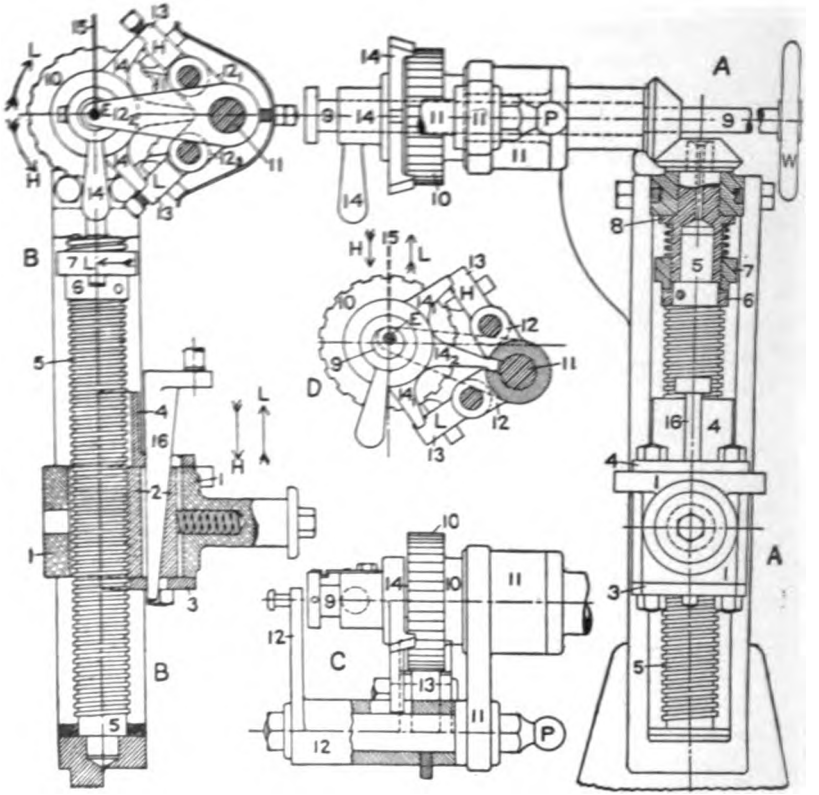

FIG. 563.—Pressure-controlled Governor for Snow Pumping-engine Gear, Fig. 477.

In Fig. 563, 1 is the fulcrum-block, moved and held by screw 5, which is turned by the ratchet-wheel 10. The pressure-governor, clearly visible just below the throttle-valve in Fig. 477, consists of a spring-loaded diaphragm and a system of levers coming down

Digitized by Google

the piece marked 15 in views B and D, Fig. 563. Excess of essure lowers 15, deficiency of pressure raises it. Since the mp delivers into the mains, excess of pressure indicates that it running too fast and should be checked. Referring to Fig. 478, see that raising block 1 makes the cut-off later, lowering it akes the cut-off earlier. Therefore the mechanism should be arranged that block 1 will go up or down with 15. The arrows arked H and L show the movements due to high and low pressure spectively.

A rod from the main wrist-plate, engaging the spherical pin P, ives a continuous oscillating movement to the lever 11, and to the ieces 12 and 14. The three-arm rocker 12 carries the two pawls 3 on the arms 12_1, while 12_2 is controlled by 15. In view B everything is in mid-position, E being right in line with the axis on which 1 oscillates; then the arms on 14 hold the pawls clear of the atchet-wheel, and the latter is not moved. In view D, pressure as fallen off, 15 is raised, and the pawl marked L engages the wheel, acting to raise 1 and increase the speed of the pump.

Views A and C show that piece 14 can be moved endwise along the spindle 9: by pushing 14 to the right, against 10, both pawls are held out, no matter what the position of 15; then 9 can be turned by a little crank on the hand-wheel W, so as to get any cut-off desired. If 14 is moved clear to the left—the little holding spring shown at C being pushed back—both pawls engage; then wheel 10 oscillates with 11, but without causing any net movement of block 1.

Some complexity is introduced by the safety devices. A persistent demand for more power—as when the governor is set for a high water-pressure and the boiler-pressure gets low—will bring the block to the top of the screw; and if the latter were rigidly driven, something would have to break. To meet this condition, the screw is driven by a jaw-clutch, made up of collar 6 keyed to the screw and collar 7 keyed to spindle 8, but free to rise against a spring. When 1 gets to its upper limit (giving latest cut-off), the sleeve on 4 lifts 7 clear of 6 and the screw ceases to turn. Note how the little keys or teeth on 7 are slanted on the bottom, so as to insure automatic return from this extreme posi-

Digitized by Google

tion; that is, 1 will rise until the short edge of the tooth just slips out of the slot; as soon as 7 reverses, it will engage 6 with the longer face of the tooth, and turn the screw back.

As to downward movement of 1, zero cut-off, or failure to open the valve, is reached before 1 gets to the bottom, so that there is no need of a releasing-device. In this direction acts the safety-stop for speed, intended to prevent a runaway in case of a sudden failure of load, as by the bursting of a pipe. Block 1 is not itself threaded for screw 5, but the thread is formed only on the partial nut 2, held between the caps 3 and 4. Wedge 16 is connected to the piston of a small cylinder carried on 1—see Fig. 564 I. A fly-ball governor is so arranged that when the limit of speed is reached, the weight W, Fig. 564 II., will be released from a catch

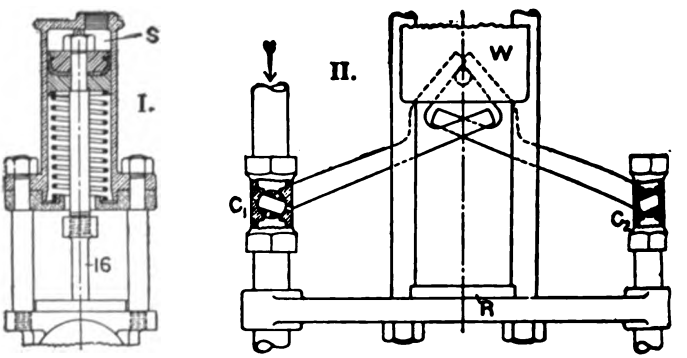

FIG. 564.—Detail of Speed-limit Governor, Snow Gear.

which holds it up and will fall to the cushion R. In falling it opens the cocks C_1 and C_2. The pipe to C_1 comes from a jacket drain, so that it contains water under the boiler-pressure; opening C_1 admits this pressure to the cylinder S, pushes down the wedge 16 and lets block 1 drop to its lowest position, shutting off steam from the engine. At the same time, opening C_2 admits air to the condenser, "breaking" the vacuum. Connection to cylinder S is made by means of swivel joints in the pipe.

(*f*) GOVERNORS FOR MARINE ENGINES.—The marine engine does not need an automatic governor to regulate its [illegible] running, because it generally works against a stea[illegible]

Digitized by Google

and receives close and constant oversight. What it does require is some device that will control a sudden burst of speed, as when pitching of the ship raises the propeller partly out of the water, and that will act as a safety-stop if shaft or propeller breaks. The ordinary fly-ball governor is not well adapted to this service, since it will be disturbed by motion of the ship, and must control indirectly, through a more or less sluggish mechanism: although an effective safety-stop can be secured by fastening a ratchet-toothed ring upon the engine- or propeller-shaft, to drive a mechanism which will close the throttle-valve when a centrifugal governor throws in the pawl. Attempts have been made to govern by means of the variation in external water-pressure at the stern or by the angular position (fore and aft) of the ship—the latter by fitting up a long horizontal pipe with risers at the ends, like a gigantic U tube; as the stern rises, water in this pipe will rush forward and might be made to operate a governing mechanism. It need hardly be said that these devices have failed to meet the requirement of promptness and reliability.

The Aspinall governor, now to be described, is probably the best marine governor that has been devised. The general scheme is shown in Fig. 565, where the governor is seen at G, mounted on an oscillating lever AB driven by the cross-head —the air-pump lever being used when the pumps are directly connected. The governor acts upon the lever L, to open or close the special "butterfly" throttle-valve V. The intermediate lever H is an essential part of the gear, because it makes possible a gravity-balance of the rods. Very often the governor is coupled in with a hand-control system.

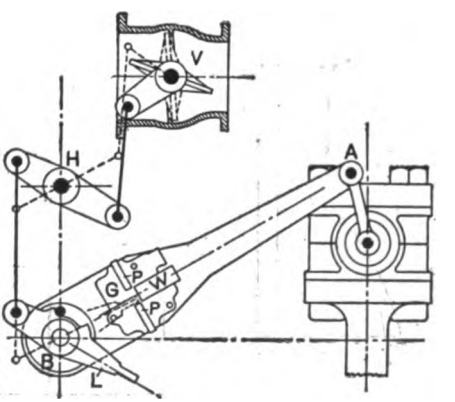

FIG. 565.—General Arrangement, Aspinall Governor for Marine Engines.

Digitized by Google

The construction of the governor is fully shown in Fig. 566, where the working parts are in mid-position; its action can be

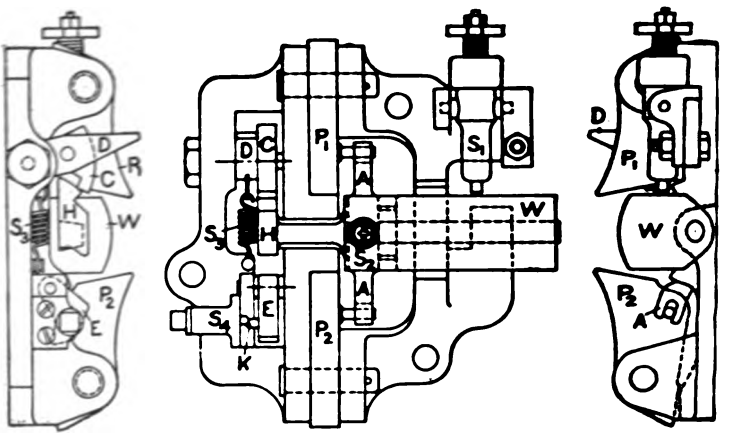

FIG. 566.—Aspinall Governor.

better understood with the help of Fig. 568. The normal-running position is given at Fig. 568 I., the weight W being down and the

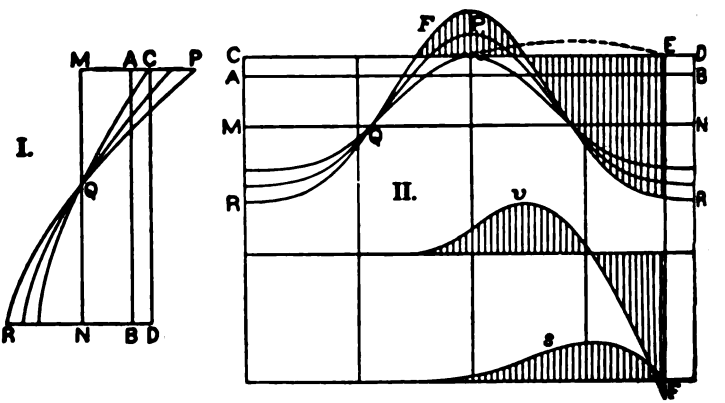

FIG. 567.—Dynamic Action of the Aspinall Governor.

upper pawl P_1 out: then lever L remains down, as in and the valve is open.

Digitized by Google

The governor as a whole has very nearly the same vertical reciprocating motion as the engine-piston (but reduced in magnitude); so that the weight W is subject to an acceleration and an inertia-action just like that of the piston. This is diagrammed in Fig. 567, on the stroke-line at I., on the developed-circle or time base at II.—refer to Figs. 125, 129, 169. The weight W is held down by its own gravity-force, laid off as AM, and by the spring-force CA, exerted by the spring S_1. Then only when the inertia-curve rises above the line CD is there an unbalanced upward force to lift W from the bottom stop.

The curves of velocity v and displacement s (of W with respect to the body of the governor) are derived from the force-curve by the methods used in Fig. 141, which are essentially the same as in the determinations of governor-adjustment in this chapter. Intended only for illustration, these curves are drawn without taking account of the increase of spring-force at S_1, due to the lifting of W, and shown by the dotted curve above CD in Fig. 567 II.

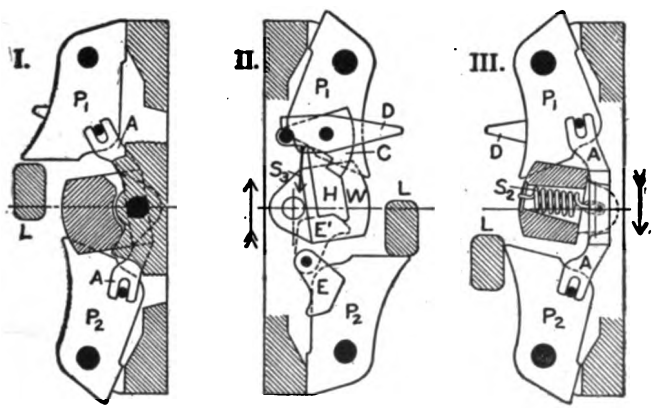

Fig. 568.—Operation of the Governor.

With or without these curves of dynamic action, it is easy to see that there will be a limiting speed up to which W will remain down, as in Fig. 568 I. If the speed rises above this limit, W will lift a little, then come down on its stop with a knock. As the

Digitized by Google

speed increases, so will the amplitude of the movement, until W rises far enough for the catch C to engage the shoulder on the head H and hold the weight up as at II. This throws out the bottom pawl P_2, which raises L: but Fig. 567 makes it evident that W will be caught before the main lever gets to its lowest position, so that P_1 will have to slide past the valve-lever L. As shown at III., the arm-piece A, through which W controls P_1 and P_2, is not fast to W, but is held by a spring, being kept in place also by two lugs—the action of this flexible connection being made evident.

The weight W having been left behind and caught during a down-stroke, the lever L is raised during the next up-stroke of the piston; but as the governor descends, the detent D is pushed up, releasing H from C, and letting W drop; then at the beginning of the next down-stroke, P_1 will catch L and push it down. In ordinary working, therefore, this governor will shut off steam from the engine for one revolution, or two strokes, at a time. In a multiple-expansion engine, however, the action does not cause the same wide fluctuation in power-development that would be produced in a simple engine.

The emergency-stop device consists of a little weight marked E, which is normally held down by the round-end pins at K, one pushed out by a light spring at S_4. If the engine runs away, this weight will be flung up from the full-line position E to E′ (on Fig. 568 II.), propping up H, and staying there till it is released by hand.

During the few revolutions that the engine will now make after steam is shut off, the detent-arm D will have to slip past L, both up and down; which is the reason why D is pivoted on C instead of being fast to it. Note that the spring S_3 is so placed as to resist displacement of D in either direction.

Digitized by Google

APPENDIX TO CHAPTER X.

THE MOMENT OF CENTRIFUGAL FORCE.

The general case of a body rotating as in the fly-ball governor is set forth in Fig. 569, where OY is the axis of rotation and the body AB is capable of turning, in the plane of the drawing, about

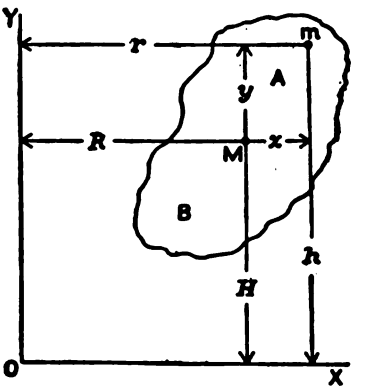

FIG. 569.—Moment of the Centrifugal force.

some point on the line OX. The co-ordinates R and H are respectively the rotation-radius and the moment-arm of the whole mass, at the center M. The centrifugal force of any particle m at radius r is

$$f = m\theta^2 r;$$

and its moment about any point on OX is

$$t = m\theta^2 rh.$$

Taking $\theta = 1$ for simplicity, we have that the whole body, of the mass $M = \Sigma m$, is subject to the moment

$$T = \Sigma t = \Sigma mrh.$$

From the figure

$$r = R + x, \qquad h = H + y;$$

Digitized by Google

therefore

$$t = m(R+x)(H+y);$$
$$T = \Sigma mRH + \Sigma mxH + \Sigma myR + \Sigma mxy$$
$$= MRH + \Sigma mxy; \quad \ldots\ldots\ldots \quad (365)$$

the summations Σmx and Σmy both coming to zero because the origin of x and y is at the center of mass.

For the expression Σmxy the title "double moment" seems to be fitting; and its determination is a problem of the same order as the finding of "moment of inertia", Σmy^2 or Σmr^2. The simplest cases are, First, any body symmetrical with reference to the two co-ordinate axes, for which Σmxy is zero; Second, the straight slender bar, with its center-line passing through a center of turning on the rotation-axis, like the arm 2 in Fig. 537, for which $x = ay$ or $\Sigma mxy = a \times \Sigma my^2$.

General graphical methods, based on the fact that the locus of a particle having the constant centrifugal moment mrh is an

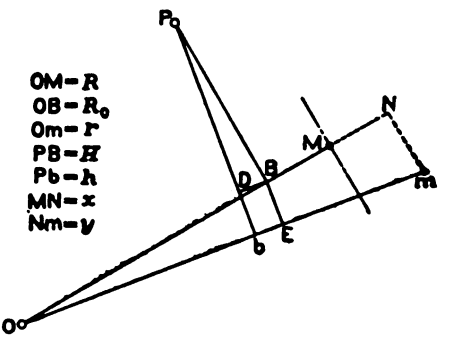

FIG. 570.—Moment of Centrifugal Force in the Shaft-governor.

equilateral hyperbola referred to OX and OY on Fig. 569, can easily be developed; but lack of space and the small importance of the subject forbid their presentation here. When the ball-weight is very large in comparison with the arm that carries it, as in Fig. 537, the error due to finding the centrifugal moment as if for the real center of mass is insignificant; but with the weight-arm belonging to the high-speed governor in Fig. 489, where the ball

Digitized by Google

is relatively small, the true moment was found to be about 33 per cent. greater than that got by concentrating the mass at the center of gravity. It appears, then, that in some cases neglect of this effect would introduce a considerable element of uncertainty into the design of the governor.

It is of interest to prove that in the shaft-governor no such secondary effect exists as that which has just been discussed. In Fig. 570, O is the center of rotation and P the pivot-point for an arm whose center of mass is at M. For a particle at m the moment about P due to centrifugal force is

$$t = m\theta^2 rh.$$

The useful geometrical relation is

$$h = \mathrm{PD} + \mathrm{Db} = H\frac{R+x}{r} + R_0\frac{y}{r},$$

determined by the similarity of the triangles OmN, PBD, and OBE, right-angled at N, D, and E respectively. Then, for $\theta = 1$,

$$t = mrh = m[H(R+x) + R_0 y];$$

by summation this gives

$$\begin{aligned} T &= \Sigma t = MRH + \Sigma mxH + \Sigma myR_0 \\ &= MRH. \quad \ldots\ldots\ldots\ldots \quad (366) \end{aligned}$$

Digitized by Google

CHAPTER XI.

STEAM-ACTION IN THE MULTIPLE-EXPANSION ENGINE.

§ 66. Simplest Conditions: the Receiver-pressure Constant.

(*a*) General Conditions.—The principles fundamental to this discussion of steam-action are developed in §§ 15, 17, 18, and 19; general ideas about compound engines are briefly set forth in § 22 (*b*) and (*c*); and we are now to work up what is rather the synthetical side of the matter for which methods of analysis are given in § 23. At first considering the subject in its simplest possible form, we shall neglect all secondary influences, and get the major effects alone by making the conditions of working the same as those which determine the simple ideal diagram of Figs. 26 and 29. These conditions are:

1. There are no losses of pressure on account of steam-passages or valve-action, so that the diagrams have sharp corners at cut-off, release, etc.

2. All operations of expansion and compression, as also the mixing of different bodies of steam, take place under the law $pv = C$.

3. Only the action of the working steam is to be taken into account. This requires the assumption that the cylinders have no clearance-volumes, and that the receiver is so large that no sensible fluctuation in pressure will be caused by the alternating inflow and outflow of steam.

The whole discussion to follow will be based chiefly upon the two-stage or "compound" engine: methods and relations developed for this type can easily be extended to cover the more complicated arrangements.

Digitized by Google

As to the general manner of treatment, it must be understood that the mathematical method has a very limited field of usefulness in connection with this subject, serving effectively only for the deduction of a few fundamental relations between the principal quantities involved in the working in the engine. On the least departure from the primary, ideal case just outlined, the graphical method becomes the only one that is practically useful. And back of any discussion along the lines of simple theory lie a number of secondary actions, whose effect and magnitude can be found or estimated only by experience—that is, by the study of indicator diagrams from actual engines.

(*b*) THE ENGINE WITH INFINITE RECEIVER.—This heading expresses with mathematical exactness the idea of receiver-effect just set forth under condition 3. Practically, it means that the pressure in the receiver, which determines the common line of exhaust from the high-pressure cylinder and of admission to the low-pressure, is to remain constant so long as the total rate of flow through the engine is constant. Then the ideal diagrams (which more or less closely circumscribe those actually drawn by the indicator) take the form shown in Figs. 574 and 575, where ABCHJ and JDEFG coincide along the horizontal line JH. In both these figures the heavy-line diagrams marked by the subscript 2 are supposed to correspond with the best working of the engine, at its proper, rated load.

Under the assumption that $pv = C$, and since the same quantity of steam passes through both cylinders, we have that the individual expansion-curves BC and DE must be parts of one continuous equilateral hyperbola, with its origin at M. Usually, however, the total expansion is broken, by the drop from C to H, with a loss from the disposable work of an amount represented by the area CHD. This receiver-drop is analogous to that at the final release; and the argument against complete expansion, given in § 17 (*d*), applies with equal force to the high-pressure cylinder. But while, for the best results in the mechanical sense, CH ought not to be less than the reduced mean friction of the high-pressure engine, an exaggerated drop may cause a great loss in efficiency—as is exemplified by the diagrams marked 3 and 4 on Fig. 574.

Digitized by Google

On the other hand, note how, with the earliest cut-off at B_1, the expansion-curve B_1C_1 drops below the exhaust-line J_1H_1, forming

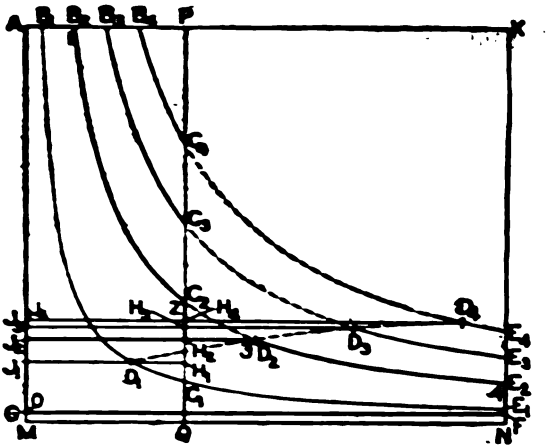

FIG. 574.—Diagrams Showing Equal Division of Work, with variation in the cut-off in both cylinders.

the negative-work loop $D_1C_1H_1$, just as in a simple engine under similar conditions, and with a corresponding loss in efficiency.

(c) DIVISION OF WORK BETWEEN THE CYLINDERS.—The quantity of steam admitted to the engine having been fixed by the H.P. cut-off, the receiver-pressure and the division of work between the cylinders are determined by the L.P. cut-off. To increase the proportion of work done in the L.P. cylinder, its cut-off must be made earlier, and vice versa, as can easily be seen from the diagrams. That is, variation in a cut-off which thus determines admission-pressure (in the L.P. cylinder) has just the opposite effect to variation in a cut-off which determines quantity of steam admitted.

A requirement very often imposed upon a compound engine is, that the total work done shall be equally divided between the two cylinders. This requirement is met in every one of the four cases shown on Fig. 574, each area ABCHJ being made equal to the corresponding JDEFG (coinciding subscripts understood). It

Digitized by Google

is interesting to note how, under this condition, the L.P. cut-off varies with the H.P. Here D has a somewhat wider range over the stroke-line MN than has B on AP, and D is always later than B. It is evident that the exact relation between these two cut-offs must be largely dependent upon the cylinder-ratio.

Fig. 574, with coincident change in both cut-offs, stands for one type of relative valve-action; the other type is illustrated by Fig. 575, where the L.P. cut-off is kept constant. With equal

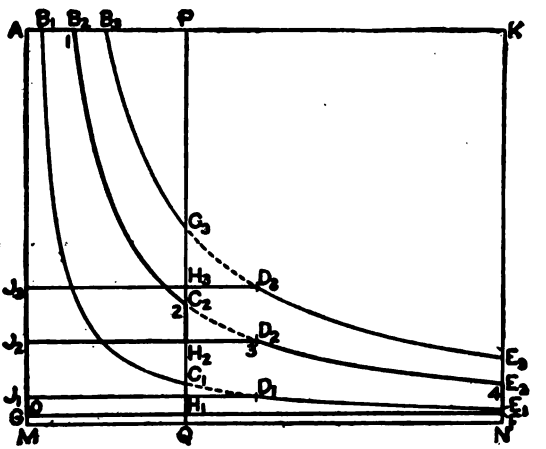

FIG. 575.—Constant Cut-off in the Low-pressure Cylinder.

division for the middle curve, it is made apparent that the H.P. cylinder takes the larger share of a smaller load, the smaller share of an increased load. Over against this variation in division is the advantage that the receiver-drop loss does not rapidly increase with the load as it does in Fig. 574.

(*d*) THE CASE OF COMPLETE EXPANSION.—The simplest relations as to work-division exist under the conditions represented by Fig. 576 I. There is complete expansion in each cylinder, including the last, and (for a three-stage engine) the total area ABCD is divided into three equal parts by the horizontal lines EF and GH. Following § 17 (*e*) and using the subscripts 1, 2, 3, and 4 to designate pressures and volumes at the four

Digitized by Google

critical points B, E, G, and C, we have

$$\text{Area ABEF or } A_1 = p_1 v_1 \left(1 + \log_e \frac{v_2}{v_1}\right) - p_2 v_2$$

$$= pv \log_e r_1, \quad \ldots \ldots \quad (371)$$

letting pv stand as a general value for the curve BC. Similarly,

$$\text{FEGH} = A_2 = pv \log_e r_2; \qquad \text{HGCD} = A_3 = pv \log_e r_3$$

For equal partial areas A_1, A_2, and A_3, the individual expansion-ratios must be equal, or

$$\frac{v_2}{v_1} = \frac{v_3}{v_2} = \frac{v_4}{v_3} = r;$$

further, the total ratio R or v_4/v_1 will evidently be the product of r_1, r_2, and r_3: wherefore, in this case, $R = r^3$; or in general for n stages,

$$R = r^n. \quad \ldots \ldots \quad (372)$$

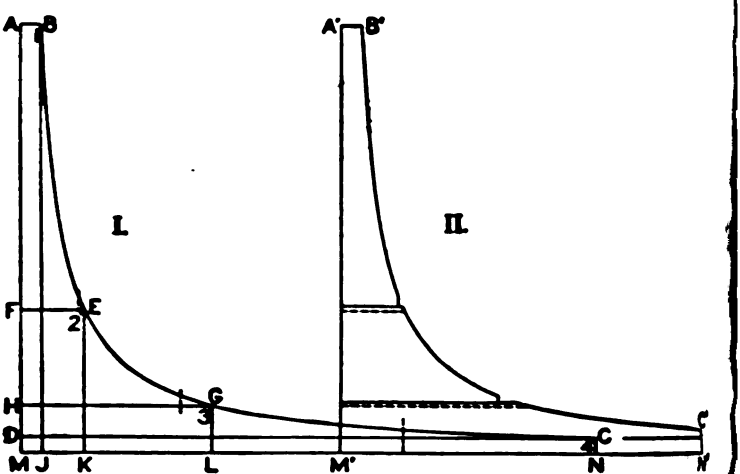

FIG. 576.—Complete Expansion and the Introduction of Terminal Drop.

With complete expansion therefore, or under the condition that the total volume of each cylinder is equal to the cut-off volume of the next lower cylinder, [illegible] of expansion in each cylinder,

Digitized by Google

here identical also with the ratio of successive cylinders, will be the nth root of the total ratio of expansion. In Fig. 576, for instance, the value of r is 3, and that of R or DC/AB is 27.

The first modification from this wholly ideal case is shown at II. in Fig. 576. The expansions are cut short at the volumes indicated by dotted lines on I.; and to equalize areas the cut-offs are moved up a little in stages 2 and 3, raising the receiver-pressures above the original levels, which are dotted in on II. Usually, the amount cut from the last stage is relatively much greater than from the earlier stages.

(*e*) MATHEMATICAL RELATIONS for the compound engine, as represented by Figs. 574 and 575, will now be deduced—using the subscripts as indicated on the figures, with 0 for the exhaust-pressure. The fundamental equation, embodying the assumption that the condition $pv=C$ is maintained throughout the operation, is

$$p_1v_1=p_2v_2=p_3v_3=p_4v_4. \quad . \quad . \quad . \quad . \quad . \quad . \quad (373)$$

For the areas we have

$$\text{ABCHJ}=A_1=pv\left(1+\log_e\frac{v_2}{v_1}\right)-p_3v_2; \quad . \quad . \quad . \quad (374)$$

$$\text{JDEFG}=A_2=pv\left(1+\log_e\frac{v_4}{v_3}\right)-p_0v_4. \quad . \quad . \quad . \quad (375)$$

Equating and dividing by pv, using the particular values in (373) as convenient, we get

$$\log_e\frac{v_2}{v_1}-\frac{v_2}{v_3}=\log_e\frac{v_4}{v_3}-\frac{p_0}{p_4}. \quad . \quad . \quad . \quad . \quad . \quad (376)$$

If there is to be no receiver-drop, or if $v_3=v_2$, and if further we let $v_1=Ev_4$, this becomes

$$\log_e\frac{v_2}{Ev_4}-\log_e\frac{v_4}{v_2}=1-\frac{p_0}{p_4},$$

or

$$\log_e\frac{1}{E}\left(\frac{v_2}{v_4}\right)^2=1-\frac{p_0}{p_4};$$

Digitized by Google

whence

$$\frac{v_2}{v_4}=\sqrt{E}\sqrt{\text{anti-log}\left(1-\frac{p_0}{p_4}\right)}=C\sqrt{E}. \quad . \quad . \quad . \quad (377)$$

This E is the reciprocal of R above; the cylinder-ratio v_4/v_2 is no longer the square root of R, but it is proportional to that root according to a factor which depends upon the ratio of final pressure-drop, p_0/p_4.

If instead of making $v_3=v_2$, we allow a certain proportion of receiver-drop by letting $v_3=nv_2$ (which makes $p_2=np_3$, n being greater than one), the formula becomes

$$\log_e \frac{n}{E}\left(\frac{v_2}{v_4}\right)^2=\frac{1}{n}-\frac{p_0}{p_4},$$

$$\frac{v_2}{v_4}=\sqrt{\frac{E}{n}}\sqrt{\text{anti-log}\left(\frac{1}{n}-\frac{p_0}{p_1}\right)}. \quad . \quad . \quad . \quad . \quad (378)$$

EXAMPLE 1. Let $p_1=100$ lbs. and $p_0=2.5$ lbs.; take v_4 to be 1.00; for $p_4=10$ lbs. or $v_1=0.1$ and $n=1.25$, find v_2, or the size of the H.P. cylinder for equal work-division.

Here

$$\frac{1}{n}-\frac{p_0}{p_4}=0.80-0.25=0.55.$$

To get the common log, divide by 2.3026, which gives

$$0.55\div 2.3026=0.23886.$$

Then, with $E=0.1$,

$$\frac{v_2}{v_4}=\sqrt{\frac{0.1}{1.25}}\sqrt{1.733}=\sqrt{0.1386}=0.3723;$$

and $v_3=1.25\ v_2=0.4654$.

Without receiver-drop, or with $v_2=v_3$, we should get from (377),

$$\frac{v_2}{v_4}=\sqrt{0.1\times 2.117}=0.4592.$$

In Figs. 574 and 575 the overall proportions are the same as in the above example, and the cylinder is $v_3/v_2=$

Digitized by Google

For Case 2 this makes the drop about 31 per cent. (of p_2), or gives n the value $1/0.69 = 1.45$, and fixes v_2/v_4 at 0.48 for equal work-division. Comparing this 0.48 with the values 0.465 and 0.459 above, we see the important fact—evident also from a mere inspection of the diagrams—that for a given admission-volume v_1 in the first cylinder, there can be quite a wide variation in the cylinder-volume v_2 with only a small effect upon either the total work or the L.P. cut-off v_3 which will keep the division equal. Until the receiver-drop becomes quite large, it is the only element that is much affected by thus varying v_2.

We have therefore the important practical conclusion (from the whole discussion up to this point), that the principal element in determining work-division is the receiver-pressure. As the first step in the layout of preliminary diagrams for a proposed engine which is to have reasonably full expansion in the upper stage or stages, this pressure (or the corresponding volume) can be closely enough calculated by the method of Eq. (377): then the succeeding steps, in the direction of closer approximation of the diagram toward the actual form, are matters for graphical rather than mathematical determination.

As an instance of the limited utility of the mathematical method, we may consider the problem involved in drawing Fig. 574, where, with an assumed cylinder-ratio, the two areas are to be made equal. To find v_3, we should put Eq. (376) into the form

$$\log_e \frac{v_4}{v_3} + \frac{v_3}{v_3} = \log_e \frac{v_2}{v_1} + \frac{p_0}{p_4}, \quad . \quad . \quad . \quad . \quad . \quad (379)$$

collecting the known terms into the right-hand member: With v_3 thus involved, the equation can be solved only by a trial method, which is at least as much trouble as to find the exact location of the division-line JD by means of successive measurements with the planimeter.

(*f*) THE GENERAL CASE OF WORK-DIVISION.—One more mathematical deduction finds place properly at this point, to cover the case presented by Fig. 577. Here the area A_1 is not equal to A_2, but bears to it the definite relation expressed by the factor q in

Digitized by Google

the equation

$$p_1 v_1\left(1+\log_e \frac{v_2}{v_1}\right)-p_2 v_2=q\left[p_3 v_3\left(1+\log_e \frac{v_4}{v_3}\right)-p_4 v_4\right]. \quad (380)$$

Very often the average value of the steam-measure pv is not the same in the lower stage as in the higher—in an unjacketed engine it is usually less, because of increased cylinder-condensation. To represent such a condition we change Eq. (373) to

$$p_1 v_1 = p_2 v_2 = m p_3 v_3 = m p_4 v_4 \quad . \quad . \quad . \quad . \quad . \quad (381)$$

Now defining the receiver-drop as for Eq. (378) by the relation

$$p_2 = n p_3, \quad \text{whence} \quad v_3 = \frac{n}{m} v_2,$$

and again letting $v_1 = E v_4$, we get from (380), through division by $p_3 v_3$, $p_4 v_4$, or $p_1 v_1$, m, the equation

$$m\left(1+\log_e \frac{1}{E}\frac{v_2}{v_4}\right)-\frac{v_2}{v_3}=q\left(1+\log_e \frac{m}{n}\frac{v_4}{v_2}-\frac{p_0}{p_4}\right).$$

This transforms to

$$m+\log_e\left(\frac{1}{E}\right)^m\left(\frac{v_2}{v_4}\right)^m-\frac{m}{n}=q+\log_e\left(\frac{m}{n}\right)^q\left(\frac{v_4}{v_2}\right)^q-q\frac{p_0}{p_4},$$

or

$$\log_e\left(\frac{1}{E}\right)^m\left(\frac{n}{m}\right)^q\left(\frac{v_2}{v_4}\right)^{m+q}=q-m+\frac{m}{n}-q\frac{p_0}{p_4}. \quad . \quad . \quad (382)$$

EXAMPLE 2. In Fig. 577, $A_1 = 40$ per cent., $A_2 = 60$ per cent., of the total effective area, or $q = \frac{2}{3}$; the receiver-drop is one-sixth, or $n = \frac{5}{6}$; of the product pv, 10 per cent. is lost in passing to the lower stage, or $m = \frac{9}{10}$; the ratio of initial cut-off is $E = \frac{1}{16}$; and the final pressures are $p_4 = 8$ lbs., $p_0 = 2$ lbs., which makes the initial pressure $8 \times 16 \times \frac{10}{9} = 142.2$ lbs.

Digitized by Google

Using Eq. (382) with these data, we get

$$\log_e 16^{\frac{1}{9}} 1.08^{\frac{3}{9}} \left(\frac{v_2}{v_4}\right)^{\frac{1}{9}} = -0.6667 - 1.1111 + 0.9259 - 0.1667$$

$$= -0.3148.$$

$$\frac{v_2}{v_4} = \left(\frac{1.3700}{21.77 \times 1.0524}\right)^{\frac{9}{10}} = 0.2050.$$

Fig. 577 is laid off with this ratio of AP to AK, and the measured areas check up to the assumed value of q. For a purely graphical determin-

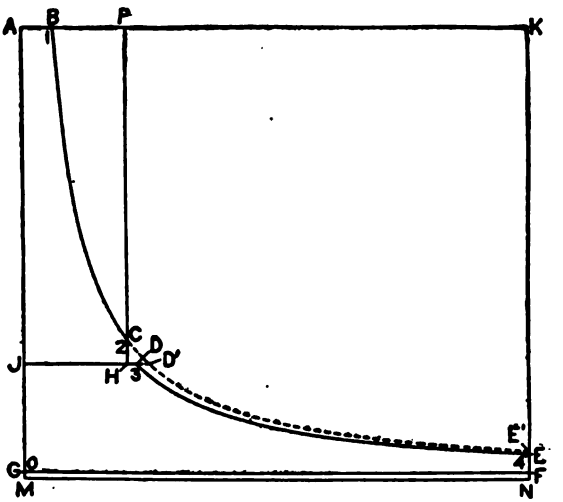

FIG. 577.—A General Problem in Work-division.

ation, we should have to note that as CH moves sidewise, H will travel along a hyperbola below BC, located by the ratio n: then it would be easy to draw coincident CH and JD lines and measure areas, until the desired proportion was secured.

As to the division of work in the above example, it is such as might be desired in a three-cylinder compound engine—giving the H.P. cylinder 40 per cent. and each of the L.P.'s 30 per cent. of the total work. and the whole method would apply equally to

Digitized by Google

the problem of dividing up the total expansion in a three- or four-stage engine.

(*g*) GENERAL CONCLUSIONS.—Some of the following statements are repetitions, all of them are quite evident conclusions from the diagrams and formulas that have been presented—chiefly from the diagrams.

A. The fundamental data for any steam-operation, the leading dimensions of the cycle as a whole, are

p_1 = admission-pressure;
p_4 = pressure at end of expansion;
p_0 = exhaust-pressure;
v_4/v_1 = total ratio of expansion.

To find whether $p_4v_4 = p_1v_1$, or, more generally, how the steam-measure pv in the L.P. cylinder compares with the pv in the H.P. cylinder, is one of the principal objects in combining actual indicator diagrams—as pointed out in § 23.

B. In a compound engine with a given cylinder-ratio, the variable elements of the cycle are

1. The load on the engine;
2. The total ratio of expansion, as fixed by the H.P. cut-off;
3. The L.P. cut-off;
4. The exhaust-pressure.

C. With the load constant, the work done in the H.P. cylinder is increased

By making the L.P. cut-off later;

By raising the boiler-pressure: this slowly decreases pv or the amount of steam admitted to perform a given total amount of work per revolution; but it adds to the H.P. diagram, by raising the admission-line and lowering the exhaust-line, more rapidly than it subtracts by drawing inward the expansion-curve:

By raising the exhaust-pressure: this subtracts more from the bottom of the L.P. diagram than is added on account of the increase in pv and the corresponding rise in the receiver-pressure.

D. In a given engine, the preservation of an equal division of load requires that the L.P. cut-off shall vary with the H.P., and in the same direction. If the H.P. cut-off is left constant,

Digitized by Google

increasing the load increases the share taken by the L.P. cylinder.

E. In proportioning an engine, with a view to a certain division of power and a reasonable relative amount of loss by receiver-drop,

The H.P. cylinder must be relatively smaller as the total ratio of expansion is greater:

With a fixed L.P. cut-off and with a constant amount of steam admitted to the H.P. cylinder per revolution, the volume of the H.P. cylinder can be varied over quite a range with comparatively little effect upon the division of work, but with a great influence upon the receiver-drop—compare (*e*), under Example 1:

If the L.P. cut-off is varied in a proper * relation to the size of the H.P. cylinder, making the latter larger gives it a larger share in the power developed.

§ 67. The Direct-expansion Engine.

(*a*) THE ENGINE WITH NO RECEIVER.—In approaching the actual engine, from the ideal case just discussed, we begin with the type farthest from the engine with "infinite" receiver, and take up first that which has no receiver at all—for one strong reason, because the relations as to volumes are so much simpler when the strokes are simultaneous, and this is the simplest case under that type of arrangement. Still assuming that the clearance-volume is zero and the valve-action ideal, we get the operation represented in Fig. 578. When the high-pressure expansion ends, at C, communication is opened to the large cylinder; and during the whole of the return stroke the intermediate valve must be kept open—see the arrangement in Fig. 269. Since the L.P. piston is so much the larger, there is expansion, from v_2 at the beginning to v_4 at the end of this return stroke, with a drop in pressure shown, for the H.P. cylinder, by the curve CE′. The total volume increases just as if a single piston of the area $(A_2 - A_1)$ started from a position where the volume back of it was v_2 and travelled through a distance equal to the stroke of the engine—this being the result-

* That is, so as to keep the proportion of receiver-drop about constant.

Digitized by Google

ant of a loss due to the return of the H.P. piston of area A_1 and a gain due to the advance of the L.P. piston A_2.

There are several ways of representing the steam-action in the low-pressure cylinder. Laid off on the same stroke-line, the L.P. diagram will fit under the H.P. diagram in the form CE'GS—as it would be drawn, for instance, if the same indicator were connected

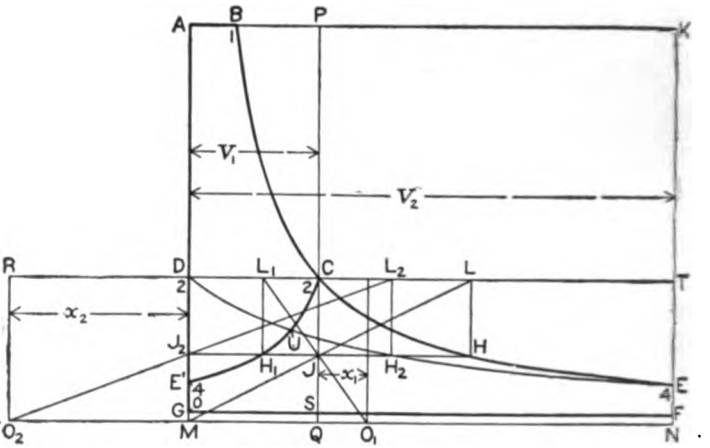

FIG. 578.—The Engine with No Receiver.

to both cylinders by suitable piping, and both diagrams were taken with the same spring and on the same paper. Brought to a common scale of volume, so as to represent work in the proper relative proportion, this diagram becomes DEFG, with the overlap DE'U just equal to the apparent deficiency CEU. To show clearly the continuity of the expansion, it is best to change DEFG to the equivalent form E'CEFG: then the curve CE' divides the whole area into respective parts, as does the horizontal line of receiver-pressure in the preceding figures. At any pressure QJ, the total steam-volume is J_2H; and if J_2H_1 is the volume in the small cylinder, then that in the large cylinder, or J_2H_2, must be the same as H_1H.

Since change of volume during the intermediate expansion is proportional to the travel of either piston, the curves CE' and DE are simple hyperbolas, which could be drawn with reference to a fixed

Digitized by Google

origin, in the usual manner. To find the origins, we note that either base-line, QM or MN, now represents a volume-change of the amount $(V_2 - V_1)$: then for O_1 we make

$$QO_1 = x_1 = QM\frac{V_1}{V_2 - V_1}, \quad \ldots\ldots \quad (383)$$

and for O_2

$$MO_2 = x_2 = MN\frac{V_1}{V_2 - V_1}. \quad \ldots\ldots \quad (384)$$

(*b*) MATHEMATICAL RELATIONS.—The division of area between the two partial diagrams can be most easily calculated as follows:

For the whole figure ABCEFG, the mean effective pressure is

$$P_1 = \frac{p_1 v_1\left(1 + \log_e \frac{v_4}{v_1}\right)}{v_4} - p_0. \quad \ldots\ldots \quad (385)$$

And for the low-pressure diagram DEFG, on the base MN, the M.E.P. is the same as that of the figure CEFS on the base QN, or is

$$P_2 = \frac{p_2 v_2 \log_e \frac{v_4}{v_2}}{v_4 - v_2} - p_0. \quad \ldots\ldots \quad (386)$$

For equal work-division, $2P_2 = P_1$, or

$$2p_4\frac{v_4}{v_4 - v_2}\log_e\frac{v_4}{v_2} - 2p_0 = p_4\left(1 + \log_e\frac{v_4}{v_1}\right) - p_0;$$

whence

$$\frac{v_4}{v_4 - v_2}\log_e\frac{v_4}{v_2} = \frac{1}{2}\left(1 + \log_e\frac{v_4}{v_1} + \frac{p_0}{p_4}\right). \quad \ldots\ldots \quad (387)$$

EXAMPLE 1. In Fig. 578, $v_4 = 1.00$, $v_1 = 0.10$, $p_4 = 10$, $p_0 = 2.5$. To find v_2 we have

$$\frac{v_4}{v_4 - v_2}\log_e\frac{v_4}{v_2} = \frac{1 + 2.3026 + 0.25}{2} = 1.7763.$$

For $v_2 = 0.3$, $1/0.7 \times \log 3.333 = 1.429 \times 1.2040 = 1.720$;
For $v_2 = 0.25$, $1/0.75 \times \log 4.000 = 1.333 \times 1.3863 = 1.848$;
For $v_2 = 0.28$, $1/0.72 \times \log 3.571 = 1.389 \times 1.2729 = 1.768$;
For $v_2 = 0.275$, $1/0.725 \times \log 3.636 = 1.379 \times 1.2909 = 1.780$.

Digitized by Google

Evidently, 0.27 would be the correct result, with sufficient accuracy. Graphically, it would be a simple matter to draw CQ in successive positions until the mean height of CEFS was found by measurement to equal half the mean height of ABEFG.

7. IDEAL ACTION WITH RECEIVER.—This type of engine properly the next in order, is illustrated in Fig. 579, where, with assumed proportions, three different initial cut-offs are investigated. In discussing this or any similar case, we use the general symbols p and v with subscripts referring to the several numbered points; for the fixed volumes we use capital letters, with subscripts to designate quantities belonging to the respective cylinders. Thus

V_1 = volume of high-pressure cylinder;
V_2 = volume of low-pressure cylinder;
R = volume of receiver.

For the important ratios the symbols are

$\epsilon_1 = r_1$, r_2 = H.P. cut-off;
$\epsilon_2 = r_{2'}$, r_2 = L.P. cut-off;
$E = r_1\ r_2$ = total ratio of cut-off;
$n = V_1\ V_2$ = cylinder-ratio;
$a = R\ V_1$ = receiver-ratio.

Now in the action represented by Fig. 579, we see that when the steam from cylinder 1 exhausts into the receiver, at point 2 it meets and mixes with a body of steam of the pressure p_3: from the resulting pressure p_3 begins a common expansion 34 (marked 3'4' on the H.P. diagram, 3''4'' on the L.P.), which continues to the cut-off at 4: here the whole body of steam is divided into two parts, and then the working-steam expands alone from 4'' to 7, the receiver-steam is compressed by the small piston from 4' to 3. We wish to be able to determine the pressure and volume at each of the important, numbered points, and to draw all the intermediate curves.

First, write expressions for all the volumes in terms of p_1

Digitized by Google

quantities; in any actual case, it is well to reduce all the volumes to numerical values, in terms of either V_1 or V_2, as a base-unit.

$$v_1 = e_1 V_1 = E V_2; \qquad v_2 = V_1;$$
$$v_3 = V_1 + R; \qquad v_5 = R; \qquad v_7 = V_2;$$
$$v_4 = [(1-e_2)V_1 + R] + e_2 V_2 = v_{4'} + v_{4''}.$$

If necessary, make a sketch diagram of the cylinders with the pistons in positions 3, 4, and 5, to see that these expressions are

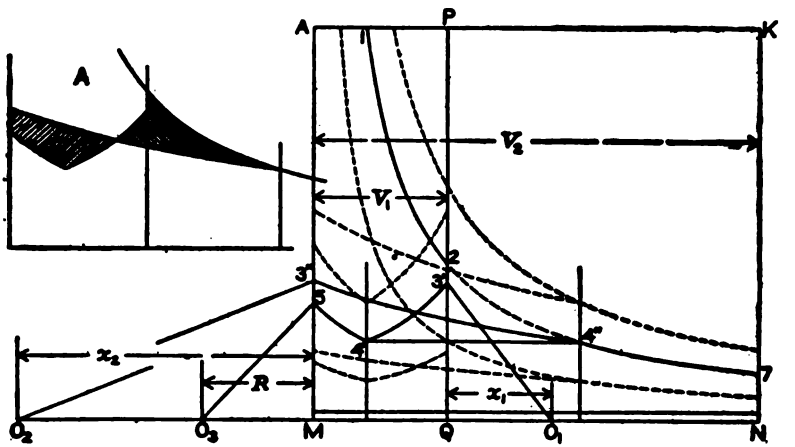

FIG. 579.—Direct-expansion Engine with a Receiver.

correct. At 4 (low-pressure cut-off) the total volume v_4 is divided into two parts: $v_{4''}$, all in the L.P. cylinder, contains the working-steam; $v_{4'}$, in receiver and H.P. cylinder, contains the receiver-steam.

As in the preceding discussions, the fundamental relation is

$$p_1 v_1 = p_2 v_2 = p_4 v_4 = p_7 v_7. \quad . \quad . \quad . \quad . \quad . \quad (388)$$

This determines the pressure p_4; and with that known, we easily calculate p_3 and p_5 from the equations $p_3 v_3 = p_4 v_4$ (for the combined bodies of steam) and $p_5 v_5 = p_{4'} v_{4'}$ (for the receiver-steam alone). Incidentally, p_3 could be found, after p_5 was known, by the relation

$$p_3 v_3 = p_2 v_2 + p_5 v_5, \quad . \quad . \quad . \quad . \quad . \quad . \quad (389)$$

Digitized by Google

although it is not here necessary to make the determination through this operation of mixing.

EXAMPLE 2.—In Fig. 579, taking V_2 as unity, $V_1 = 0.30$, $R = 0.25$, and for the full-line diagram, $e_1 = 0.4$, $e_2 = 0.6$. Then if $p_1 = 100$, $p_1 r_1 = 12$; and the several values work out as follows:

$r_1 = 0.12$, $p_1 = 100$; $r_{e'} = 0.60$, $p_4 = 20$;
$r_2 = 0.30$, $p_2 = 40$; $r_e = 1.00$, $p_e = 12$;

$$r_4 = (0.4 \times 0.3 + 0.25) + 0.6 = 0.97; \qquad r_3 = 0.30 + 0.25 = 0.55;$$

$$p_3 = 20 \times 0.97 \div 0.55 = 35.3;$$

$$r_{e'} = 0.37; \qquad r_2 = 0.25;$$

$$p_2 = 20 \times 0.37 \div 0.25 = 29.6.$$

By mixing,

$$p_3 \times 0.55 = 40 \times 0.30 + 29.6 \times 0.25 = 19.4$$

$$p_3 = 35.2.$$

Graphically, we get the point 4″ by locating the L.P. cut-off ordinate on MN according to e_2; then locate the corresponding ordinate on QM and project over the pressure at 4″ to get 4′. Now the curves 4″3″ and 4′3′ can be drawn from fixed poles, as in Fig. 578. Since r_4 is $(1-e_2)V_1 + R + e_2 V_2$, equal to $V_1 + R + e_2(V_2 - V_1)$, and r_3 is $V_1 + R$, and since the full stroke-line MN or QM represents the volume-change $(V_2 - V_2)$, we make

$$\frac{r_1}{QM} = \frac{r_2}{MN} = \frac{V_1 + R}{V_2 - V_1} \quad \ldots \ldots \ldots \quad (390)$$

For the curve 4′5 the pole O is got by laying off the receiver-volume to the regular scale, as indicated on the figure.

(*d*) DIVISION OF WORK.—Even with as little complication as is involved in Fig. 579, it becomes practically impossible to express a general relation between the areas of the diagrams for the respective cylinders. It would be better, perhaps, to say "useless", rather than "impossible", as appears from the following equation of relation for equal areas in a diagram like Fig. 579. The equa-

Digitized by Google

tion, whose derivation would here take up too much space, is

$$\frac{1+n}{1-n}\frac{(1-e_2+a)n+e_2}{e_2}\log_e\frac{(1-e_2+a)n+e_2}{n(1+a)}+n\frac{1-e_2+a}{e_2}\log_e\frac{1-e_2+a}{a}$$

$$-\log_e\frac{n}{E}=1-\log_e\frac{1}{e_2}+\frac{p_0}{Ep_1}. \quad . \quad . \quad . \quad . \quad . \quad . \quad . \quad (389)$$

All the symbols have already been defined in the last article. It would be easier to cut and try and measure areas a good many times, than to attempt to satisfy such an equation.

For this necessary cut-and-try graphical method, the starting point would be furnished by Fig. 578 or Eq. (387)—compare the actual diagrams in Figs. 583, 597, and 598. As the receiver is made larger, however, and with the effect of the valves and steam-passages in retarding fluctuations of pressure, the latter become smaller, and the engine approaches the action belonging to the case discussed in § 66, Fig. 604 being an apt example.

The way to measure the loss by receiver-drop on Fig. 579 is to compare the two areas, of overlap and of deficiency, shaded at A. Since the receiver-volume enters into the common expansion, the L.P. diagram cannot be closely fitted in against the H.P., after the manner of E'CEFG in Fig. 578. With the small drop shown on Fig. 579 the loss of area is insignificant.

(*e*) Theoretical Diagrams for an Actual Engine.—In a real engine, the actions which have just been discussed are further complicated by the cylinder-clearances, with the consequent presence of a body of clearance-steam in each cylinder. To develop a solution of the problem thus presented, we will now analyze an actual design, choosing one in which the secondary effects are large. An excellent example for this purpose is supplied by the locomotive illustrated in Figs. 256 to 258 (compare also Fig. 437); and the proportions used in Fig. 580 are taken from a pamphlet on the steam-distribution in this engine and from other published descriptions.

The cylinders are 15″ and 25″ by 26″; and the several volumes involved, expressed, not in cubic measure, but in terms of either nominal cylinder as unity, are

Digitized by Google

	V_1	C_1	R	V_2	C_2
either	1.00	0.19	0.28	2.78	0.33
or	0.360	0.068	0.101	1.00	0.119

Here V stands for the nominal cylinder, C for the clearance-volume, and R for the receiver—the last being, in this case, merely the cavity in the center of the valve.

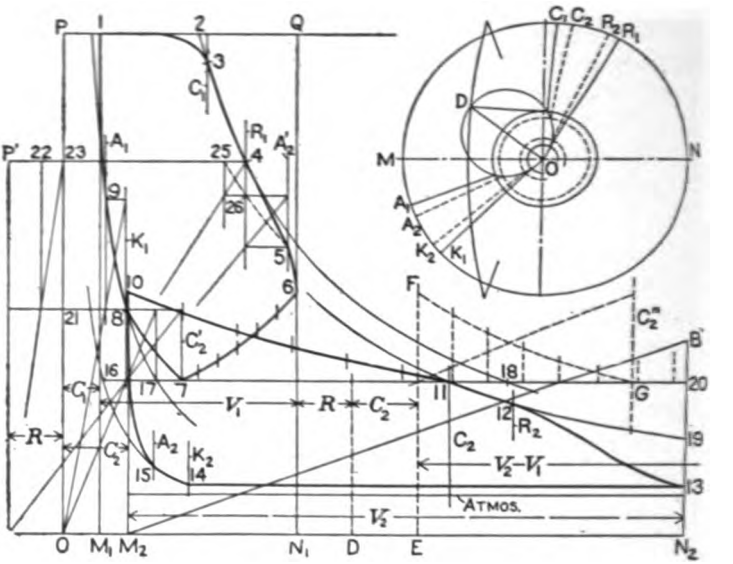

FIG. 580.—Diagrams for a Vauclain Locomotive.

The essential dimensions of the valve-gear are as follows:

Greatest travel of valve, 5½";
Steam-lap: high-pressure port ⅞", low-pressure port ¾";
Lead in full gear, high-pressure cylinder, ⅛";
Mid-gear eccentric-radius (assumed) 1 1/16";
Exhaust-lap: H.P. cylinder ¼" negative,
L.P. cylinder ⅜" negative.

The first step in drawing Fig. 580 is to measure off from the pressure-axis OP the volumes of the clearances and of the cylinders,

Digitized by Google

giving the bases M_1N_1, M_2N_2, and to put in the lines of admission-pressure and of exhaust-pressure. The former is taken at 185 lbs. absolute, which might be realized from a boiler-pressure of 180 lbs. by gage (depending upon speed and opening of throttle-valve); the exhaust is at 18 lbs., a rather low value for a locomotive.

The primary variable is the high-pressure cut-off, here made effective at half-stroke; that is, the ideal expansion-curve starts at 2, half-way from 1 to Q; and then the estimated admission-curve, sketched in, locates the actual, mechanical cut-off at 3. Having extended the expansion hyperbola well down into the low-pressure space, we next draw the valve-diagram that will give the cut-off at 3, and determine all the other events of the valve-action. In this diagram, the letters A, C, R, and K designate admission, cut-off, release, and compression, with sub one for the H.P. and sub two for the L.P. cylinder. Disregarding connecting-rod effect, we transfer these determinations to the respective stroke-lines M_2N_2, M_1N_1, marking the ordinates with the same designating letters. For convenience, the diameter MN is made half of M_2N_2; then any event is located on M_2N_2 by doubling the horizontal distance given by the valve-diagram; and for M_1N_1 we get a simple reduction-diagram by making N_2B equal M_1N_1 and drawing M_2B.

As soon as we reach the H.P. release at R_1 or point 4, we encounter the fact that the steam in the cylinder is now to mix with a body of receiver-steam of unknown pressure, that is, of unknown quantity. To get a known condition, we drop to the exhaust operation, and draw the L.P. compression-hyperbola from the point 14, located by K_2. Now turn back to Fig. 41, and note the fundamental fact that if the measure pv of the working-steam is to be the same in both cylinders, distances between hyperbolas of expansion and of compression, along any pressure-line, must be the same for both diagrams. It is pretty evident that the H.P. clearance-steam is greater in quantity than the L.P., or that the curve 9–17 will be outside (to the right) of 16–14: then the expansion-curve 11–12 must be inside of 4–18. Knowing that L.P. cut-off takes place at the ordinate C_2, we now seek to determine the pressure at this cut-off, or to locate the line 7–11 so that the volumes 17–18 and 16–11 will be equal.

Digitized by Google

To do this, we make a rough guess at the curve 8–17, sketch it in, and by trial locate 11 on C_2 so that 11–18 will equal the assumed 16–17. On the return-stroke of the H.P. piston, the L.P. cut-off takes place at C_2', as marked. After this cut-off, steam is compressed in the H.P. cylinder and the receiver until H.P. valve-closure at K_1. For the curve of this operation the pole is evidently O'. By a single construction we get the height of the point 8 and then by another construction with O as pole produce the H.P. compression-curve down to 17. If this determined 16–17 does not agree with 11–18, we try again, until these two lengths come out equal.

Having now the pressure of the receiver-steam at an instant when it is definitely shut off by itself, we know its quantity, and can mix it with the steam released from the H.P. cylinder at 4. One way is to take the measuring rectangle O'–21 (that is, volume R by pressure p_R), and change it to O'–22 at pressure p_r. Just after the valve opens at 4, the volumes in communication aggregate the amount P'–4; but at the pressure p_4 the steam would fail to fill this space by the amount 22–23. Transferring this deficiency to 25–4, and drawing the hyperbola 25–26–5, with O' as pole, we get two results: first, that if the valve opened instantaneously and widely, the resultant pressure of the mixture would be p_{26}: second, that this mixture would expand along 26–5 to the instant of L.P. admission at ordinate A_2'. Actually, the steam in the H.P. cylinder will follow some such curve as 45, which can easily be sketched in by eye.

The pressure at 6 or 10, resulting from the mixing of the steam in H.P. cylinder and receiver at 5 with that in the L.P. cylinder at 15, can be most easily found by simply carrying back from 7 or 11 the line of the common expansion. The best way to find points on curves 6–7 and 10–11 is by means of a construction based on the principle of Eq. (393). There we saw that the volume at any instant during this expansion is equivalent to the initial volume at 6 or 10, plus a fraction of the volume-difference $(V_2 - V_1)$ proportional to the piston-travel. Here the initial volume is $C_1 + V_1 + R + C_2$, and from the pole O this total volume locates the ordinate EF. Beyond EF lay off, to the same scale, the volume $(V_2 - V_1)$,

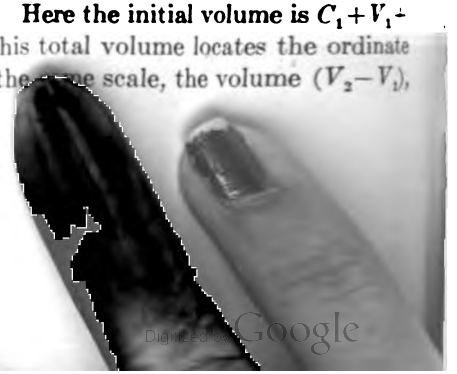

Digitized by Google

and divide it into, say, 10 equal parts, drawing ordinates as indicated; and on this $(V_2 - V_1)$ base locate the L.P. cut-off ordinate C_2''. The point G thus found will correspond with 11 or 7, and the curve GF has O as its pole. Now divide M_2N_2 and N_1M_1 into the same ten equal parts, and project over heights found for FG to the corresponding ordinates, to get 6–7 and 10–11.

The rest of the operation is self-evident. Curves 9–1, 5–6, 15–10, and 12–13 are sketched in so as to look most natural. Measurement shows that the L.P. diagram-area A_2 is about 1.24 times as large as the H.P. area A_1 or 134679; but the further secondary effects not here taken into account—namely, friction of the steam-passages and collapse of the steam in passing to the L.P. cylinder—all tend to reduce the relative value of A_2, and this will probably cause the actual work to be almost equally divided between the pistons.

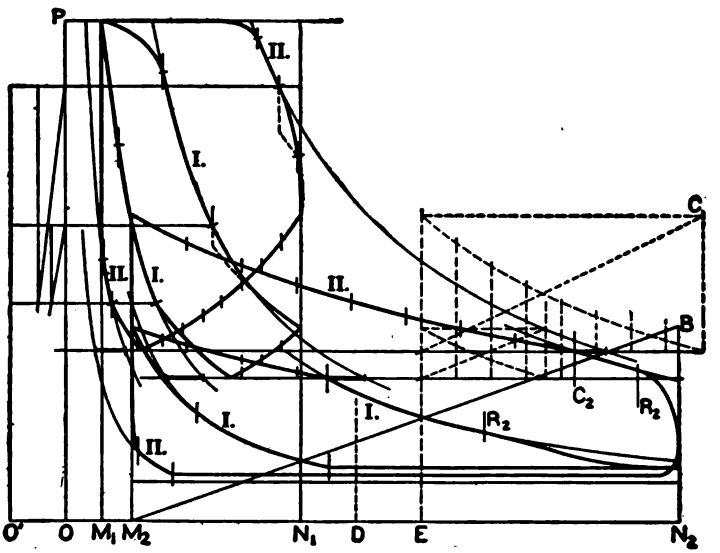

FIG. 581.—Earlier and Later Cut-off, in Engine of Fig. 580.

(*f*) THE EFFECT OF VARIABLE VALVE-ACTION in this locomotive is illustrated in Fig. 581, where diagrams are drawn for H.P. effective cut-off at one-quarter and at three-quarters of the stroke,

Digitized by Google

with the steam-distribution determined by Fig. 582. An important point in the design of any variable cut-off compound engine which has both exhaust and admission controlled by the same valve, is to keep the compression from running too high, especially in the H.P. cylinder. Here this end is attained through the use of large clearances and negative exhaust-laps. It appears from Fig. 580 that the resulting early release has no bad effect on the H.P. diagram, but that the exhaust begins much sooner in the L.P. cylinder than is desirable. To show that more lap can be used to advantage, Figs. 581 and 582 are drawn with an exhaust-lap equal to zero, instead of minus $\frac{1}{8}$", on the L.P. valve-face. Even with the earliest cut-off here investigated, it does not appear that either compression is too great. The exhaust-pressure is made higher for the smaller diagram because the speed is supposed to be very much greater.

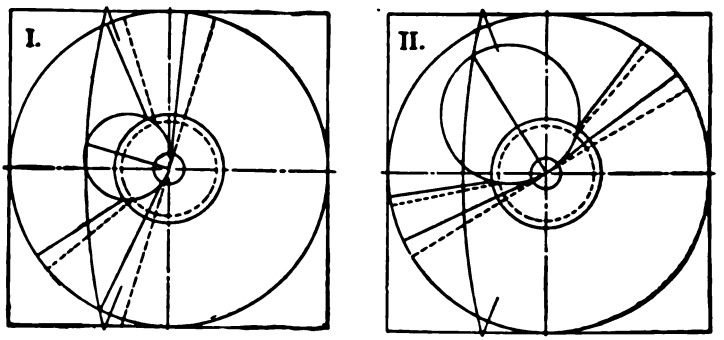

FIG. 582.—Valve-diagrams with Fig. 581; full lines, H.P. cylinder; dotted lines, L.P. cylinder.

The construction of Fig. 581 is the same throughout as that of Fig. 580. Note that in diagram I. the ideal curve of expansion after the mixing at H.P. release rises above the main expansion-hyperbola. The ratio of A_2 to A_1 in this figure is 0.96 to 1.00 for Case I., 1.7 to 1.0 for Case II.

(*g*) INDICATOR DIAGRAMS, original and combined, from a locomotive like that for which Figs. 580 and 581 were drawn, are shown in Fig. 583, with the idea of comparing actual with pre-

Digitized by Google

dicted results. These diagrams are the mean of cards from both ends of the cylinders on one side of the locomotive. The valve-action is practically the same as in Fig. 580 except that there is more exhaust-lap, and the various "events" and curves of the two

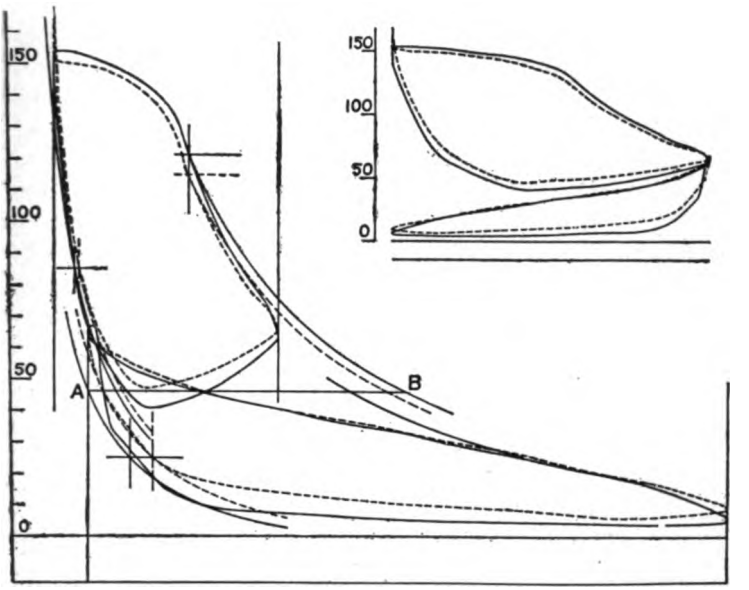

FIG. 583.—Indicator Diagrams from Vauclain Locomotive.

diagrams are essentially the same in timing and character: one point to be noted is the prompt flow from H.P. to L.P. when the latter opens for admission, causing a rapid admission-rise and a small loop on the L.P. diagram.

The greatest differences are due to the throttling action of the ports and valves, by no means sufficiently allowed for in Fig. 580. The two sets of diagrams in Fig. 583 were taken at different speeds, the full lines at 40 miles per hour, the dotted lines at 60 miles. A matter of great interest is the variation in the back-pressure in both cylinders, with practically the same curves of forward-pressure at both speeds. With the higher speed, the exhaust-pressure has a minimum at about 6 lbs. above atmosphere and rises to about

Digitized by Google

15 lbs. where compression begins—this latter point being not at all definitely marked.

Chiefly on account of this modification of the diagrams by throttling action, the work-division is quite different from that in Fig. 580, being here almost exactly equal. As to the effective steam-quantities, measurements along the line AB, between hyperbolas, give the ratio 0.92 for the full-line case and 0.95 for the dotted-line, this being the ratio of the L.P. volume to the H.P. at this pressure; that is, the "collapse" from the condition $pv=C$ is 8 per cent. and 5 per cent. in the respective cases.

Some further examples of diagrams from engines of the direct-expansion type will be found in § 69, where not only general mechanical action but also the question of thermodynamic effect are taken up. We now pass, however, to the rather more complicated case of the engine with non-simultaneous strokes, still laying most emphasis on the study of the results which can be got by the ideal pressure-volume analysis.

§ 68. The Receiver-compound Type.

(*a*) THE QUARTER-CRANK COMPOUND ENGINE.—As set forth in § 22 (*c*), the term "receiver-compound", although by no means

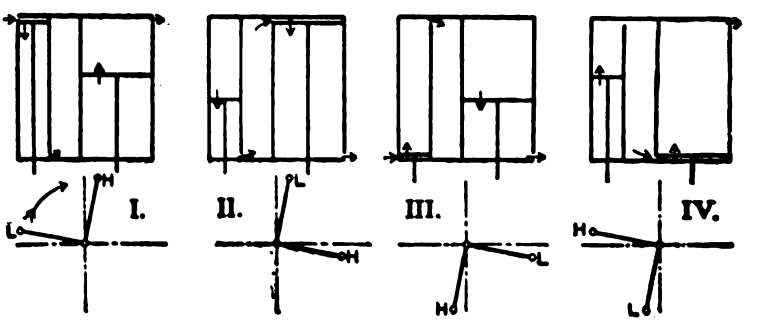

FIG. 584.—Action of the Quarter-crank Engine.

strictly distinctive, is about as short and simple a title as can be devised for the class of engines in which the strokes do not begin and end together, so that a receiver between the cylinders is abso-

Digitized by Google

lutely essential to successful working. Of this class, the engine with cranks at right-angles is the most common and important type.

The action of the steam in this engine is illustrated in general terms by the series of position-diagrams in Fig. 584. The space between the cylinders represents the receiver, and it is assumed that the cut-off takes place not later than at half-stroke in either cylinder. Diagram I. makes it evident that the steam released from the lower end of the small cylinder will have to be compressed, in cylinder and receiver, by the advancing H.P. piston; this condition lasts till mid-stroke, when the L.P. piston gets to its top end and the large cylinder starts to draw from the receiver. Position II. shows common expansion in the two cylinders and the receiver, this continuing to L.P. cut-off. The last two diagrams exhibit similar conditions for the other pair of successive cylinder-ends. Note that with the H.P. crank leading, as here, steam from one end of the H.P. cylinder passes into the opposite end of the L.P. Fig. 585 shows, however, that when the L.P. crank leads, the same ends (both "head" or both "crank") are in series. This determines the manner in which actual indicator diagrams are to be combined; but it must be remembered that, in any engine with a common receiver, the division of steam between the ends is not necessarily the same in successive cylinders; and to get entirely definite results an average combination is required, as exemplified in Fig. 41 and by the diagrams in § 69.

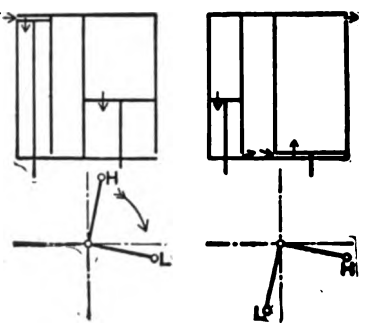

FIG. 585.—Engine with Low-pressure Crank Leading.

(*b*) VARIATION IN THE STEAM-VOLUME.—This can be most fully shown and clearly followed by the method of Fig. 586. The vertical base of this diagram is the developed crank-circle, representing also the time of one revolution; the horizontal ordinates are volumes. The primary volumes V_1, R, and V_2 are laid off as

Digitized by Google

indicated; and by plotting sinusoidal curves of piston-displacement in proper relation (see Fig. 125 I.), we get a continuous measure of the varying volume. Here clearances are disregarded and the connecting-rods are taken as "infinite".

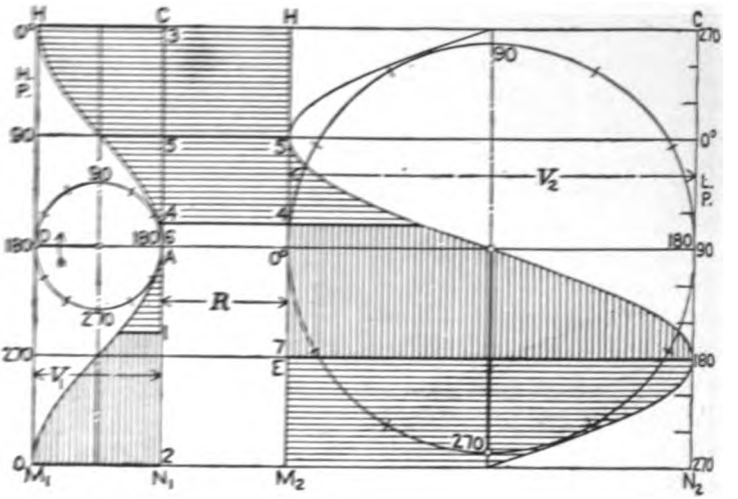

FIG. 586.—The Volume Diagram.

The action represented by the shading * of the figure, and designated by reference-numbers identical with those on Figs. 587 and 589, takes place in the H.P. crank-end and the L.P. head-end, since, for illustrative purposes, this combination agrees best with the way the curves are drawn. It begins with H.P. admission at A, lasting to the cut-off at 1; then follows H.P. expansion to end of stroke at 2. Here the valve opens to the receiver, with a sudden increase in the volume involved (at 3) and the mixing of two bodies of steam. From 3 to 5 this combined steam is compressed in H.P. cylinder and receiver, until L.P. admission begins at 5. Even after 5 there is at first a decrease in volume, because the small piston is moving so much the more rapidly; but presently

* Horizontal shading shows an action during which two or more of the main volumes are in communication; vertical shading marks one in which the body of steam is definitely confined in one of the cylinders.

Digitized by Google

expansion really begins, and continues to L.P. cut-off at 4. Thereafter, the working-steam expands in the large cylinder to 7, then exhausts; while the receiver-steam is slightly compressed by the H.P. piston, from 4 to 6.

(*c*) PRESSURE-VOLUME DIAGRAMS for this type of engine, analogous to Fig. 579, are drawn in Fig. 589, for the two distinctive cases as to the intermediate action between the cylinders. The full-line curves correspond with the conditions in the preceding figure, where the cut-offs are early; the dotted-line diagrams show the effect of late cut-off. The important distinction lies in the question whether L.P. cut-off occurs before or after half-stroke

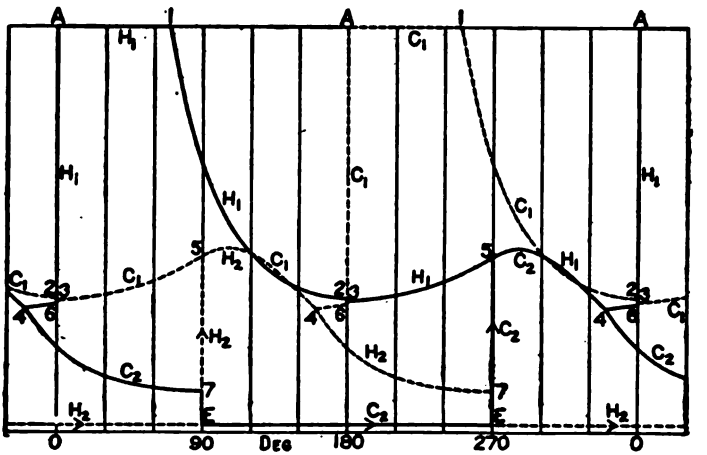

FIG. 587.—Pressures on a Time-base, Case A.

—that being taken as the point where the H.P. cylinder releases. As to general proportions, Fig. 589 has the volumes V_1 and V_2 in the ratio that would be given by the diameters 20 and 36, or as 1 to 3.24; and the receiver-volume R is made equal to the H.P. cylinder. The cut-offs, the same in both cylinders, are at one-third and at two-thirds of the stroke in cases A and B respectively. Similar points on the two diagrams have the same numbers, some of these being, however, further distinguished by the letters A and B.

Digitized by Google

It will be much easier to follow out the complicated diagram in Fig. 589 after first running over the illustrative curves in Figs. 587 and 588. These are plotted from determinations made on Fig. 589, but resemble Fig. 586 in having the developed crank-circle for a base—the degree-scale being that for the H.P. crank, with zero at the head-end dead-center.

The curves simply show how the pressures vary; they do not form closed figures, nor are the areas under them proportional to work. This system of representation has the advantage that the L.P. diagrams can be fitted under the H.P., with simultaneous pressures on the same ordinate.

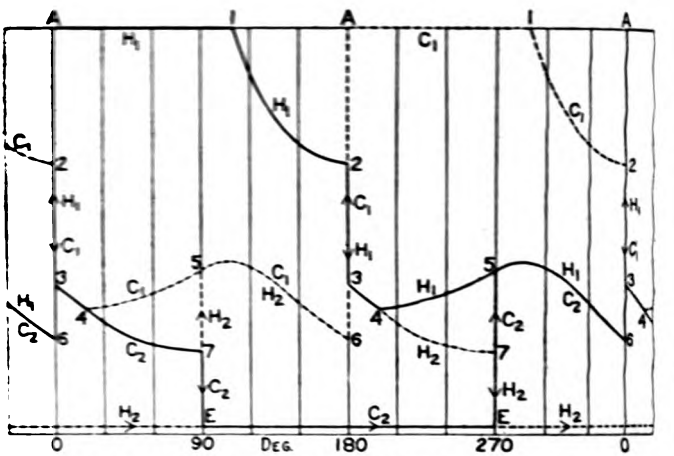

FIG. 588.—Pressures on a Time-base, Case B.

In Fig. 587 the sequence of events is as follows: High-pressure admission, A to 1; expansion, 1 to 2; release and mixing with the receiver-steam which was at 6, giving resultant condition shown at 3; compression in H.P. cylinder and receiver, 3 to 5; low-pressure admission at 5; common expansion to L.P. cut-off at 4; L.P. expansion, 4 to 7, with exhaust at E; compression in H.P. cylinder and receiver, 4 to 6. On the figures, H marks curves for head-end, C for crank-end, with subscripts 1 and 2 to designate H.P. and L.P.

In Fig. 588 the difference is that when the H.P. cylinder releases

Digitized by Google

2, the receiver is yet open to the L.P. cylinder: there is there-
e a short period of common expansion, to L.P. cut-off at 4;
ereafter, compression into the receiver raises the pressure to 5,
ıere admission to the other end of the L.P. cylinder begins.
ıis lasts to the end of the H.P. stroke, dropping the pressure to
whence it is suddenly raised to 3 by a fresh exhaust from the
her end of the H.P. cylinder.

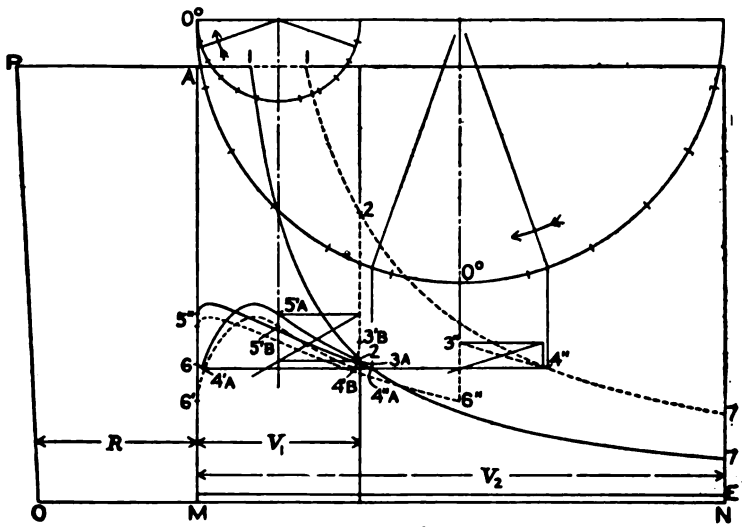

FIG. 589.—Pressure-volume Diagrams.

(*d*) DRAWING THE PRESSURE-VOLUME DIAGRAM.—Coming now to the construction of Fig. 589, we as usual have the L.P. cut-off, on the main expansion-hyperbola, for a starting-point in the derivation of the intermediate curves. In Case A, with early cut-offs as in Fig. 587, curve 45 is first laid out from 4 backward to 5; the method is more closely shown by Fig. 590, which is a part of Fig. 589 enlarged. Here C_2 is the L.P. cut-off 4″ and C_1 is the corresponding position of the H.P. piston, or the point 4′; then at the pressure p_4 the total volume v_4 has the two parts indicated on the figure; and these, added together, make v_4 extend to the ordinate through A, which is one of the secondary axes for the hyperbola-construction. For any other pair of simultaneous

Digitized by Google

piston-positions, as P_1 and P_2, addition of the two partial volumes (one in H.P. cylinder and receiver, the other in L.P. cylinder,

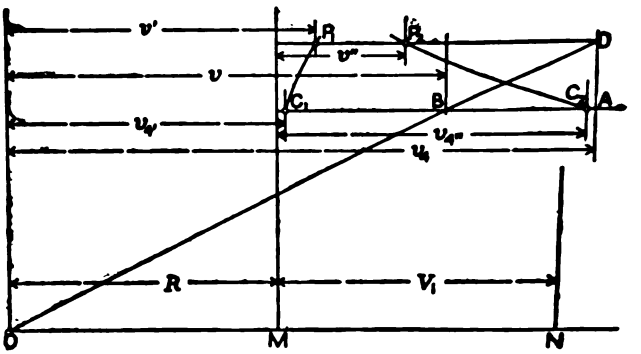

FIG. 590.—Intermediate Curves, Case A.

gives the total volume v and the point B. The usual radial line from O determines the pressure by the intersection at D; projected over, this locates vertically the points P_1 and P_2, which lie on the respective 45 curves. Having brought these curves up to 5, on Fig. 589, we next get 5'3 as a plain hyperbola with O as pole, thus finding the pressure at 3; and a similar construction gives the short curve 4'6.

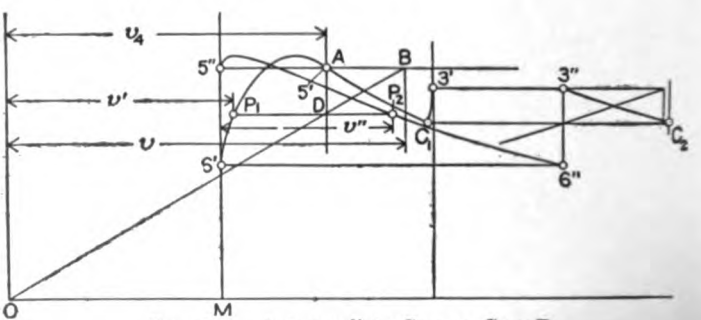

FIG. 591.—Intermediate Curves, Case B.

For Case B the operation is a little more complex. In Fig. 591, with L.P. cut-off at C_2, the H.P. p[illegible] C_1, just a little

Digitized by Google

way on the return stroke, and from C_1 the curve of compression is carried up to A or 5′ to get a starting-point for the line of common expansion. Having AB and AD as axes, we add volumes, find pressure as at D, and project over to the position-ordinates to determine P_1 and P_2. The same method is used for the short curve C3 or 43.

The greatest difference in steam-effect between this and the direct-expansion type of engine is found in the pressure-curve for the H.P. return stroke, which rises at the middle in one case, falls in the other. Further illustration is given in Fig. 592, where cut-off is varied in the L.P. cylinder only. The simplest case is seen where the latter cut-off is just at mid-stroke, for then the H.P. back-pressure curve has only two parts or phases, as against

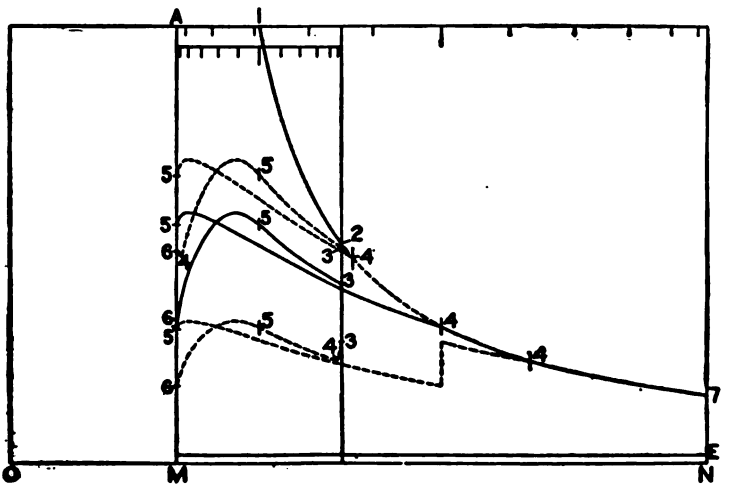

FIG. 592.—Variation in L.P. Cut-off.

three in the other cases. The general effect upon the receiver-pressure, due to varying the L.P. cut-off, is the same as was described in § 66 (*c*); but with the rather small receiver here used, the pressure-changes throughout the stroke are very great. To get a better idea of what to expect in an actual engine, we will now analyze an example with a larger receiver, taking into account the clearances and, approximately, the valve-action, as in Fig. 580.

Digitized by Google

ANALYSIS OF AN ACTUAL ENGINE.—For this example we again use proportions suitable to a locomotive, as in Fig. 580, chiefly because this will make all the secondary effects large enough to be visible even on a reduced figure. These proportions are, in fact, practically identical with those in Fig. 580, except for the receiver: as used in laying out Fig. 593, and expressed in terms of the L.P. cylinder as unity, they are,

V_1	C_1	R	C_2	V_2
.36	.07	.54	.12	1.00;

the receiver being one and one-half times the size of the H.P. cylinder. The valve-action, with the same proportions as on Figs. 580 and 582, but with both exhaust-laps made zero, is dia-

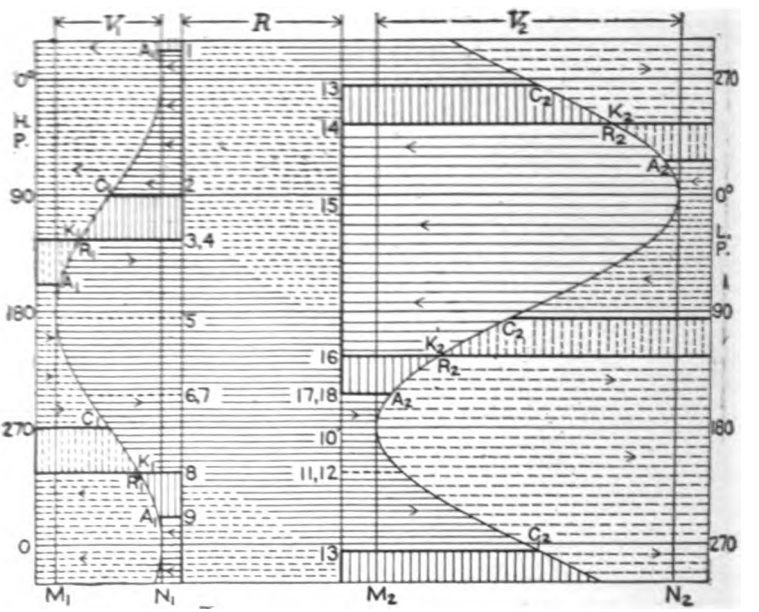

FIG. 593.—Volume Diagram for Actual Engine.

grammed at Fig. 594 II., and the events there determined are properly located on the volume-diagram, Fig. 593, and on the *pv* diagram, Fig. 594 I., with the same designating letters.

Digitized by Google

In Fig. 593, full-line shading is used for the "cycle" made up of the operations in H.P. crank-end and L.P. head-end, dotted shading for the other cycle. Merging of these two cycles, where it occurs, is indicated by running together the two kinds of shading in the receiver-space. Beginning at point 1, we have H.P. admission to cut-off at 2, then expansion to 3 (follow the operation on Fig. 594 also). When release takes place at 3, the receiver is open to the L.P. end which belongs to the other cycle—the same effect being there produced that this cycle receives at 11, 12. As the result of the mixing, the H.P. steam drops from 3 to 4, the L.P. steam rises from 11 to 12. On Fig. 594, all these intermediate changes are represented, by the full black lines, as if they resulted from a full, immediate valve-action, with instantaneous equalization of pressure throughout the spaces in communication: and the dotted curves show a guess at what actually would take place.

After equalization at 4, there is common expansion till L.P. cut-off at 5, then compression in H.P. cylinder and receiver to L.P. admission at 6. Here, with H.P. drop from 6 to 7 and L.P. rise from 17 to 18, really begins the L.P. portion of this cycle. From 7 nearly to 8 (or from 18 past 10), there is compression; at 8 the H.P. exhaust closes, and at the same time the other end of the H.P. cylinder releases, causing the rise from 11 to 12, as already explained. It will be noted that on account of the very early release from the H.P. cylinder, this engine is decidedly in the class typified by Fig. 588, even though the L.P. cut-off occurs very soon after half-stroke.

(*f*) Construction of Fig. 594.—With Fig. 593 to make clear the course of events, it is not difficult to trace out fully the whole intermediate action between the cylinders; but we have here a case where the purely graphical method must, for ease and clearness, yield to a method of measurement and computation.

The L.P. cut-off is, of course, the starting-point. Just as in Fig. 580, we can see that the H.P. compression-hyperbola will be outside of the L.P. curve 22–16, hence 13–14 must be below or inside of 3–19. The pressure at 13 which will make 22–13 equal 21–19 is computed as follows.

Digitized by Google

At point 20, $p=62.5$, $v=0.970$ in H. and R. plus 0.665 in L. $=1.635$; these volumes being in terms of V_2 as 1.00.

For cylinder-steam alone (working + clearance steam), this gives $pv=62.5\times0.665=41.56$ for curve 3–19; while for the L.P. clearance-steam, taking co-ordinates at point 16, the product is $pv=18\times0.345=6.22$.

Now let p be the unknown pressure at point 13; then for the volumes at 19 and 22 we have the values, respectively, $41.56/p$, $6.22/p$.

After the L.P. cut-off, steam in the volume 0.970 is compressed, along 56, to the next L.P. admission, the volume being reduced to 0.866. Here this steam, $p\times0.970$ in amount, mixes with the L.P. clearance-steam, and the resulting quantity is measured by $(p\times0.970+6.22)$ with the pressure at the point 7. This is still further compressed to H.P. exhaust-closure at 8, where the volume is 0.148 in H. plus 0.742 in R. and L., or 0.890 in all. The pressure at this point 8 is

$$\frac{p\times0.970+6.22}{0.890};$$

multiplying this by the volume 0.148 we get the measure of the H.P. clearance steam; and division of this product by p gives the volume at 21.

The four volumes along the line 22–19 being now known or expressed in terms of p, we have

$$\begin{array}{ccccccc} v_{13} & - & v_{22} & = & v_{19} & - & v_{21} \\ 0.665 & - & \dfrac{6.22}{p} & = & \dfrac{41.56}{p} & - & \dfrac{0.148(0.970p+0.622)}{0.890p}. \end{array} \quad . \quad (390)$$

This gives

$$0.665p-6.22=41.56-0.1612p-1.034$$

$$p=56.64.$$

Knowing this p, all the critical pressures can be easily calculated, as indicated above; and the same method is as good as any for getting a series of points on the several c[illegible]. Thus for the common expansion 4–5, 12–13, we have t[illegible]duct pv is $56.64\times0.635=92.6$, at 13. Measuring vol[illegible]g. 593 [illegible]

the results in Table 68 A. Similar calculations are used for curves 7–8, 18–10–11. The only plain hyperbola, among all these intermediate curves, is 56, with a pole located by measuring off the receiver-volume R to the left from O. Of course, the constructions shown in Figs. 590 and 591 might be used here; but the other

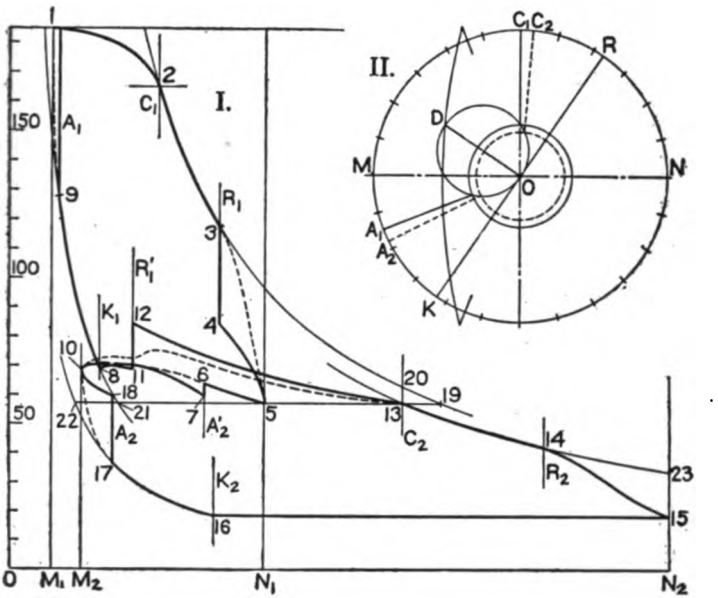

FIG. 594.—Ideal Steam-diagram for Real Engine.

method seems preferable, especially with the slide-rule for computation. To get p at 13, the determination by calculation is overwhelmingly preferable to graphical determination by successive trials.

TABLE 68 A. POINTS ON CURVES 4–5, 12–13.

	$H+R$	L	
At H.P. release	$v=0.892+0.208=1.100$		$p=84.2$
" 135° H.P.	$v=0.917+0.267=1.184$		$p=78.2$
" 150° "	$v=0.946+0.370=1.316$		$p=70.4$
" 165° "	$v=0.964+0.491=1.455$		$p=63.2$
" 180° "	$v=0.970+0.620=1.590$		$p=58.3$

Digitized by Google

7. GENERAL CHARACTER OF THE RECEIVER-ACTION.—As already remarked in 4), the distinguishing characteristic of the two types of *compound*-engine diagram is the shape of the exhaust line for the H.P. cylinder, which drops toward mid-stroke with simultaneous strokes, but rises at the middle when the cranks are at right angles. We shall fully enough cover this matter of relative timing by considering further what happens with cranks at 120 degrees.

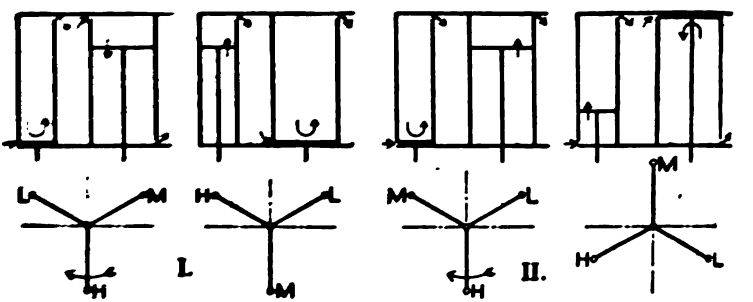

FIG. 595.—Different Arrangements of the Three-crank Engine.

In Fig. 595 are illustrated the relations between the first two stages of a triple-expansion engine, only the high and intermediate cylinders being represented in the sketches. There are two possible arrangements, the first with the high crank leading, or the order H-M-L, the other with low crank leading and the order L-M-H or H-L-M. In the first case, Fig. 595 I., when piston H has completed its stroke and exhaust into the receiver has begun, piston M is at about quarter-stroke and is yet drawing steam. There will be, therefore, first a gradual fall of pressure till M cut-off, then a rise as piston H continues to return, finally a drop when piston M gets to the beginning of a new stroke (sketch 2) and begins to draw steam from the receiver. Whether this last drop will show on the H diagram depends upon how soon compression begins in that cylinder. Among the diagrams that follow, examples of this arrangement are given in Figs. 605 I. and 607. Complete suppression of the final drop is seen in Fig. 607 I.; at II. it appears only as a slight change in direction from the more rapid upward slant near mid-st[illegible] in 605 I. the action is clearer,

Digitized by Google

being given more time to develop, but is much diminished in amount because the receiver is very large.

Of the other arrangement, outlined in Fig. 595 II., only one actual example is given, in Fig. 605 II. Here the receiver is closed when cylinder H exhausts, piston M being at about three-quarters stroke; but cylinder M soon starts to draw (sketch 2) and remains open till piston H gets well toward the end of its stroke. The retarding effect of the passages will account for the fact that the drop of the H exhaust-line (on Fig. 605 II.) begins somewhat later in the stroke than it would under the ideal conditions which have been assumed in previous discussions.

(*h*) VALUE OF THE VOLUMETRIC ANALYSIS.—Increasing familiarity with actual diagrams will develop and strengthen the conviction that the detailed analyses given in Figs. 580 and 594 are likely to be useful rather as leading to a thorough understanding of the character of the interactions between the cylinders than as practical methods to be closely followed when seeking quantitative results. Throttling effects, evidenced by the rounding of corners and the smoothing out of (ideally) abrupt changes, and by the pressure-gap between the successive stages, together with departures from the law $pv = C$ due to varying thermal reactions, decidedly modify results got by the methods just referred to—a comparison of Figs. 580 and 583 illustrating these statements very forcibly. The influence of steam-passages, cylinder-walls, jackets and reheaters, etc., cannot be reduced to numerical expression, but can be estimated and predicted only by analogy. The method that suggests itself, then, for the design of the cylinders of a multiple-expansion engine, is about as follows:

Start with an elementary diagram like Fig. 577, and sketch in roughly the shape of the intermediate curves, having due regard to crank-arrangement and relative size of receiver, with allowance for pressure-losses.

Introduce the effect of the probable clearance by a change the reverse of that used in getting Fig. 32 from Fig. 31—that is, swing the diagram, originally drawn against the vertical axis, out beyond the compression-hyperbola; this will give actual cylinder volumes.

Having thus found tentative proportions, use the principal

Digitized by Google

parts of the preceding pressure-volume-constant method, with the various allowances dictated by trained judgment, to lay out the probable indicator diagrams for the engine. These serve as a basis for further adjustments of the cylinder-volumes, and furnish data for the design of the valve-gear.

Actually, in the development of various types of engines, the evolution has taken place by such gradual advances that not many designers have had to take long steps at a time beyond the border-line of well-established empirical knowledge. Of course this border-line is being continually pushed forward, and the ground back of it more thoroughly mapped out.

As an initial contribution to the fund of knowledge which an expert along this line will have to accumulate and absorb, a number of typical combined diagrams will now be given.

§ 69. Diagrams from Multiple-expansion Engines.

(*a*) GENERAL METHODS.—Nearly all the diagrams which follow, Figs. 596 to 608, have been redrawn from published descriptions of tests of the various engines—in many cases from combined diagrams, in others from the indicator cards. This makes them a little less accurate than if laid out directly from original data. They are all according to the simple scheme of bringing clearance-lines to a common axis, or like the full-line diagram in Fig. 41. Where the clearance-effects are large, in the locomotive and marine-engine diagrams, Figs. 596, 607, and 608, hyperbolas along the expansion and compression curves of the respective diagrams are brought to immediate, horizontal reference lines, for a comparison of the volume-measures of the working-steam; in the other cases, relative values of the product pv are given for selected points.

The pressure-volume measures are indicated by the numerical values given under the letter M on nearly every figure. From the total value of pv, for any point on the expansion-curve, is subtracted the value for the clearance-steam, as found from a point on the compression-curve. Then the net pv for the H.P. cylinder or at H.P. cut-off is taken as unity, and the other values expressed in terms of this unit.

Digitized by Google

Similarly, under the letter D are given sets of numbers showing the work-division among the several cylinders or stages, the total work represented by the diagram being taken as unity.

For the sake of a comparison of thermodynamic results, these diagrams are drawn so as to represent the performance of one pound of steam, all to the same scale of pressure, nearly all to the same scale of volumes. This gives some of them, especially those in Fig. 596, a rather awkward shape for the present discussion of mechanical features. The manner of finding the volume-scale can best be explained by means of an example, using the calculations for Fig. 597. Here the steam-consumption was found to be, for the whole test, $S_H = 15.51$ lbs. per horse-power-hour. For the diagrams combined, the speed was $N = 20.00$ R.P.M. and the I.H.P. was 266.9. This gives 4140 lbs. of steam per hour, 690 per minute, 3.45 per revolution, 0.863 per cycle, the engine being duplex, with four sets of cylinder-ends and of diagrams. Of the total steam consumed, 11.1 per cent. was condensed in the jackets, the rest used in the cylinders; so that the weight of cylinder-steam per cycle is 0.766 lb. The mean volume of the L.P. cylinder (nominal), or the piston-displacement for one stroke, is 28.67 cu. ft. Now if 28.67 cu. ft. cares for 0.766 lb., the proportional volume for 1 lb. is $28.67 \div 0.766 = 37.36$ cu. ft. This value having been determined for the L.P. diagram, the other volumes are laid off according to the ratios given under the figure. The scales used for both coordinates are chosen with regard to the space available for the figures: with large expansion or a low terminal pressure, the end of the L.P. diagram has to be broken off and transferred to the clear space above.

With only a few exceptions, the diagrams are drawn for one pound of cylinder-steam, or for more than one pound of total steam consumed in a jacketed engine. On each, the saturation-curve for 1 lb. of dry steam is drawn in full-line; and the proportion of steam shown by the indicator can be estimated, at any pressure, by comparing the width of the diagram (or the horizontal distance between expansion-curve and compression-curve), with the distance between the one-pound curve and the vertical axis. This comparison would be made more evident by transferring the

Digitized by Google

diagrams so that their compression-curves would agree with the pressure-axis, as in the dotted case of Fig. 41, illustrated also in Fig. 609; but the extra labor and the added confusion of lines on small-scale figures are sufficient reasons for omitting this step.

Having the constant-weight curve for 1 lb., the additional amount of jacket-steam is shown by just the beginning of another curve for the whole weight of steam used, drawn in dotted line to the top of the figure. The exceptions, where jacket-steam is included within the full-line curve, are to be found in Fig. 601, where the purpose is to compare jacketed and non-jacketed action; in Figs. 607 and 608 where the jacket-steam was not separately determined; and in Fig. 606, where the conditions are decidedly special.

In every case, the diagrams here given are at least the mean of a full set of indicator cards—in Figs. 596 II. and 597, for instance, four sets of ordinates are measured and averaged: in some cases the diagrams are the mean of a number of sets of cards, representing the whole of a long test.

Under the title of each figure are given, without symbols, the essential dimensions of the engine, as follows:

In general					As under Fig. 605				
D_1	D_2	D_3	×	S	28″	48″	74″	×	60″
d_1	d_2	d_3		V_2/V_1	2—4″	2—4″	2—4″		2.98
c_1	c_2	c_3		V_3/V_1	.014	.015	.0077		7.11

D = diameter of piston, S = stroke, in inches.
d = diameter of piston-rod, c = clearance-fraction.

When there is a rod on each side of the piston, two values of d are given. In Fig. 597 the L.P. piston, and in Fig. 605 I. all the pistons have two rods, in order that there may be room for the connecting-rod between them. When there are two cylinders in one stage, as in all three parts of Fig. 608, the two diameters are hyphenated, and for the corresponding V the combined volume is used. In a few cases the ratio of the receiver R to the preceding cylinder is stated.

Besides these dimensions, the most important observations and results as to the working of the engine are also given—except

Digitized by Google

pressures, which are well enough shown by the diagrams. The meanings of the various symbols are:

N = revolutions per minute—double-strokes, when there is no rotating shaft;
V = mean speed of piston, in feet per minute;
p_m = mean effective pressure, reduced to the L.P. piston after the usual manner—see § 23 (*c*), Eq. (111);
H = indicated horse-power;
S_H = steam per horse-power-hour;
J = fraction of total steam used by jackets and reheaters;
I = indicated steam consumption, generally expressed as a fraction of the cylinder-steam, but where marked "total" including the jacket-steam in the basis. Of the subscripts, the first, 1, 2, 3, refers to the cylinder, the second, C or R, to cut-off or release.
t_s = number of degrees of superheat.

Most of these data, together with additional information as to thermodynamic performance, will be found collected in the Tables in Chapter XIII. The numbers here used to designate the test show their location in those Tables. Comment on this side of the subject will be reserved for Chapter XIII.

(*b*) The Compound Locomotive.—The type of action in this engine is well illustrated by Figs. 583 and 596—high pressure of both admission and exhaust, large clearances, and strong throttling effects being the marked characteristics, with a small total ratio of expansion, even when dropping the steam well toward the exhaust-pressure at the effective release. The French engine was chosen for illustration rather than one of several American four-crank designs tested in the same series, partly because it gave smoother indicator cards, chiefly because it has separate valve-gears for the H.P. and the L.P. cylinders, permitting an independent adjustment of the cut-offs. At II. in Fig. 596 the L.P. cut-offs are quite a little later than the H.P., which lowers the receiver-pressure, but gives a work-division of which the advantage is not apparent, unless it be desired to diminish the amount of work done by the L.P.

Digitized by Google

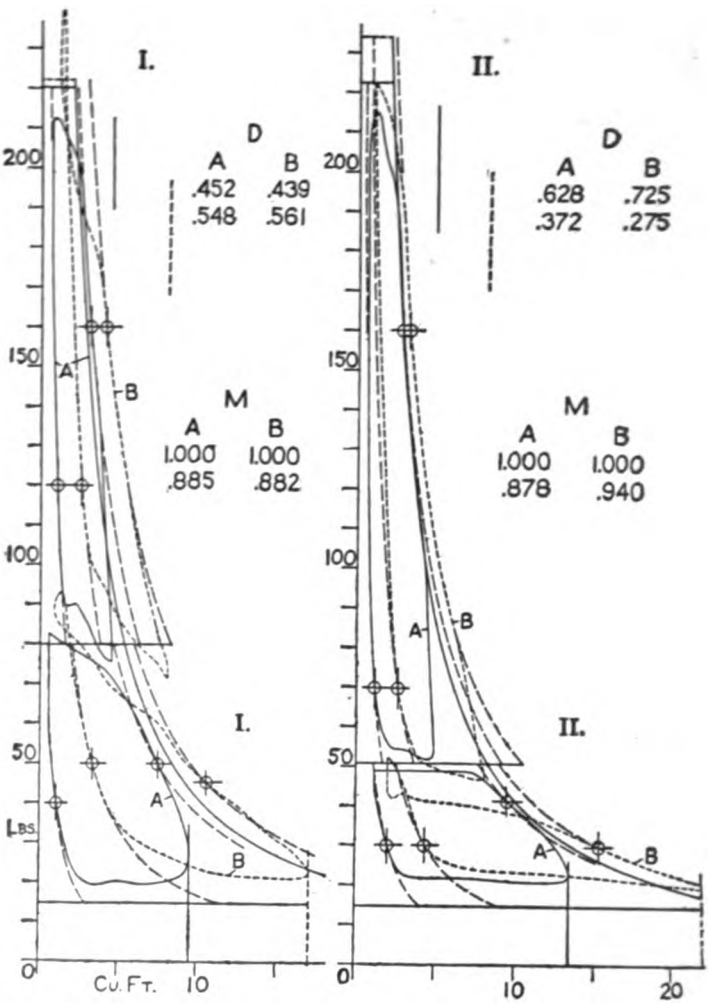

FIG. 596.—Sample Diagrams from Compound Locomotives, tested in the special plant of the Pennsylvania Railroad at the St. Louis Exposition of 1904.

I. Cross-compound (two cylinder) Consolidation			II. De Glehn Compound (4-cyl.), French built, Atlantic type		
23	35	×32	Two 14.2	23.7	×25.2
4	4	2.333	2 4–2.7	2.7	2.808
.167	.057	$R=2.49V_1$		.098	$R=1.61V_1$

Digitized by Google

cylinders, which are between the frames and act upon crank-pins of limited area.

The peculiar shape of the H.P. exhaust-line in II., for an engine with cranks opposite, is due to the fact that the receiver is common to the two sides of the locomotive, the rise toward mid-stroke being caused by inflow from the other H.P. cylinder. The pairs of opposite cranks on the two sides are set at 90° with each other. In I. the cranks are, of course, at right angles.

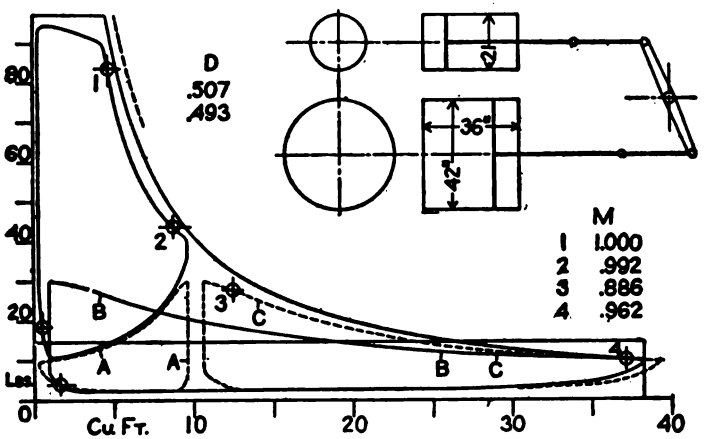

FIG. 597.—Holly (Gaskill) Pumping Engine at South Bethlehem. Horizontal, duplex, direct-expansion, no receiver, full jackets. May 1902: compare Test 341.

Two 21	42	×36	$N=20.00$	$V=120$	$p_m=26.7$
3	2–3¼	4.017	$H=266.9$		$S_H=15.51$
.036	.025		$J=0.111$	$I_{1C}=.870$	$I_{.R}=.955$

(*c*) LOW-SPEED DIRECT-EXPANSION ENGINES.—Passing now to a radically different class of engines, we take up the four examples in Figs. 597 to 600. The first is an older design of the engine in

FIG. 596—(*Continued*).

		N	V	e	p_m	H	S_H	
I.	A	80.0	427	0.528	75.3	932	19.69	Compare
	B	160.0	854	0.496	37.0	890	23.18	Test 201
II	A	160.0	672	0.497	52.7	945	20.67	Compare
	B	240.0	1010	0.342	29.8	802	21.62	Test 202.

Digitized by Google

Fig. 598 with atmosphere as receiver. The low-pressure diagram is drawn in three different ways: first, at A, it is placed under the H.P. diagram, on the same base-line, chiefly to show how nearly the lines of common expansion agree; next, at B, it is stretched out to the full length representing the volume of the L.P. cylinder, as in all the other figures; finally, at C, and as the best method of testing the continuity of the expansion, it is laid off in the form

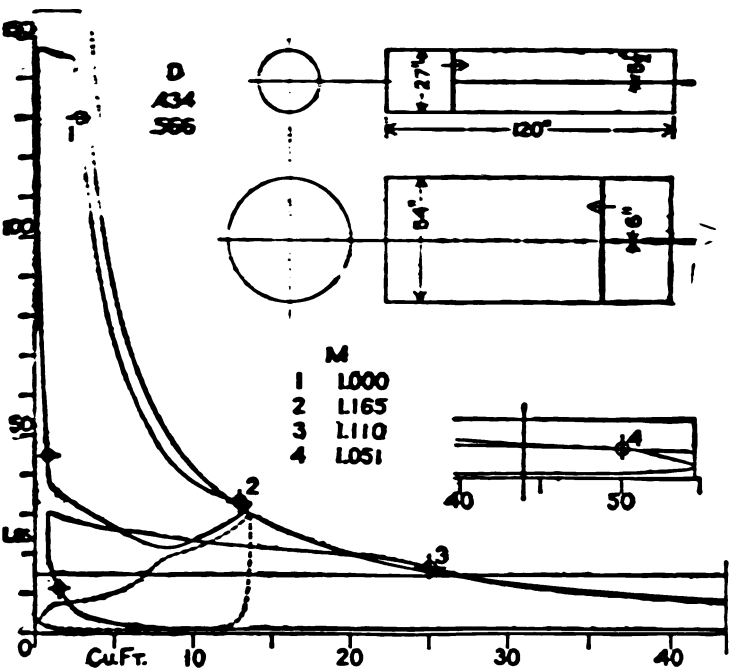

FIG. 598.—Leavitt Pumping Engine at Louisville.
Vertical, compound, beam-fly-wheel, reheating receiver, full jackets.
Test 343, April, 1894. F. W. Dean, Trans. A.S.M.E., 16–169.

27	54	×120	$N=18.57$	$V=372$	$p_m=24.0$
$5\frac{1}{2}$	6	4.015	$H=643.4$		$S_H=12.22$
.0159	.0153		$J=0.167$	$I_{HC}=.766$	$I_{LC}=.961$

corresponding to CEFS on Fig. 578. At the beginning of the stroke the communicating volume is made up [illegible] and both clearances: diagram C starts at this distance fr[illegible]tical axis, and its

Digitized by Google

length is $(V_2 - V_1)$. An interpretation of this latter arrangement, from the point of view of work-performance, is that an area A_1 of the L.P. piston receives the work represented by diagram A, and an annular area $(A_2 - A_1)$ receives the work of diagram C. That is, of course, essentially the same as putting the diagram into the form of E'CEFG on Fig. 578: but here the L.P. clearance must be interposed between A and C, and the presence of a receiver would introduce complications such as would make this method of little utility.

Fig. 598 shows a performance of higher excellence. The combined effect of low speed and full jacketing is seen in the unusually marked re-evaporation toward the end of the H.P. expansion,

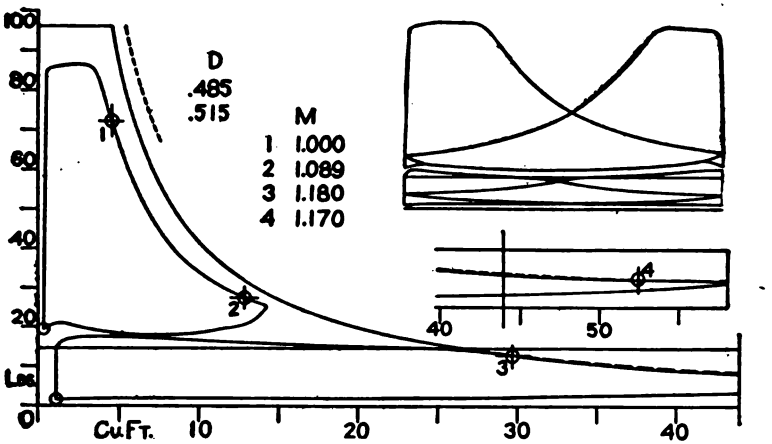

FIG. 599.—Worthington High-duty Pumping Engine, on oil pipe-line. Horizontal, duplex, compound, reheating receiver, full jackets. Test 337, April, 1891. J. E. Denton, Trans. A.S.M.E., 12-975.

Two 33	66	×37.54	$N = 20.13$	$V = 126$	$p_m = 17.5$
5½, 5½	5½	4.10	$H = 456.7$		$S_H = 16.40$
.0251	.0188	$R = 0.7V_1$	$J = 0.161$	$I_{1C} = .788$	$I_{2R} = 1.049$

and in the fact that the apparent or indicated steam is greater in the second than in the first cylinder. The mechanism connecting the two pistons is essentially the same as in the preceding engine, though different in its arrangement and proportions.

Comparing Fig. 599 with 597, we see larger losses by cylinder

Digitized by Google

condensation in the H.P. cylinder, and more wasted area between the diagrams, so that even with a good deal longer expansion the steam-consumption is higher. But the use of a fairly early cut-off leads to a great gain over the older type of direct-acting pump with full-stroke admission.

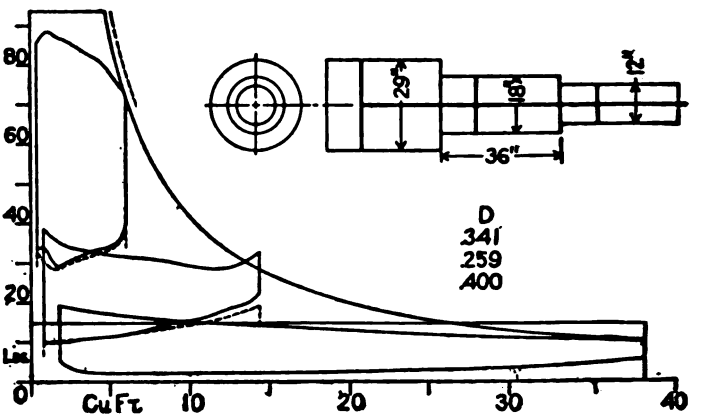

FIG. 600.—Worthington Triple-expansion Pumping Engine. Horizontal, duplex, superheated steam, jackets.
Test 332, Nov., 1899. E. H. Foster, Trans A.S.M.E., 21–788.

12	18	29	×18.4	$N = 33.66$	$V = 103$	$p_m = 25.7$
			2.25	$H = 105.1$		$S_m = 16.59$
.064	.056	.050	5.83	$J = .078$		$t_s = 143°$

An efficient example of the latter type is given in Fig. 600. The admission-line of each of the lower stages is dotted in beneath the exhaust-line of the stage above, to show the pressure-drop. The loss by receiver-drop is, of course, the most striking feature of this diagram. The effect of superheat and of the jackets is seen in the very full volumes realized at cut-off—the heat-equivalent of the receiver-drop loss helping in this respect. The set of essentially similar diagrams analyzed as to driving-force action in § 36 (*h*) shows how nearly uniform this driving-force will be.

(*d*) THE EFFECT OF STEAM-JACKETING.—We now take up engines of the Corliss type, and of the size and speed usual for driving machinery and electric generators. The first pair of examples, brought together in Fig. 601, afford a most instructive

Digitized by Google

comparison between the systems of non-use and use of steam-jackets—each engine being properly designed for its particular conditions. In A we have a large engine at quite fairly high speed, both size and speed being so great that jacketing would have little if any useful effect: the engine has a reheater in the receiver, but even that was left out of action during the tests. In B, on the other hand, the engine is smaller, the speed is low, and the ratio of expansion is somewhat greater; the jackets are fully applied to barrels and heads of cylinders, and to the receiver. Note that diagram B is drawn for one pound of total steam, the jacket-steam being included under the one-pound saturation-curve, as indicated by the short dotted curve at the top.

To prepare the way for a comparison of thermal actions in these two cases, we note first that engine A is working with a lower admission-pressure and a higher exhaust-pressure than engine B, besides having a less complete expansion; if the two were made alike as to these major conditions, A would slightly surpass B in steam-economy, instead of falling 3.5 per cent. behind, even accepting the larger pressure-loss between the cylinders which is caused by the higher speed. The great advantage of size and speed appears in the greater fullness of the diagram, or the relatively larger volume during expansion, especially in the H.P cylinder.

In this connection the "quality-curves" plotted in the upper part of the figure are of interest. These give the proportion of the actual steam in the cylinder which is shown by the indicator throughout the expansion: for Case B this would be got by a comparison of the diagram with the abscissa of the dotted steam-weight curve which is only begun on the figure and which would represent the volume of 0.881 lb. of steam, according to the value of J for this case. Among the numerical quantities under A, the values of I first given are from the original report, those in parenthesis are from the diagrams as here plotted. The rising of the curves indicates re-evaporation as expansion progresses. Curves of this sort, carefully laid out from accurate measurements, serve to show very clearly the character of the thermal action in the cylinder.

Digitized by Google

Comparing these two engines, we see that the effect of the jackets in B is to raise I to about the same average value as in A in spite of overcoming the influences of lower speed and smaller cylinders;

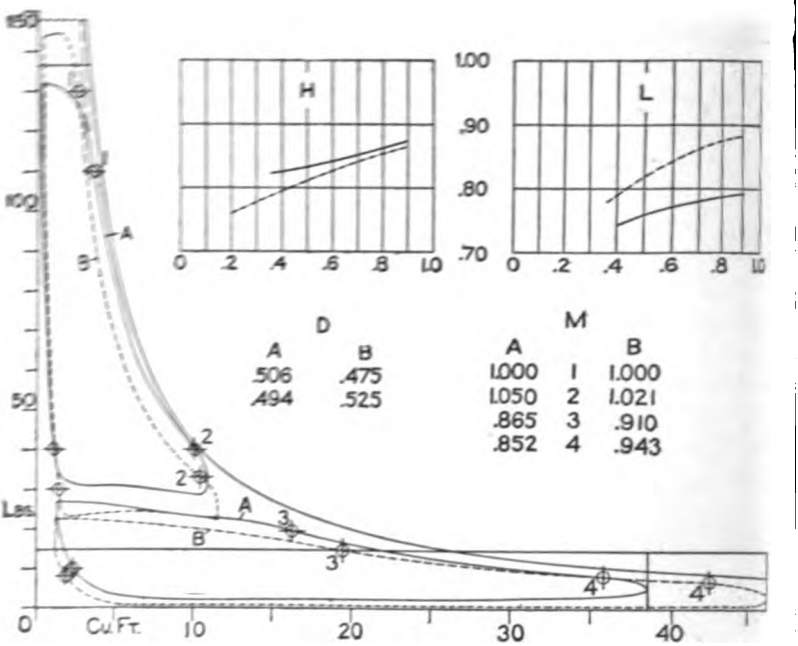

FIG. 601.—Comparison of Unjacketed and Jacketed Engines.

A. Horizontal, cross-compound, Corliss, plain receiver, no jackets.
Test 254, 1893. J. E. Denton and others, Trans. A.S.M.E., 15–882.

30	60	×72	$N = 65.2$	$V = 783$	$p_m = 27.5$
		3.48	$H = 1592$		$S_H = 13.50$
.026	.036		$I_{IC} = .875(.82)$		$I_{.R} = .845(.79)$

B. Remodelled beam-engine, Corliss gear, reheater and full jackets.
Test 333, May 1895. Michael Longridge, ENGINEERING, 1896, I. 132.

17	34	×60	$N = 34.0$	$V = 340$	$p_m = 23.3$
4	4	4.085	$H = 216.2$		$S_H = 13.05$
.0345	.027		$J = 0.119$	$I_{IC} = .76$	$I_{.R} = .88$

but this leaves B nearly 12 per cent. behind A as regards thermal action, so that in effect the jacket-steam just overcomes the handicap as to size and speed. With the jackets, of course, engine

Digitized by Google

would fall a good deal farther behind A in the matter of cylinder-all losses.

Fig. 601 is intended to show typical extreme cases: but a

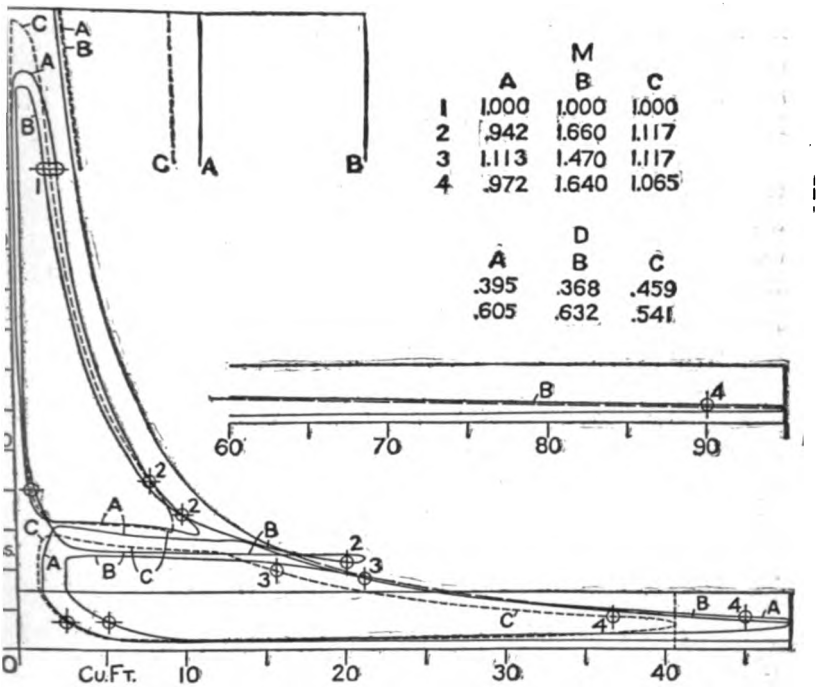

FIG. 602.—McIntosh & Seymour Generator Engine.
Vertical, cross-compound, slight superheat, reheater, jackets.
Compare Tests 243, 244; 1901. L. S. Marks, Trans. A.S.M.E., 25–443.

23	48	×48	A, full load, B, half load, with jackets and reheater; C, full load, without jackets and reheater.
5	5	4.40	
.02	.03		

	N	V	p_m	H	S_H	J	I_{1C}	I_{1R}	I_{2C}	I_{2R}
A	101.9	815	23.5	1047	13.59	.075	.68	.78	.80	.91
B	103.4	827	12.2	552	13.71	.090	.58	.85	.90	.95
C	101.9	815	24.7	1105	14.41	....	.60	.75	.76	.83

better estimate of jacket-effect can be formed by comparing results from the same engine, as in Fig. 602. For this purpose we consider diagrams A and C. Here the pound of cylinder-steam is the

Digitized by Google

unit, which makes the diagram with jackets appear relatively better than it really is. The jackets cause slightly drier steam in the H.P. cylinder, but very greatly diminish the condensation in the L.P. cylinder: and it is apparent that the reheater helps to hold up the admission-pressure in the large cylinder. The final criterion is the value of S_m, and with this engine jacketing is to be credited with a gain of about six per cent. at full load; at half load the gain was about ten per cent.

Diagram B, to be compared with A, shows the larger cylinder-condensation and the greater re-evaporation with early cut-off; and also gives an example of a loop at the lower end of the H.P. diagram. Noting the values under D on the figure, we see that the L.P. cut-off is too early at both loads with the jackets. Without jackets, the fact that relatively smaller steam-volumes are realized in the L.P. cylinder tends to equalize the work-division.

This latter fact, or the change in the general character of the main expansion-curve, forms a strong point of difference between jacketed and unjacketed engines. In the first type, the curve holds up to and even rises beyond the equilateral hyperbola—in Fig. 602, Case B, the rise is unusually great, as shown by the values of pv under M. Case C is anomalous, but the diagrams in Fig. 602 are, in the original publication, probably the least accurate of those here presented. Case A of Fig. 601 and Case B of Fig. 603, with Fig. 596 for smaller cylinders, are more truly characteristic of non-jacketed engines.

(*e*) THE ENGINE WITH HIGH SUPERHEAT.—A very good example of the use of highly superheated steam, supplied by a separately fired superheater according to the Schmidt system, is given in Fig. 603, with diagrams from the same engine when using saturated steam dotted in for comparison. The indicator cards give another comparison, on the basis of approximately equal power development—as against equal steam-weights in the combined diagrams. In spite of the cooling effect of the reheater-coil (through which a part of the main supply passes) and of the cylinder walls, the steam is quite highly superheated at H.P. cut-off, is slightly superheated at H.P. release, and after reheating is still above saturation during the first part of the L.P. With considerable

superheat, the curves of expansion and compression depart quite widely from the hyperbola: for the H.P. expansion in Case A,

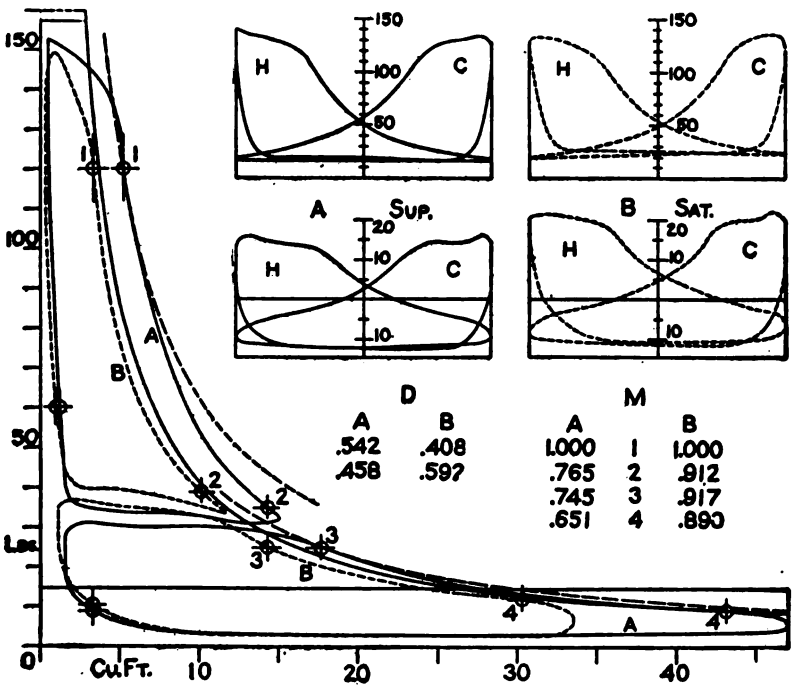

FIG. 603.—Corliss Engine with Highly Superheated Steam. Horizontal, cross-compound, reheater through which passes a part of the main supply of steam, no jackets.

Test 291, July, 1903. D. S. Jacobus, Trans. A.S.M.E., 25–264.

				N	V	p_m	H	S_H
16	28	×42	A	102.3	716	31.5	420.4	9.56
3	3½	3.08	B	102.2	715	30.5	406.7	13.84
.041	0.58							

A with steam superheated about 375°; B with saturated steam.

the value of the index n in $pv^n = C$ is 1.26, found from the coordinates of the points marked 1 and 2 by substituting in the formula

$$n = \frac{\log p_1 - \log p_2}{\log v_2 - \log v_1}, \quad \ldots \ldots \quad (391)$$

Digitized by Google

which comes directly from $p_1v_1^n = p_2v_2^n$. And just as this expansion-curve drops more rapidly than with wet steam, so also does the compression-curve rise more rapidly than in case B.

This marked change in the shape of the expansion exerts quite an influence upon the work-division. The steam-volumes in

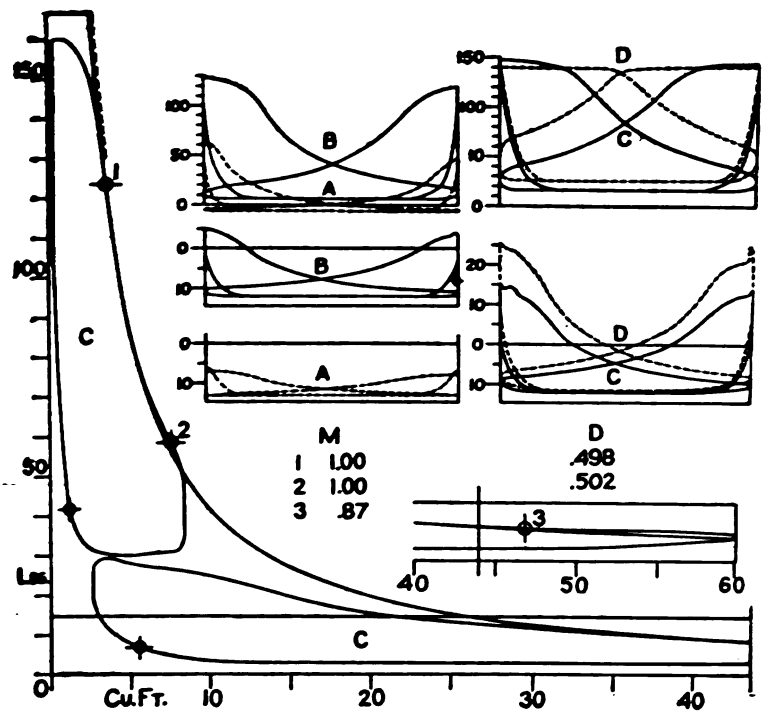

FIG. 604.—Fleming Four-valve Engine, high cylinder-ratio. Tandem-compound, reheating receiver, no jackets. Test 236.2.1903. B. T. Allen, Trans. A.S.M.E., 25–212.

15	40	×27	$N = 150.1$ $V = 675$ $p_m = 19.1$
$2\frac{11}{16}$	$2\frac{11}{16}-1\frac{3}{4}$	7.33	$H = 501.6$ $S_H = 12.66$
.0395	.0467		$J = .0427$

the L.P. cylinder are relatively so much smaller when working from high superheat that the cylinder-r ill be smaller for the same completeness of expansion (a y the pressure

Digitized by Google

release). The combined diagrams show very clearly that a four to one ratio would be needed for good expansion with saturated steam, with which increase there would be a lowering of the receiver-pressure because of the larger volume at L.P. cut-off. As regards steam-economy, it must be borne in mind that the heat of formation of the pound of steam is very considerably increased when its temperature is raised several hundred degrees.

(*f*) THE HIGH-RATIO COMPOUND ENGINE.—Typical values of the ratio of the L.P. to the H.P. cylinder in usual practice are 2.4 to 2.8 for non-condensing, 3.5 to 4.5 for condensing engines. Another type of design,* aiming at full expansion with the fewest possible cylinders, is based on a ratio of about 7, which is a very common total ratio for the triple-expansion engine. The slightly greater thermal losses (as compared with a three-stage engine) are compensated by the fact that there is only one set of receiver losses: but the necessity of more than the desirable amount of receiver-drop, as shown in Fig. 604, partly neutralizes the gain due to greater expansion.

As to the actual performance shown by this figure, it is a little too good to be accepted as entirely reliable: in other words, the smallness of the "missing quantity", as evidenced by the fact that, with only a little clearance-steam back of the diagram, its expansion-curve is thrown out to or beyond the unit-weight curve, does not correspond with the size and speed of the engine and with the use of saturated steam.

The indicator diagrams illustrate very fully the variation in steam distribution with change of load, the proportions being $A=\frac{1}{4}$, $B=\frac{5}{8}$, $C=1$, $D=1.1$ of rated load. The low admission-pressure in Case B is due to a decrease in the boiler-pressure, while in Case A a further drop in boiler-pressure is supplemented by throttling due to a small valve-opening—see Fig. 493.

(*g*) TRIPLE-EXPANSION PUMPING ENGINES.—The slow-running pumping engine, with small pressure-losses between the cylinders, and with the thermal losses minimized by the full and effective use

* Generally known as the Rockwood system, from Mr. Geo. I. Rockwood, the most prominent introducer.

Digitized by Google

of jackets and reheaters, gives a higher performance than any other type of engine. Typical diagrams are given in Fig. 605,

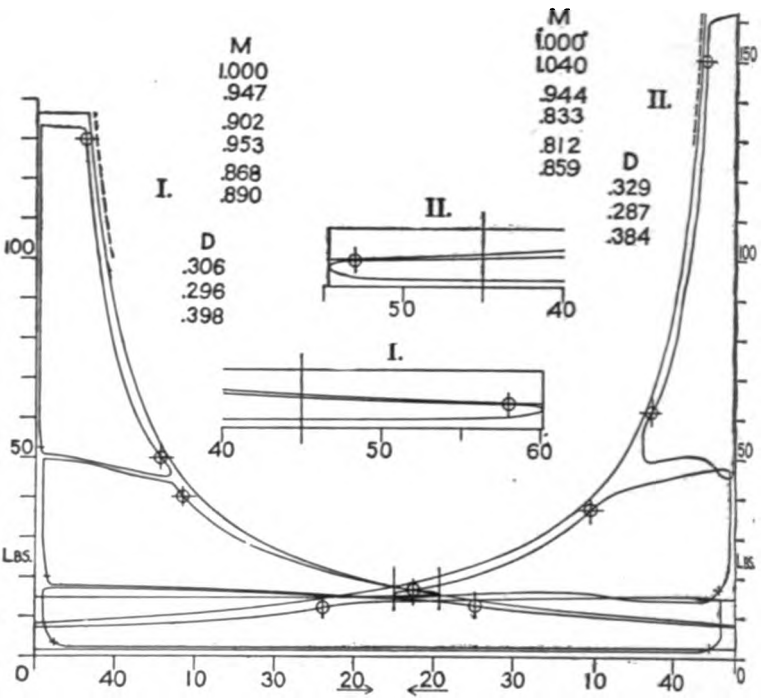

FIG. 605.—Two Vertical Triple-expansion Pumping Engines, reheaters, jackets.

I. Allis-Chalmers Engine at Milwaukee.
Test 353, March, 1893. R. H. Thurston, Trans. A.S.M.E., 15-313.

28	48	74	×60	$N = 20.31$	$V = 203$ $p_m = 26.4$
2–4	2–4	2–4	2.98	$H = 573.9$	$S_H = 11.80$
.014	.015	.0077	7.11	$J = 0.925$	

II. Snow Engine at Indianapolis.
Test 356, Dec., 1898. W. F. M. Goss, Trans. A.S.M.E., 21-793.

29	52	80	×60	$N = 21.18$	$V = 212$ $p_m = 24.4$
6	7	8	3.26	$H = 782.9$	$S_H = 11.50$
.017	.022	.025	7.66	$J = .062$	$I_{1C} = .805$ $I_{2R} = .930$

both from machines of the general form illustrated in Fig. [illegible]. These diagrams call for no comment, their [illegible] evident.

Digitized by Google

(*h*) AN ENGINE WITH A SPECIAL STEAM-CYCLE.—The engine whose performance is represented in Fig. 606 has a number of

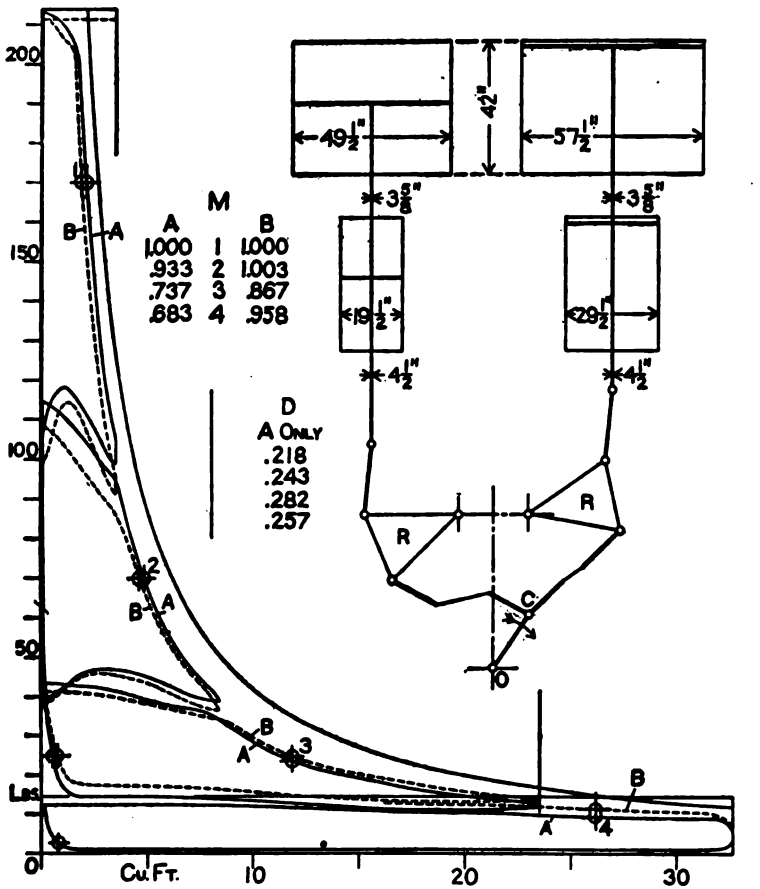

FIG. 606.—Nordberg Quadruple Pumping Engine at Pittsburg. Test 365, 1898. R. C. Carpenter, ENG. REC., April 22, 1899.

Ratios	2.267	6.721	9.076	$N=36.52$	$V=256$ $p_m=35.4$
Cl.	.0125	.0130	.0055	.0036	$H=712.2$ $S_H=12.42$

points of interest; but the chief is the form of the steam-cycle, which is, in effect, a close approximation to the Carnot cycle.

Digitized by Google

The essential requirement for maximum efficiency between certain limits of temperature is that all the heat received be taken in at the upper limit and that all the waste heat be rejected at the lower limit. For the other two phases of the cycle—the temperature-changing phases—the adiabatic operation is the most obvious, but not the only one available. Suppose that during the temperature-lowering or expansion phase some heat is abstracted from the working-medium, each small portion of heat being stored in a part of the apparatus, at the temperature at which it was abstracted; and that in the temperature-raising or compression phase this heat is returned at its proper temperature; then the cycle thus made up of two isothermals and two *isodiabatics* will be equivalent to the Carnot cycle, having the same efficiency:

$$E = \frac{T_1 - T_2}{T_1}.$$

In this Nordberg pumping engine, steam is taken from the expansion side of the cycle at a number of points, and used to heat the feed-water by successive steps. The water first passes through a surface heater in the exhaust-pipe, between the L.P. cylinder and the condenser; then it goes through a series of mixing heaters, being pumped from each lower one to the next one, in which there is a higher temperature and pressure. Steam for these heaters is taken from the exhaust-pipe, from the L.P. cylinder at release, from the third, the second, and the first receivers—the jacket and reheater drains being included in the steam and water thus abstracted: at the L.P. release the steam for the heater escapes from the cylinder through a small special valve which is opened for a little while near the end of the stroke. Then the boiler, instead of being obliged to heat the feed-water from the exhaust-temperature receives this water at a temperature near to that in the first receiver.

In comparing this engine with others which have the Rankine cycle for their limit, the steam-consumption in pounds ceases to be a fair basis, and the absolute efficiency, or the ratio of work done to heat used, must be found. This comparison is made in Chapter XIII.

Digitized by Google

It will be noted that any jacketed engine in which the jacket-water is either returned at full pressure to the boiler or mixed with the feed, so as to raise the latter above the exhaust-temperature, goes a little way from the Rankine cycle toward the form just described.

On Fig. 606 the diagrams got without the use of the special feed-heaters, but with all the jackets in service, are dotted in. These are laid out for the same power, or on the same base-lines, and are intended to show how the total expansion is modified by the successive abstractions of a part of the working steam. The full-line figures are drawn for one pound of total steam, the jacket consumption not being separately determined.

The mechanism consists of two triangular rockers and of two connecting-rods, with their stroke-lines at right angles, working on one crank. The effect of this, together with the grouping of the cylinders, is as if the four cylinders were in a row, with four cranks, each one at 90° with the one ahead of it. The characteristic action for this arrangement is quite strongly marked in the first two receivers.

(*i*) TRIPLE-EXPANSION POWER ENGINES, in regard to the amount of clearance and to the form of their diagram in such matters as pressure-loss and throttling effects, lie between the pumping engines as just illustrated and the marine engines which follow; and it has not been thought necessary to give any diagrams from this class. For both factory service and driving generators, triple engines are much more used in Europe than in America, the cost of coal being an important factor in determining whether the slightly more efficient but more costly machine will really be more economical in total charges: see also statements in § 70 (*b*), under Table 70 A.

(*j*) MARINE ENGINES.—Not many steam-consumption tests of marine engines have been made, although plenty of indicator cards and of coal-consumption tests are available. The triple engine, in the smaller sizes, is well represented by Fig. 607, both engines having three cylinders, with cranks at 120°. Comparing Fig. 607 with 605, we see that the effective volume at any pressure is less in the former, even when account is taken of the fact that

Digitized by Google

the marine diagrams are drawn for one pound of total steam, the pumping-engine diagrams for one pound of cylinder steam (not

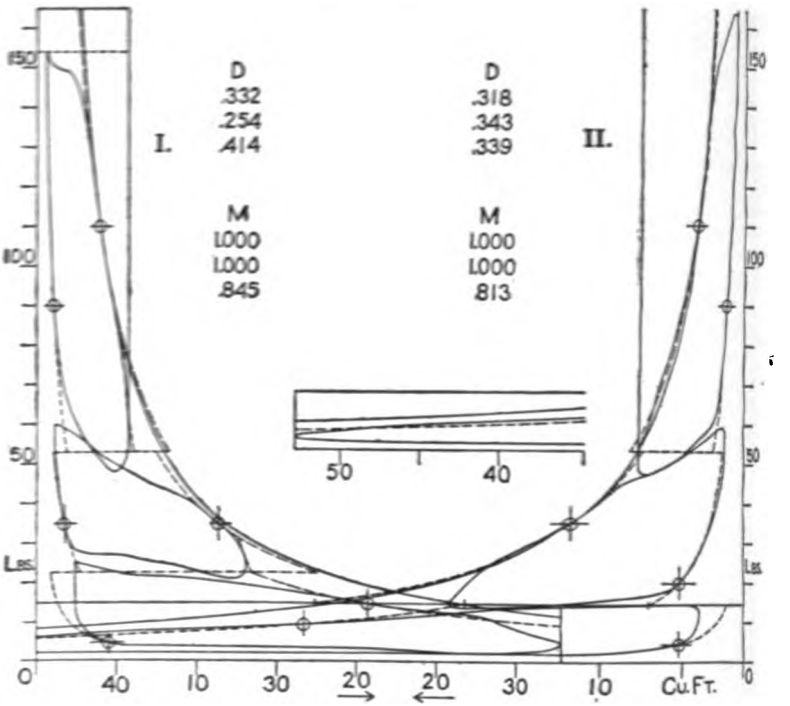

FIG. 607.—Triple-expansion Marine Engines. Tests by Committee of Inst. of Mech. Engs., A. B. W. Kennedy, Chairman.

I. S.S. *Meteor*. Test 382, June, 1888. ENG., 1889, I. 527.

29	44	70	×48	$N=71.78$ $V=574$ $p_m=29.9$
4¾–7	4¾–7	4¾–7	2.29	$H=1994$ $S_H=14.98$
.124	.093	.080	5.87	$I_1=.771$ $I_2=.753$ total.

II. S.S. *Iona*. Test 383, July, 1890. ENG., 1891, I. 568.

22	34	57	×39	$N=61.1$ $V=396$ $p_m=21.1$
5	5	5	2.46	$H=645.4$ $S_H=13.35$
.124	.101	.076	6.93	$J=.043$ $I=.634, .749, .591$ total.

I. Jackets on all cylinders. II. Only H.P. cylinder jacketed.

including jacket-feed). This greater thermal loss and the larger pressure-losses between the cylin[illegible]gether with the fact that

Digitized by Google

in most cases the expansion is much shorter,* account for the larger values of S_H given under Figs. 607 and 608. The *Meteor* engine had jackets on all the cylinders, though their steam-consumption was not separately determined; the *Iona* engine had only the H.P. cylinder jacketed; but in both there is the action characteristic of the non-jacketed engine, as shown by the large drop in the value of pv in the L.P. cylinder. In spite of its smaller size and somewhat greater thermal losses (apparent on the diagram), the second engine shows better economy because it has smaller receiver-drop losses and fuller expansion. These advantages are due to the earlier cut-offs and to the larger cylinder-ratio.

It will be noted that in the first two stages of both these diagrams the clearance-steam is just about enough in amount to throw the expansion-curves out to the one-pound saturation-curve: in other words, the clearance-steam is nearly equal to the missing quantity of working steam. The diagram from the *Meteor* is redrawn in Fig. 609 with the clearance-steam eliminated, and a rather clearer idea of effective performance can be got from that figure.

The engines in Fig. 608 all have the last stages divided between two L.P. cylinders; I. and II. have four cranks, arranged in pairs opposite each other at the ends, and with these pairs quartered (as in Case B, § 40 (*k*)), but with the angles modified from 180° and 90°; III. has five cranks. Diagram I. represents the warship engine, which is under requirements similar to those imposed upon the locomotive, in that a large power-development is demanded in proportion to the size of the machine. The striking characteristics are high initial pressure and short expansion or high terminal pressure: and a further noteworthy point is the large gap between stages 2 and 3, with the marked collapse of steam-volume in the last stage. The diagram was made from indicator cards which had been reduced to small size for publication, so that there is room for some error in the scaling; but that this error cannot be very large is shown by the fitting together of the indicator cards in the upper part of the figure, by the close

* By short expansion is here meant not a small ratio of expansion, but a small absolute volume of the pound of steam when it is exhausted.

Digitized by Google

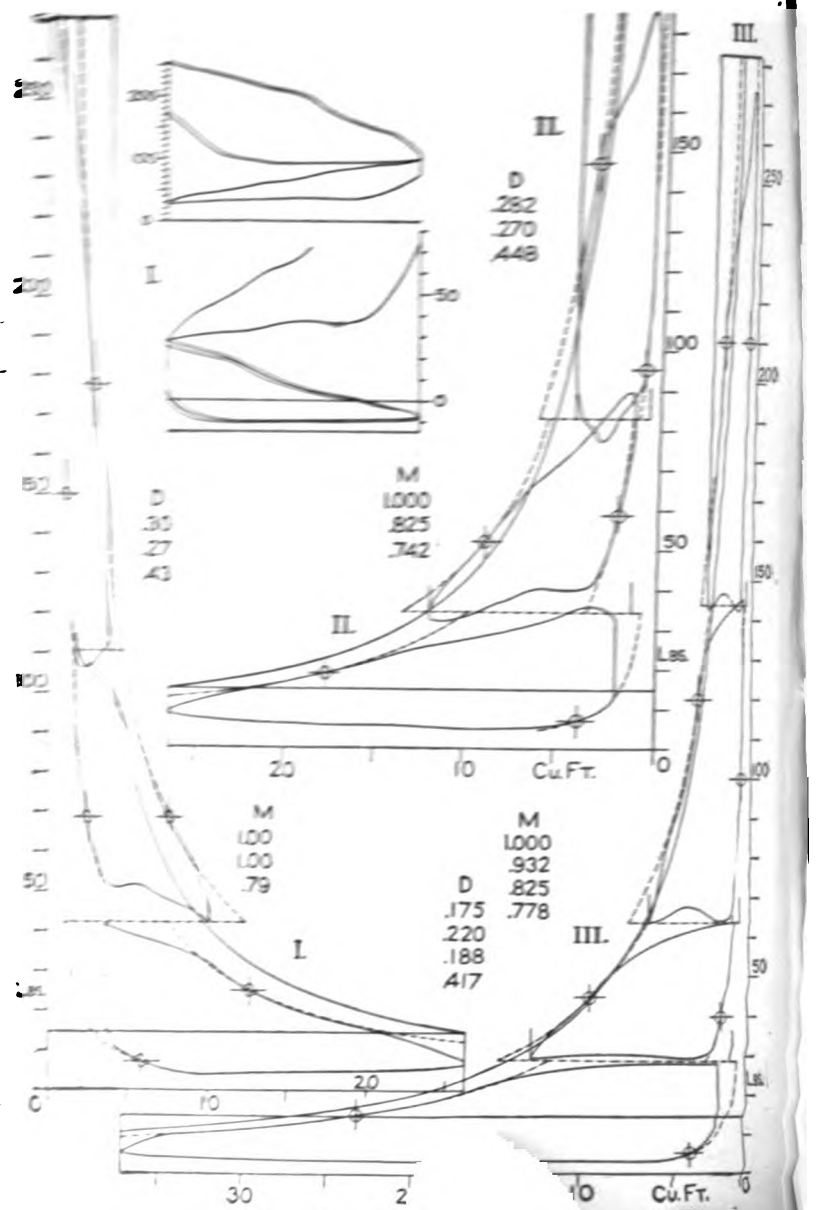

FIG. 608.—Mai

Digitized by Google

agreement of the hyperbola with the L.P. expansion-curve, and by the confirmatory results in diagram II. It is hard to see, however, why there should be so great a drop of pressure between these two stages. The two L.P. indicator cards, each a mean for its cylinder, are sketched together to show how nearly they agree: in the combined diagram their average is used, the whole diagram being drawn as the mean for the two engines, or from four sets of cards. The engines have jackets, but they were not in service when these diagrams were taken. In general, the economy was better without the jackets.

In Fig. 608 II. the diagrams are accurate, but the steam-consumption is only assumed at a probable value: the volume-scale corresponds with 15 lbs. per horse-power-hour, and the resulting position of the saturation-curve is about what should be expected in view of the size and speed of the engines. These have jackets, but they are not usually filled with steam when the engine is running, being rather used for warming the cylinders before starting. As in engine I., there is a decidedly poor vacuum realized in the cylinder: but with such short expansion high vacuum does not add much to the performance of the engine.

Fig. 608 III. shows an action in which there is evidence of a strong and successful effort after economy. The steam is superheated about 80 degrees, besides being made at a very high pressure;

FIG. 608—(*Continued*).

I. H.M. Cruiser *Argonaut*. Sir John Durston, paper before Inst. Nav. Arch. Test 385. ENG., 1899, I. 391, 432.

Two	34	55	64–64	×48	$N=115.3$	$V=922$ $p_m=38.3$
	5½	5½	5½	2.685	$H=13,788$	$S_H=15.44$
	.24	.20	.16	7.155		

II. S.S. *Kaiser Wilhelm der Grosse*. ENG., 1898, I. 649.

Two	51.9	89.8	96.5–96.5	×68.9	2.98	$N=78$ $V=896$
	.16	.12	.08		6.98	$p_m=37.4$ $H=29,150$

III. S.S. *Inchdune*, five-cylinder quadruple. ENG., 1901, I. 71.

	17	24	34	42–42	×42	$N=73$ $V=511$
Cl.	.20	.13	.11	.06		$p_m=35.2$ $H=1627$
Ratios		2.00	4.00	6.12		

Steam-consumption not determined in last two; estimated at 15 lbs. in II., at 11 lbs. in III.

Digitized by Google

the cylinders are fully jacketed, and the receivers have reheaters; the expansion is quite full; and the vacuum is good. The only data as to economy is the statement that a long run was made of 0.97 lb. of coal per H.P.H. This appears to be a little too good, but the assumption of 11 lbs. of steam per H.P.H. cannot be far out of the way.

(*k*) THE DISTRIBUTION OF THE LOSSES in a multiple-expansion engine is well illustrated by Fig. 609, which is given chiefly with the idea of collecting into concise form some ideas brought out in the preceding discussion. Diagrams from the S.S. *Meteor*, Fig. 607, I., are redrawn with the compression-curves brought to the pressure-axis, so as to eliminate the clearance-steam. Curve A is the saturation or constant-weight curve for one pound of steam, used as a reference-line in all the combined diagrams which have just been given. Curve B is the adiabatic, starting with one pound of dry steam at boiler-pressure, and running out to a terminal pressure the same as that which the actual L.P. expansion-curve would have if produced to the end of its diagram. On each expansion-curve is drawn a hyperbola, marked C, D, and E respectively. Then losses due to shrinkage of volume on account of cylinder condensation (with leakage included as a partial cause) are shown by one direction of cross-hatching, losses due to throttling or to free expansion are grouped together and shown by the opposite cross-hatching. There will be some minor points where such a division will appear more or less arbitrary, the exact interpretation being open to dispute. The idea of the little extension at F is that if the full adiabatic volume were realized, the steam would fill a larger space when at the exhaust-pressure. The adiabatic is really the proper reference-curve when considering the thermodynamic performance, but for ordinary purposes the saturation-curve is rather more useful, since it enables us to see the condition of the steam in the cylinder.

(*l*) THE DIAGRAM FACTOR.—For the purpose of *determining* the approximate size of the L.P. cylinder of an engine which is to develop a certain power, it is con[illegible] be able to estimate roughly, by a simple computation [illegible] reduced M.E.P. P_m is likely to be. One way i[illegible]

Digitized by Google

engines, of the "coefficient of fullness" or diagram factor, this being the ratio of the effective area of the combined diagrams to a simple circumscribing diagram with the ($pv=C$)-line for its expansion-curve.

One method is to take the ordinary combined diagram, with the clearance-line as vertical axis, and draw the hyperbola to touch

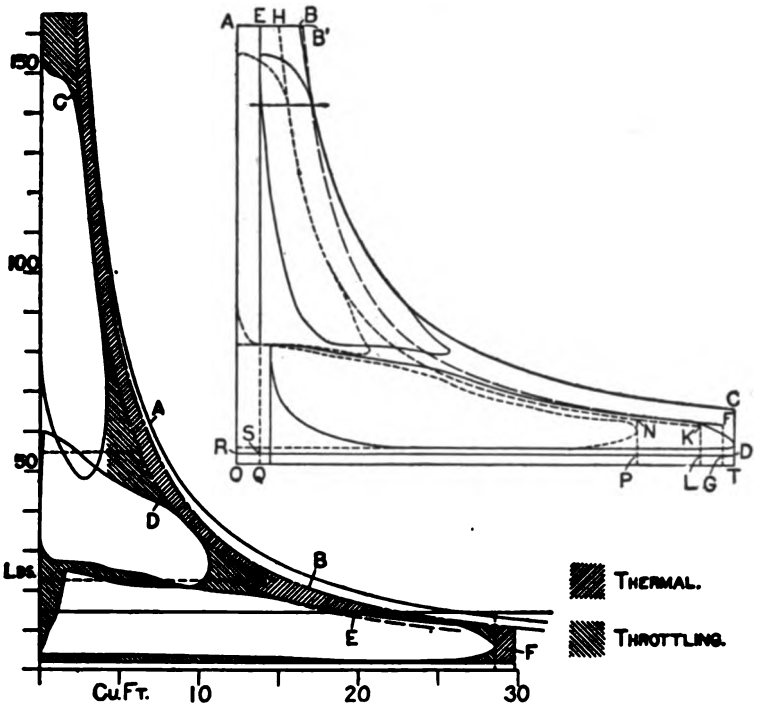

FIG. 609.—Diagrams from S.S. *Meteor*, referred to compression-curves.

FIG. 610.—To Illustrate the Diagram Factor.

the H.P. expansion-curve at cut-off, extending it from the boiler-pressure to the end of the L.P. diagram. In Fig. 610 this makes ABCDR the ideal figure, though some engineers have used the base-line OT instead of the condenser-pressure line RD as the bottom of the diagram. Using RD, the area of the indicator diagrams is 57.2 per cent. of the area of ABCDR. Busley, in his

Digitized by Google

The Marine Steam-engine (original in German), gives a collection of factors which lie in the neighborhood of 0.67, ranging from 0.60 to 0.75 for various classes of marine engines.

The really logical scheme is to transfer the diagrams into the dotted position, and make the compression-curves agree with the axis AO (as in Fig. 609); then the hyperbola HN is drawn, with O as origin, and the effective combined area is compared with AHNPR, coming here to 84.7 per cent. But this involves too much graphical work and changes the lengths of the respective diagrams to something else than the actual cylinder-volumes (as laid off to scale).

For convenient practical use the best method is simply to bring the several end-lines to a common axis, as would be done if the L.P. diagram were moved a little way to the left in Fig. 610, so as to touch EQ. Then with Q as origin the hyperbola B′F is drawn, to touch the H.P. expansion-curve at a point on a horizontal line through the upper end of the compression-curve—this making the diagram QEB′F have the same width, at any pressure, as OAHN. The length SG is the same as that of the L.P. diagram, representing, as is proper, the volume of the large cylinder. With this area EB′FGS as standard, the factor is 0.806. The area or the mean pressure of any of these simple ideal diagrams can easily be calculated as in § 17 (*c*), with Table I. to diminish the arithmetical work involved.

Variation in the standard used by different writers makes the diagram-factor method less useful than it might be. Even for the roughest preliminary work it is better to sketch out the diagram and measure it.

(*m*) THE SINGLE-ACTING TANDEM-COMPOUND ENGINE.—To complete this subject of compound-engine diagrams, we must take note of the peculiar action which is introduced when a single-acting compound engine is changed from the Westinghouse form (Fig. 255) to the Willans form (Fig. 439). To prevent a great variation in the pressure on the under side of the higher piston, it is natural to use the variable space between this piston and the next cylinder-head as the receiver; but since the varying pressure in the receiver acts on a moving surface, it is necessary to take an indicator card from the receiver, and find what work is done upon

Digitized by Google

the "wrong side" of the piston. A typical combined diagram from a two-stage Willans engine is reproduced in Fig. 611. Referring to Fig. 439, we see that on the up- or exhaust-stroke the combined volume of cylinder C_1 and receiver R is constant, so that, barring secondary influences, the steam-pressure throughout this space will be constant, as shown by the horizontal line between diagrams C_1 and R in Fig. 611. During the down-stroke the receiver pressure drops till L.P. cut-off, then is raised by compression: so that on the lower side of the H.P. piston is done the work represented by the area of diagram R. In any ordinary direct-expansion engine, with receiver of constant volume, the separate areas C_1 and R are combined in a single figure.

Somewhat more complex in its action is the Schmidt "motor" represented in Fig. 612. On the down-stroke, steam is admitted

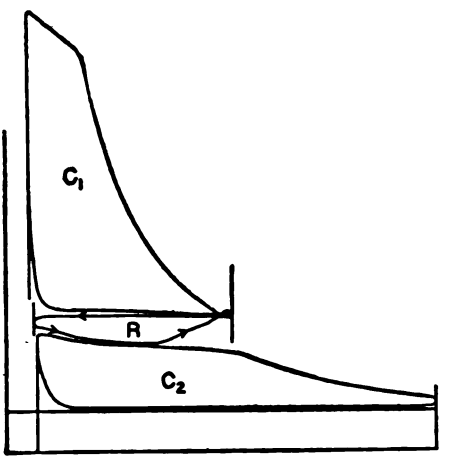

FIG. 611.—Diagrams from Compound Willans Engine.

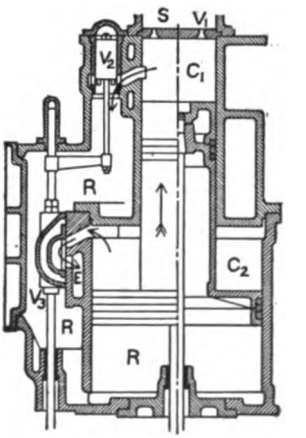

FIG. 612.—Section of Schmidt "Motor" for Superheated Steam.

to C_1 through the annular port in the cylinder-head, controlled by a lift valve V_1, and V_3 is open, admitting steam to C_2, and equalizing the pressure in R and C_2; but the communicating volume decreases, because the H.P. piston advances into it, and the receiver-pressure rises. On the up-stroke C_1 is open to R,

Digitized by Google

and the receiver-pressure falls on account of a volume-increase due to the displacement of the annular excess of the large piston over the small one. Still, the receiver-pressure is greater than the L.P. exhaust-pressure, so that there is an effective driving-force, approximately equal to that in the down-stroke. This engine has what are essentially single-acting pistons, and yet through the effect of the receiver gets the force-play of a double-acting engine. The M.E.P. of the receiver diagram will be considered as acting upon the full bottom area of the piston when calculating work or power: but when the diagrams are to be combined it is better to "reduce" this diagram to a shorter length or smaller volume, increasing the ordinates as the base-line is shortened—as suggested by Professor Doerfel in *Zeitschrift des Vereins deutscher Ingenieure*, 1899, page 1562. The result looks very much like Fig. 611.

§ 70. Cylinder Proportions in Practice.

(*a*) RANGE OF DATA.—Numerous examples of compound-engine dimensions will be found scattered through Chapter VIII., set forth under the diagrams in the last section, and especially gathered together in the Test Tables in Chapter XIII. Besides these, and for the better presentation of certain phases of the subject, the tables in this section have been compiled.

The two-stage engine is so fully and widely covered by Table 75 B and C that very little need be added here: in Table 70 A the first group, Nos. 1 to 7, is made up of engines with very low cylinder-ratios; while Nos. 8 to 10 are intended to show the range of proportions in compound marine engines, supplementing Tests 371 to 374. Table 70 B gives a set of representative examples of multiple-expansion power and pumping engines, with extreme values of the total ratio in the first and last cases. these are mostly repeated from Tables 75 C and D, but there is here room for a fuller analysis of the relations between the successive stages. The field of marine engineering is sufficiently covered by Table 70 C.

THE COMPOUND ENGINE.—The lowest ratio of which the writer has knowledge is found in some small electric-light engines for use on British warships, with cylinders 16 and 20 by 8, the ratio being 1 to 6.4: while working on a very high boiler-pressure,

Digitized by Google

this engine exhausts at high pressure into the second receiver of the main engine or into the evaporator. For engines with normal exhaust,* the ratio 2.0 is about the limit. Example No. 1, Table 70 A, is an extreme case for a non-reversing engine. If the engine is to start frequently, as Nos. 2 and 3, the use of a very large H.P. cylinder is desirable, because a strong initial torque is thereby secured. Compound winding (hoisting) engines are not very common, but the use of two stages in a reversing rolling-mill engine (No. 3) is decidedly unusual. The designation 2-crank or 3-crank in these cases means that there are two or three tandem-compound units.

The compound locomotive, running always non-condensing and often with a back-pressure well above atmosphere, has a low cylinder-ratio, in spite of its high boiler-pressure. The example in Table 75 B vary from 2.35 to 2.8, and cover the range of practice very fairly. The small stationary high-speed engine, represented by Figs. 202, 203, 206, and 208, has about the same range: but if the engine is to be run condensing at times a slightly higher ratio is desirable, as in Test 216. An unusually low ratio is seen in Fig. 612, and the same condition is indicated by the high values of p_m in Tests 224 and 225.

For the larger condensing engine we see one line of practice in Nos. 4 to 7 of Table 70 A and in Tests 281 to 285, with the ratio from 2.3 to 3.0; another line in Tests 241–4 and 251–9, where the ratio ranges from 3.3 to 4.5. The evident belief that the individual cylinder-ratios must be small will account for the much more general use of the triple-expansion engine for ordinary power service on the Continent of Europe than in England and especially in America. With us the idea has been rather to get the full amount of expansion out of each cylinder and to use fewer stages.

This idea receives its fullest development in the Rockwood type of high-ratio compound, already commented upon in § 69 (*f*), and with the performance set forth in Tests 271–4. This scheme runs into the triple engine field as to proportions, and under comparable conditions gives nearly if not quite as good economy.

* The engines in the tables here given are all to be run condensing except No 3

Digitized by Google

TABLE 70 A — COMPOUND ENGINE DATA

No.	Maker Reference	Type Service	Dimensions Stroke	Steam	[illegible]	[illegible]	[illegible]
1	Duisberger Mach. Co. Eng. 1902, II. 537	Hor. tand. lift valve Roll. mill, non rev	20 A 41 C 43 S	0 180	180	180	1000
2	Gutehoffnungs Hütte Eng. 1902, I. 813	Hor. 2-ck. tand. lift Mine hoist	33 A 42 0 78 S	0 180	114	96	400
3	Cockerill, Ghent Eng. 1905, II. 376	Hor. 3-ck. tand. lift Roll. mill reversing	33 4 33 0 51 0	0 0[illegible]	114 43 A	180	1000
4	Carels Frères, Ghent Eng. 1900, II. 79	Hor. tand. lift-valve Generator	20 0 41 3 43 0	0 A0	180 30 0	180	600
5	Bollinckx, Brussels Eng. 1900, II. 368	Hor. 2-ck. Corliss Generator	27 0 43 3 50 0	0 [illegible]0	113 30 1	80	1000
6	Escher, Wyss & Co. Eng. 1900, II. 296	Hor. tandem Corliss Generator	25 0 43 3 47 0	3 180	140 30 0	110	800
7	Grevenboich Eng. 1903, I. 40	Hor. 2-ck. tand. lift Generator	28 A 43 3 51 0	0 33	140 30 0	70	800
8	Denny, Dumbarton Eng. 1891, I. 40	Inclined 2-crank Paddle steamer	50 104 72	3 10	150		
9	Ansaldo, Genoa Eng. 1896, I. 342	Vert. 4-ck. (duplex) Battleship, 2-screw	47 80 51	3 A0	180 90 0	180	800
10	Maryland Steel Co. Mar. Eng., Jan. 1905	Vert. 4-ck. (duplex) Ferryboat, 1 eng.	22 A 80 30	4 180	900		

REFERENCES – in this and the following tables:

A. S. M. E. *Trans. Am. Soc. M. E.*, Vol. page.
ENG. *Engineering*, London.
ENG. REC. *Engineering Record*, New York.
MAR. ENG. *Marine Engineering*, New York.
Z. V. D. I. *Zeitschrift des Vereins deutscher Ingenieure*

SYMBOLS:

P = [illegible] pressure by gages
P = [illegible] piston
A = [illegible]
H = [illegible]

Digitized by Google

TABLE 70 B. MULTIPLE-EXPANSION ENGINES.

No.	TYPE REFERENCE	DIAMETERS SERVICE STROKE	RATIOS	$\frac{p_{IG}}{p_m}$	$\frac{N}{H}$ $\frac{V}{}$
11	Vert. 3-ck. lift-valve	32.7, 55.1, 80.7	2.83 **6.10**	171	94 740
	ENG. 1902, II. 179	Generator 47.2	2.13	26.2	3000
12	Vert. 2-ck. lift-valve	34.0, 49.1, 61.0–61.0	2.08 **6.40**	200	83 700
	Z. V. D. I. 1900, 606	Generator 51.2	(T 316) 3.08	25.0	3000
13	Vert. 2-ck. Corliss	11.5, 19, 30	2.73 **6.79**	120	75 450
	ENG. 1896, I. 129	Generator 36	(T 302) 2.48	26 5	225
14	Vert. 4-ck. Corliss	37, 59, 72–72	2.54 **7.58**	190	75 750
	ENG. 1905, I. 539	Generator 60	2.98	32.0	6000
15	Hor. 2-ck. Corliss	26, 40, 60, 70	2.37, 5.32, **7.25**	180	60 720
	ENG. 1893, II. 694	Generator 72	2.25, 1.36	35.9	3000
16	Vert. 3-ck. Cor. and lift	28, 48, 74	3.15 **6.99**	120	20 200
	ENG. REC., Dec. 2, 1893	Pump. eng. 60	(T 353) 2.38	22	575
17	Vert. 3-ck. Cor. and lift	22, 41.5, 62	3.56 **7.95**	150	25 250
	ENG. REC., Nov. 16, 1901	Pump. eng. 60	(T 357) 2.23	21	475
18	Vert. 3-ck. Cor. and lift	30, 56, 87	3.48 **8.40**	190	18 200
	ENG. REC., Oct. 13, 1900	Pump. eng. 66	(T 358) 2.41	23	800
19	See Fig. 606 (T 365)	19.5, 29, 49.5, 57.5	2.21, 6.44, **8.70**	200	36 250
	ENG. REC., Apr. 29, 1899	Pump. eng. 42	2.92, 1.35	35	700
20	Horiz. 4-ck. (T 366)	14.5, 22, 38, 54	2.30, 6.86, **13.92**	240	57 460
	A. S. M. E., 28 –	Air-comp. 48	2.98, 2.03	31	1000

Numbers like (T 316), etc., refer to Test Tables in Chapter XIII.

RATIOS:

First line = ratio of each successive cylinder (or stage) to the first or high-pressure cylinder.
Second line = ratio of each cylinder (after the second) to the one ahead of it.

These are all for the nominal volumes or piston-displacements (not considering the clearances), and do not include the effect of the piston-rods.

Digitized by Google

TABLE 70 C. MARINE ENGINES.

No.	VESSEL REFERENCE	DIAMETERS ENGINES	STROKE	RATIOS		p_{IG} / p_m	N	H	V
21	INDIANA U. S. B. S.	34.5,	48, 75	1.93	4.73	150	131		917
	Fig. 234	Two	42		2.44	38.9		9500	
22	MINNEAPOLIS U. S. CR.	42,	59, 92	1.98	4.80	150	132		925
	ENG. 1894, II. 563	THREE	42		2.42	55.0		20,400	
23	MAGNIFICENT BR. B. S.	40,	59, 88	2.18	4.85	155			
	ENG. 1895, I. 485	Two	51		2.22			12,000	
24	OCEAN BR. B. S.	30,	49, 80	2.67	7.10	250	108		918
	ENG. 1899, II. 152	Two	51		2.66	48.4		13,500	
25	GOOD HOPE BR. B. S.	43.5,	71, 81.5–81.5	2.67	7.04	278	125		1000
	ENG. 1902, I. 286	Two	48		2.64	49.1		31,000	
26	DEVONSHIRE BR. CR.	41.5,	65.5, 73.5–73.5	2.49	6.27	200	140		980
	ENG. 1905, I. 550	Two	42		2.52	42.7		21,500	
27	OHIO U. S. B. S.	35.5,	53, 63–63	2.23	6.28	210	124		992
	MAR. ENG., Sept., 1904	Two	48		2.82	42.8		16,000	
28	VIRGINIA U. S. B. S.	35,	57, 66–66	2.65	7.11	250	120		960
	MAR. ENG., June, 1904	Two	48		2.68	47.9		19,000	
29	MARYLAND U. S. CR.	38.5,	63.5, 74–74	2.72	7.39	250	128.5		1028
	MAR. ENG., March, 1905	Two	48		2.72	51.5		27,600	
30	U. S. SCOUT CRUISERS	28,	45, 62–62	2.49	9.63	250	200		1200
	MAR. ENG., June, 1905	Two	36		3.80	36.5		16,000	

Digitized by Google

TABLE 70 C—*Continued.*

No.	Vessel Reference	Diameters Engines	Stroke	Ratios	$\frac{p_{IG}}{p_m}$	$\frac{N}{H}$	V
31	New York 1887	45, 71,	113	2.48 6.29	150		
	Eng., 1888, II. 123	Two	60	2.53		20,000	
32	New York 1902	42, 66.5,	77–77	2.51 6.72		95	950
	Mar. Eng., May, 1903	Two	60	2.68	37.4	20,000	
33	Campania 1892	37–37, 79,	98–98	2.28 7.02	165	84	966
	Eng. 1893, I. 480	Two	69	3.08	34.0	30,000	
34	St. Louis 1894	28.5 } 55, 77,	{ 77	1.86, 3.65, 7.30	200	95	950
	Eng. 1895, I. 800	28.5 } 60	{ 77	1.96, 2.00	37.4	20,000	
35	Kr. Wilhelm d. Gr. 1897	52, 89.7,	96.4–96.4	2.97 6.86	178	78	893
	Eng. 1898, I. 429	Two	68.6	2.31	38.0	30,000	
36	Oceanic 1899	47.5, 79,	93–93	2.76 7.66	192		
	Eng. 1899, I. 53	Two	72	2.80		27,000	
37	Deutschland 1900	36.6 } 73.6, 103.9	{ 106.3	2.05, 3.91, 8.52	220	77	935
	Eng. 1900, I., II.	36.6 } 72.8	{ 106.3	1.91, 2.18	36.2	36,000	
38	Ivernia 1900	28, 41,	58½, 84	2.14, 4.33, 9.00	210		
	Eng. 1900, II. 436	Two	54	2.02, 2.08			
39	Kaiser Wilhelm II. 1902	37.4, 49.2, 74.8,	112.2	1.71, 4.01, 9.00	225	80	945
	Eng. 1903, II. 37–	Four	70.9	2.35, 2.24	35.9	40,000	
40	Minnesota 1902	29, 51,	89	3.08 9.42	230	78	702
	Mar. Eng., May, 1903	Two	54	3.06	37.8	10,000	

Digitized by Google

(*c*) THE MULTIPLE-EXPANSION ENGINE.—Glancing over Tables B and C, with the latter part of 75 C and with 75 D, we note first of all the natural and obvious increase in the cylinder-ratios with rising steam-pressure, and also the tendency to higher ratios in American and English than in German stationary practice. It appears that the usual range in modern designs is from 6 to 8.5, with 9 as an advanced proportion. The last example in Table 70 B is decidedly a special case. In regard to both Nos. 19 and 20, with the system of working described in § 69 (*h*), it is to be remarked that, on account of the diminution of steam-weight during expansion, the cylinder-ratio is relatively even higher than the numerical values would indicate.

In considering the matter of the component or successive ratios, we wish to see, roughly at least, how the conclusions of simple theory are modified by secondary actions. Normally the last stage has relatively a much larger drop from the pressure at the end of expansion to the exhaust-pressure than has any of the other stages: consequently, this cylinder should have a later cut-off, and a smaller ratio to its upper neighbor. This condition shows up very clearly in the pumping engines, Nos. 16, 17, 18, where the secondary influences are small, and is less marked on No. 11; it appears also in the quadruples, Nos. 15, 19, and 20. But in the marine engines, on account of the greater effects of clearance and of intermediate losses, and because the mechanical requirement of nearly the same cut-off in all the cylinders involves a progressive increase in the proportion of exhaust- or receiver-drop, the ratios become practically equal as in Nos. 23, 24, 31, 34, 38, and 40; while the peculiar condition of the reversal of the normal manner of progression is seen in Nos. 21, 22, and 33.

When a stage in the expansion is divided between two cylinders of which each is a work-unit, then that stage must have a larger total volume. The usual case is the four-cylinder triple, and here the low-pressure ratio should be the larger, as in Nos. 12, 14, 27, 30, and 32; when it is equal, as in Nos. 25, 26, 28, 29, and 36 (all recent designs), we see the evident effect of influences which were perhaps not fully taken into account when the earlier engines were laid out. A close and extensive study of actual indicator

Digitized by Google

diagrams would be necessary to make clear just what these influences are, going beyond the scope of the present discussion. Note that No. 13 (see Fig. 613 III.) is essentially the same as a four-cylinder triple in regard to work-division.

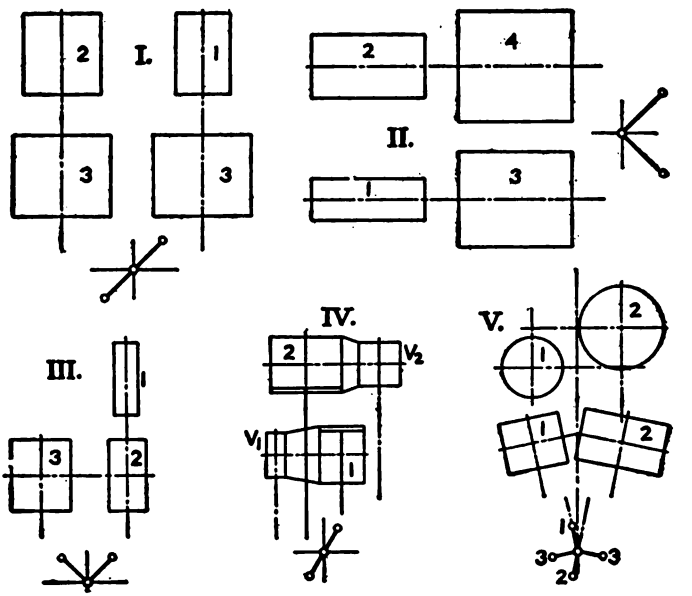

FIG. 613.—Special Arrangements.

I. Triple Sulzer Generator-engine, Berlin, 1899; No. 12, Table 70 B.
II. Quadruple Allis Engine, Chicago Exposition, 1893; No. 15.
III. Two-crank Triple, Fraser & Chalmers, 1894; No. 13.
IV. Collman Balanced Engine, Vienna, 1894; 22.1, 35.4×27.1.
V. Torpedo Boat *Daring*, Thorneycroft, 1894; 19, 27, 27–27×16.

An inspection of the sketches in Figs. 613 and 614 will show that the special arrangements in engines 33, 34, and 37 call for equal-work stages, while in Nos. 13 and 39 the first two stages should be smaller, since they are combined on one crank.

(*d*) VARIOUS CYLINDER-ARRANGEMENTS.—The obvious arrangement for an engine having more than two cylinders, especially if

Digitized by Google

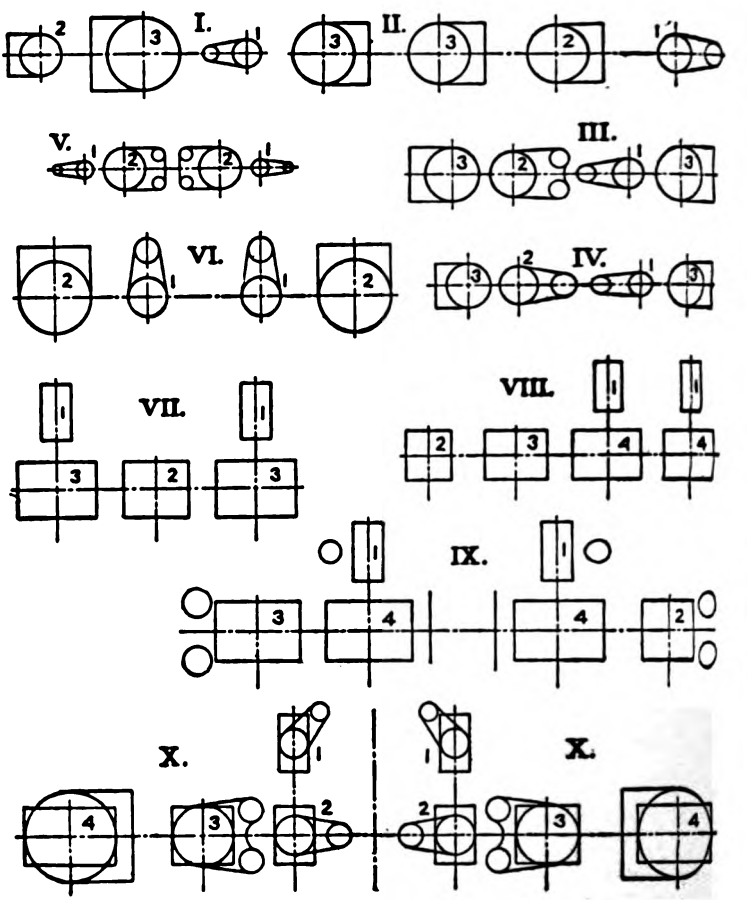

FIG. 614.—Marine Engines.

I. Pacific S.S. *Minnesota*, 1902; No. 40, Table 70 C; 29, 51, 89×54.
II. British Cruiser *Powerful*, 1896; 45, 70, 76–76×48.
III. U. S. Battleship *Virginia*, 1904; 35, 57, 66–66×48.
IV. British B. S. *Triumph*, 2d class, 1903; 29, 47, 54–54×39; see Fig. 244.
V. Ferryboat, 1904, No. 10; duplex 22.5, 50×30.
VI. Italian B. S. *Silicia*, 1895, No. 9; duplex 47, 89×51.
VII. Steamers *Campania*, *Lucania*, 1892, No. 33.
VIII. Steamers *St. Paul*, *St. Louis*, 1893, No. 24.

Digitized by Google

each contains a stage of the expansion, is to put them in a row in sequence, as in Figs. 229, 230, 234, and 259. For the sake of compactness, however, and to diminish the amount of mechanism required, the tandem is often combined with the side-by-side arrangement, as in Figs. 613 I., II., and III. (and in Fig. 606); I. and III. are typical schemes for a triple engine, the first being the more symmetrical. Fig. 613 II. represents a tendency which reached its height at about the time that engine was built; a little experience showed that there was no economic justification for quadruple expansion in stationary service. The last two diagrams in Fig. 613 show a scheme for making the engine self-balanced, by crowding close together the axes of two cylinders which work on cranks that are opposite (or effectively so).

Of the marine-engine arrangements in Fig. 614 I. shows an exception to sequence order in a three-crank engine, while II. is an example of plain sequence in a four-crank triple. Largely from considerations of balancing, the latter very common type of engine is now nearly always built in the form shown at III. and IV., with two closely-spaced groups and with the low-pressure cylinders outside.

One of the last large compound engines built for a sea-going ship is represented at VI., with a recent example of the same type for ferryboat service at V.; the former has the Joy valve-gear, which accounts for the unusual position of the valves. For paddle-wheels the plain quarter-crank compound is very common, with the cylinders at the bottom and the shaft at the top of an incline. When compound engines were standard practice for screw-engines they were often made with three cylinders and cranks, the H.P. between the two L.P's.

The last four sketches in Fig. 614 show rather special arrangements developed for large passenger steamers. Numbers VII., VIII., and IX. all embody the idea of dividing the last stage in order to avoid the use of excessively large cylinders, and then

---

FIG. 614—*Title continued.*

IX. Steamer *Deutschland*, 1900, No. 37.
X. Steamer *Kaiser Wilhelm II.*, 1902, No. 39.

Digitized by Google

dividing the first stage also, that the work-units may be equal. No. X. is like Fig. 613 III. in calling for smaller work-values of the first stages if the cranks are to receive equal powers.

All the diagrams in Fig. 614 are drawn to the same scale, and all but VII. and VIII. show the true spacing of cylinders and valves, thus giving an idea of the relative space needed by the various engines.

Digitized by Google

CHAPTER XII.

THE STEAM-TURBINE.

§ 71. General Form and Action of the Turbine.

(*a*) STEAM-ACTION IN THE ENGINE AND IN THE TURBINE.—In the ordinary pressure-engine, the elastic force of steam is directly applied to the doing of useful work, through its action upon a moving surface in constrained expansion. When the confining reaction of the working element (the piston) thus balances the internal stress in the steam, we have what may properly be called a static-pressure cycle.

In the turbine, there is first the operation of transforming pressure-energy into kinetic energy of the jet, through free expansion—that is, expansion in which the internal pressure acts to accelerate the steam, instead of being held in equilibrium by a confining force. Then, the jet having been formed, its kinetic energy is applied to the work of driving the rotor, by means of dynamic pressure upon moving vanes.* The first part of the process is predominantly thermodynamic, the second chiefly mechanical; and the whole constitutes a dynamic-force cycle.

The conditions which give maximum thermodynamic efficiency, for both types of machine, are set forth in §§ 14 to 16 and in § 24. The ideally perfect Carnot cycle having been modified by the omission of adiabatic compression up to the higher temperature, the resulting Rankine cycle (called Cycle B in § 16) is then the limit of effective performance, either in work upon the piston or in acceleration of the steam.

* In the reaction turbine these two operations are, in part, simultaneous; but that fact does not weaken the logic of putting them in sequence as parts of the energy-transformation process.

Digitized by Google

With the losses of effect in the engine the reader is familiar—these losses being due to free expansion and to secondary thermal interchanges within the cylinder. The first cause covers all work wasted in moving the steam, or thrown away when steam is released above the exhaust-pressure; the second is what produces cylinder-condensation, which is, of course, the line along which actual departs most widely from ideal performance.

The simplest theory of the turbine is based upon the ideal requirements that the operation of jet-formation shall be truly adiabatic and frictionless and that in the process of energy-absorption no work shall be lost in friction or in eddy-currents. Thus at first to ignore secondary actions leads most easily to the development and understanding of the fundamental general principles; and thereafter it is comparatively easy to introduce modifications which shall represent the influences that must be determined by special experiment.

In the actual turbine, harmful secondary actions of a purely thermal nature are relatively insignificant; but against this great gain over the engine must be placed the large losses by fluid friction and in wasted movements of the steam-current. The effect of these is to change potentially effective mechanical energy back to heat at lower temperature, in which state most if not all of it must be rejected in the exhaust. On the whole, it is safe to say that the total steam-cycle losses in turbine and in engine are very much in the same class as to magnitude, with perhaps some advantage for the turbine in the possibility of producing and maintaining high efficiency with less resort to special expedients.

Numerical data in regard to this matter will be found in Chapter XIII.

(*b*) CLASSIFICATION OF STEAM-TURBINES.—This is to be based chiefly upon differences in the manner of generating and utilizing steam-velocity, these differences being really more essential than are the resulting variations in form and construction.

Operation in Stages.—A matter of prime importance is the speed of the rotor of the turbine, both peripheral and rotary. To utilize effectively and safely the very high velocity with which steam issues from the nozzle is always a major problem. One way

Digitized by Google

of meeting this difficulty is to diminish the steam-velocity, by dividing the expansion or pressure-drop into a number of steps or stages, quite closely analogous to those in a multiple-expansion engine, but likely to be much more numerous. The other scheme is to divide the energy-absorption process into several stages, by causing the fully formed jet to impinge upon two or more sets of moving vanes in succession. The terms "pressure-stage" and "velocity-stage" are rather awkward for continual use: to get shorter words we shall let "stage" stand for pressure-stage, and speak of one or more "impulses" instead of velocity-stages. The latter usage is further recommended by the fact that only in what are called impulse turbines can the energy from a given nozzle (or group of nozzles) be absorbed in portions.*

Impulse and Reaction Turbines.—Another important distinction depends upon the question whether velocity-generation takes place wholly within the fixed nozzles, or whether it is also combined with the function of absorption in the moving element. The impulse turbine, just mentioned, has these two functions kept separate: then between any two successive distributors or sets of nozzles the steam is under uniform pressure, and the current has practically the same relative linear velocity at entering and at leaving any set of moving vanes. In the reaction turbine, on the other hand, pressure-drop and acceleration take place in the moving element as well as in the fixed element, so that the steam leaves the vanes with a higher relative velocity than it had at entrance. The terms "impulse" and "reaction" will be more closely defined in § 72, with some discussion as to how near they come to being truly descriptive when thus applied to steam turbines.

In the matter of general steam-action, then, we have the major classes of impulse and reaction turbines; and in the first class we must further distinguish between the cases of one or of more than one impulse or velocity-stage within each pressure-stage.

General Form and Arrangement.—The primary purpose of the following examples (Figs. 616 to 631) is to give a clear idea of

* It will be noted that the terminology "compound" and "complex", tentatively put forth in § 29 (*l*), is here definitely abandoned.

Digitized by Google

the essential form of the elements that have to do with steam-action. It is most usual to make the steam flow axially, or to have its direction of flow lie mainly parallel to the axis of the rotor—the only example of a radial-flow turbine here given being found in Fig. 627. With axial flow, the working elements (nozzles or guides, vanes or buckets) lie within an annular "solid of revolution" (in the geometrical sense): and views like Figs. 616, 618, 619, 623, and 628 are "developed" or flattened cylindrical sections through these working-elements.

A marked distinction as to form lies between the wheel or cellular construction of the multiple-stage impulse turbine, Figs. 620, 621, etc., and the drum arrangement of the reaction turbine, Fig. 629. And besides a progressive change in the diameter of the rotor, most marked in Figs. 629 and 630, the whole turbine is sometimes divided into two sections—high-pressure and low-pressure—in separate casings or "cylinders", as in Figs. 620. There these divisions (of the rotor) are on the same shaft; but in marine practice the H.P. and L.P. turbines are often set to driving separate propellers.

The machines described in this section are selected and grouped with regard to the essential characteristics of their steam-action,

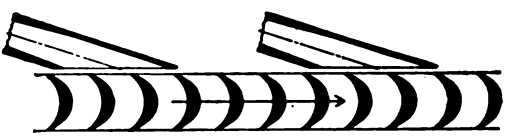

FIG. 616.—Element of Single-stage One-impulse Turbine, De Laval Type.

and not according to their commercial or even to their purely engineering importance; and no attention is paid to chronological order in development.

(*c*) THE SINGLE-STAGE ONE-IMPULSE TURBINE.—The only turbine of this type that has been commercially exploited is the De Laval, of which a brief partial description was given in § 29 (*k*). The essential form of the working-element is shown by Fig. 616, while Fig. 617 is the section of a complete turbine. Small wheels are used which have to be run at tremendous rotary speeds in

Digitized by Google

order to get the peripheral velocity necessary to reasonably good efficiency—practice ranging from a 4-inch diameter at 30,000 R.P.M. for 5 horse-power to 30 ins. at 11,000 R.P.M. for 300 horse-power, these diameters being measured to mid-length of the vanes. Then gearing is used to reduce the speed to something practically applicable at the power-shaft, G on Fig. 617. Other

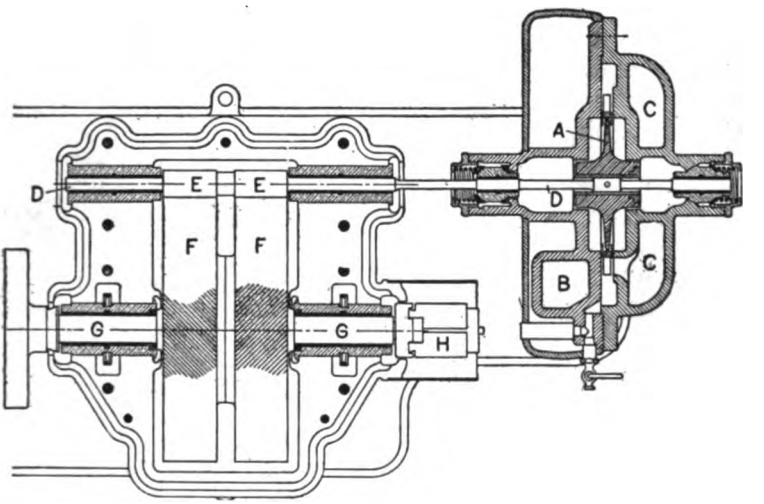

FIG. 617.—Section of 30 Horse-power De Laval Turbine, with wheel about 8″ in diameter at 20,000 R.P.M., vane-velocity about 700 ft. per sec.

single-stage turbines have been built for only moderately high rotary speed, with much larger wheels, one example being described in (*h*), under Fig. 625: but the designers of these have all gone on to the multiplication or combination of pressure-stages and velocity-stages.

The turbine-wheel A, Fig. 617, is a solid steel disk of special form, designed so as best to resist centrifugal force. Since it is impossible to make a wheel with absolutely perfect balance, or with the center of mass exactly on the geometric axis, the wheel is mounted on a light flexible shaft D. This shaft can easily deflect enough to let the center of mass come to the axis of rotation, whereupon the wheel will spin without vibration. Of course, the

Digitized by Google

mechanical balance is made as correct as is practically possible, and the flexible shaft is expected to care for only a small residual eccentricity.

The steam-chamber which supplies the nozzles is shown at B, the exhaust-chamber at C. The smallest turbines have only one nozzle; but as diameter and power increase more nozzles are used, the 30-in. wheel having perhaps twelve. These are usually spaced equally about the circumference, chamber B being given an annular form; but in the latest practice the nozzles are sometimes arranged in close groups, to diminish eddy-current losses. A throttling governor controls the admission of steam to the turbine;

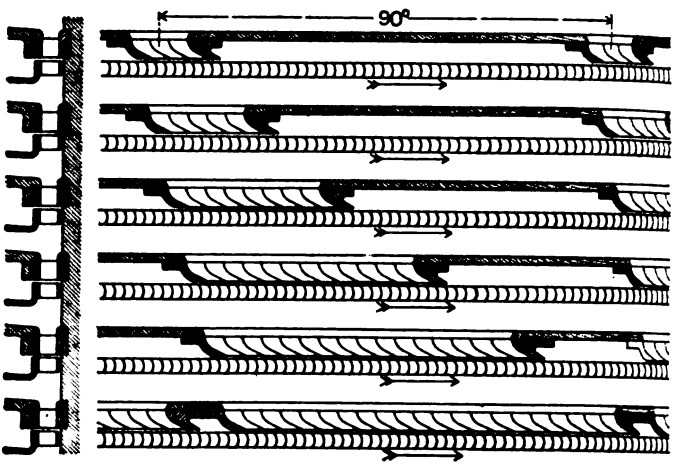

FIG. 618.—Developed Section of Multiple-stage Impulse Turbine with partial peripheral admission: based on high-pressure end of Rateau design, Fig. 620, but with rate of expansion somewhat exaggerated.

but when there are a number of nozzles, all but one or two are provided with valves, having external handles; then the power of the turbine can be adjusted by hand to suit the load, only a small range of control being ordinarily left to the governor. For a light load, it is far more economical to have a few nozzles working with high pressure than to have all open and the steam greatly throttled by the governor.

Digitized by Google

Sometimes a De Laval turbine which is to run either condensing or non-condensing will have two sets of nozzles, arranged alternately, either set to be turned on for the condition to which it is fitted. To develop the same power, a non-condensing nozzle must have a larger throat and less expansion or flare than one for vacuum-exhaust.

(*d*) MULTIPLE-STAGE ONE-IMPULSE TURBINES.—Representative forms of the working-elements of turbines of this class are diagrammed in Figs. 618 and 619; while a typical longitudinal section is given

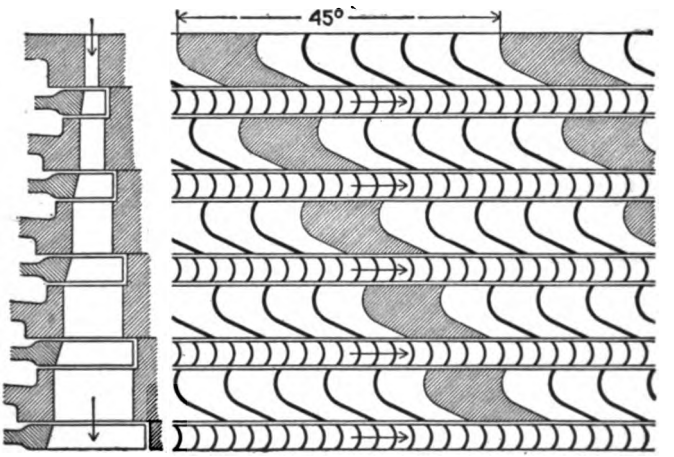

FIG. 619.—Developed Sectional View of Multiple-stage Impulse Turbine with full peripheral admission: outline of the low-pressure division of a Zoelly turbine.

in Fig. 620. With any considerable number of stages, the pressure-drop in each is so small that there is no need for the diverging nozzle; then the distributor takes the form here indicated, with rectangular openings divided by curved guide-plates into what are, in effect, groups of converging nozzles. The first two figures illustrate an important distinction, by showing the two methods available for increasing the sectional area of the passage for steam as the expansion progresses. In Fig. 618, partial peripheral admission is used, and, with a constant radial depth of the vanes and guides, increase of area is secured by making the successive groups

Digitized by Google

wider in the circumferential direction. The other method is to use the whole circumference for the passage of steam, and to increase the radial depth as necessary.

A fact made evident by these drawings is that in the so-called axial-flow turbines the steam-current really follows a slightly helical path. The method of plotting this path and of determining the angular advance of the successive distributors will be found in § 72 (*k*).

Another distinction to be made between Figs. 618 and 619 is based on a difference in the manner of passing the steam from one element to the next. In the first case, the steam from any wheel is discharged into a sort of receiver-space, in front of the next distributor; and the current is thus given a good chance to induce eddies in the (comparatively speaking) stationary mass of idle steam that fills all the space about the wheel. But with close and direct discharge into the next distributor, as in Fig. 619 it appears

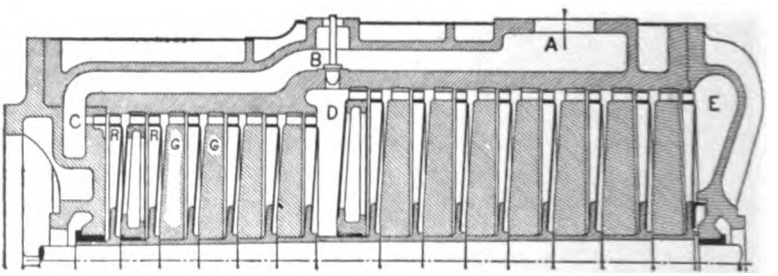

FIG. 620.—Section of a 24-stage Rateau Turbine, in three steps and two cylinders: 500 H.P. at 2400 R.P.M.: mean diameter of vane-rings, 20″ to 33″: vane-velocity, from 220 to 345 ft. per sec.

that this possibility is reduced to a minimum, so that there is reason to expect the fullest attainable utilization of the residual velocity from one stage in helping to produce effective initial velocity in the next stage.

It may be well to remark that Fig. 618 does not show true structural form, but that Fig. 619 is a correct drawing, so far as it goes into detail. The necessity of sufficient strength of metal to carry the diaphragm (subjected to different pressures on its two

Digitized by Google

sides) accounts for the stout cross-struts between the groups of nozzles in Fig. 619.

(*e*) THE RATEAU TURBINE may well be taken as typical of the many-stage single-impulse class. The two-cylinder turbine partly shown by Fig. 620 has rather a high number of stages: a later design illustrated by Stodola, for 500 H.P. at 3000 R.P.M., has 13 stages in one cylinder, with wheels approximately 18″ to 30″ in diameter, and velocity ranging from 250 to 400 ft. per second.

In Fig. 620 steam enters from the automatic throttle-valve at A and passes to the first nozzles at C: these form one group, subtending only a small angle; and the constant vane-length shows that partial peripheral admission is used all through the first two groups of wheels, or the first two diameter-steps, to E. At B is a hand-controlled bypass valve, which can be opened when the turbine must carry a heavy overload. Between the cylinder-heads

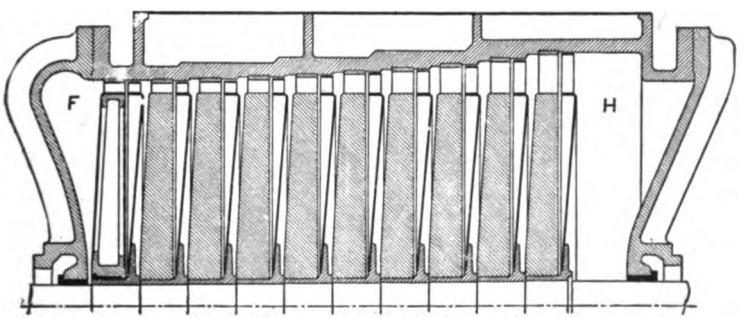

FIG. 620—*Continued.*

E and F is space for a double bearing and the governor, steam passing from E to F through a pipe below the floor-level. In the last step of ten stages the nozzles cover the whole circumference (after the first few stages, at least), increase in area of passage being secured by making the radial depth greater. From H there is a short and direct connection to the condenser.

As to the construction of this turbine, it will be noted that each wheel is a disk of steel plate, riveted to a light hub and flanged at the outer edge so as to form a narrow cylindrical rim upon which the vanes are riveted: in the larger diameters, an extra disk of

Digitized by Google

plate is usually added, for the sake of great stiffness. Holes through the wheels insure equalization of pressure on the two sides. The partition walls, in form fixed wheels held by the casing, are shown in detail only at the beginning of each step: these walls are made up of light cast frames or spiders, covered with disks of plate. Leakage from one cell to the next could take place only at the shaft, where it is prevented by the close fit of the bronze bushings—labyrinth packing (see § 74 (*f*)) being also used between the higher stages in the later designs.

In this, as in most horizontal turbines with many stages, the casing is divided along a horizontal plane through the axis, and the top half can be lifted off, carrying with it the upper half of each diaphragm. It is evident that careful fitting will be needed to insure tightness where the two parts of these diaphragms meet.

In none of the drawings in this section is much attention paid to non-essential mechanical details, such as bearings, stuffing-boxes, valves, etc. A few good examples of these parts will be found in § 74.

(*f*) THE MULTIPLE-IMPULSE TURBINE.—The idea of abstracting velocity from a jet of steam by making it impinge upon several sets of vanes in succession offers a very attractive means of reducing the velocity at which the vanes themselves must move—in simple theory, more effective than an equal multiplicity of pressure-stages, as is brought out in § 72 (*f*): but it is also made clear there that if the velocity-stages be too numerous, secondary losses due to friction and eddies will become excessive. In practice, four impulses from one initial velocity is the highest number that has been used in a successful turbine; and as the result of fuller experience there is evident a strong tendency to cut this down to two.

The three examples which follow not only illustrate the application of this particular principle, but are also of general interest as representing three contrasting types in the form and arrangement of the turbine-element. The Curtis turbine has curved radial vanes, with side admission, as in the examples already given and in the reaction turbine also; the Riedler-Stumpf shows the Pelton-wheel type of bucket, with tangential admission; while the Elektra is a case of radial flow, with vanes parallel to the axis and repeated

Digitized by Google

impulse upon the same set of vanes. Detailed discussion of the action of the vanes and buckets will be found in § 72 (c) to (f).

(g) THE CURTIS TURBINE is the most prominent member of the multiple-impulse class. In the smaller sizes, below 500 Kw.

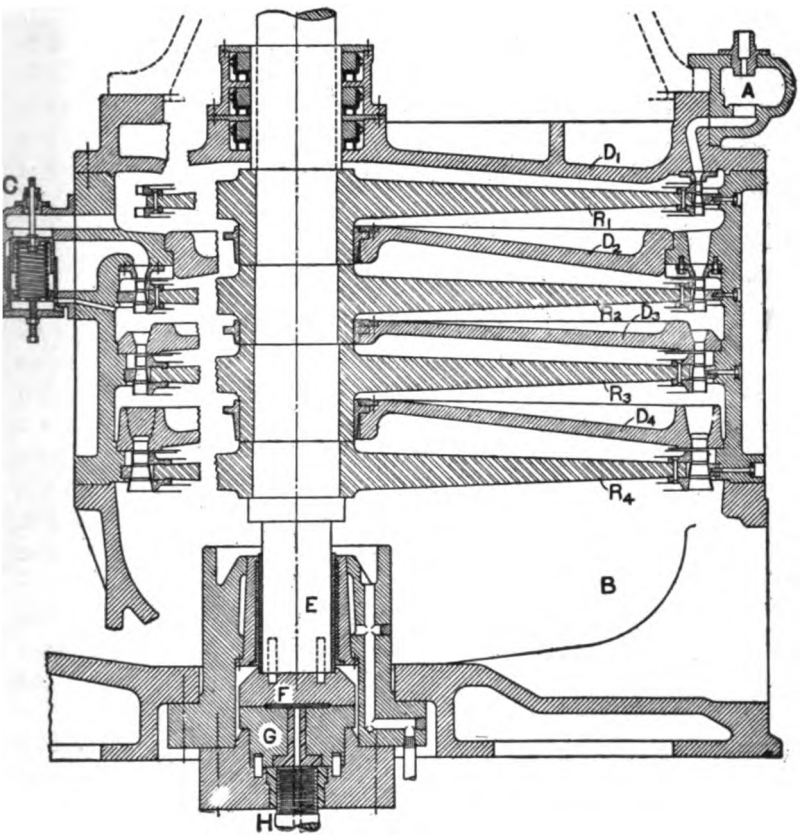

FIG. 621.—Section of a 2000 Kw. Curtis Turbine, with four two-impulse stages; 100" wheels at 750 R.P.M., vane-speed about 325 ft. per sec.

capacity, this machine is made with the axis horizontal; but the larger units, running up to 8000 Kw., are always vertical, with the generator, of course, at the top. A good typical recent design is shown in section by Fig. 621, which gives a very fair idea of

Digitized by Google

the larger detail in the construction and arrangement of the nozzles and vanes. The wheels are heavy steel castings, to which the blade-rings, made in a number of segments, are riveted fast. The cast-iron diaphragms are undivided, so that wheels and diaphragms must be assembled at the same time. For access to the turbine, a part of the cylindrical casting, which is made in four or six segments, can be removed.

The whole weight of the revolving piece, turbine-rotor plus generator-field, is carried by the large step-bearing at E, which has its working faces on the hard cast-iron blocks F and G. Through the hole at the axis of the big set-screw H, which serves to adjust the height of G, oil or water is pumped at high pressure to the recess between the blocks; and as it escapes outward it forms a thin film, separating the metal surfaces and producing perfect lubrication; in fact, the revolving mass is floated on the film of liquid. When oil is used, the casing around the bearing must be closed at the top, with suitable packing-rings to keep the oil from getting into the exhaust-steam: here the bearing is designed for water-lubrication, and the water is simply allowed to escape into the exhaust-base, the shells of the side bearing being loose enough to afford a free passage and prevent a backing-up of pressure. To the spindle H is keyed a worm-wheel, so that the height of the bearing can easily be adjusted from the side of the machine.

The admission of steam is controlled by a row of small valves at A, each supplying one or two nozzles: more or fewer of these valves are opened, through the action of the governor, as the demand for power varies; and the turbine is regulated not by simple throttling, but by something more analogous to the variation of cut-off in an engine. Details of the valves will be found in § 74, at Fig. 678.

Quite often there are two groups of admission-nozzles, at the ends of a diameter: but here there is only one group, and the circular dimensions of the successive distributors are about as indicated by the diagram-sketch in Fig. 622. The isolated group in the second ring, marked N_B, is served by the automatic bypass valve at C in Fig. 621, shown in detail at Fig. 680. It is evident that the disk of this valve feels the pressure in chamber I on its

Digitized by Google

top face, that in chamber 2 on the bottom; and when the difference between these exceeds a certain amount the valve will open. Since, however, this is below the main admission, it will affect only the distribution of work and not the total power; but it does come into service when the load is heavy and more nozzles are open in ring N_1 than can properly be taken care of by the normal part of N_2.

It will be noted that the partial sectional view at the left of Fig. 621 is not a continuation of the main section, but is made by a plane about at right angles to that of the latter view.

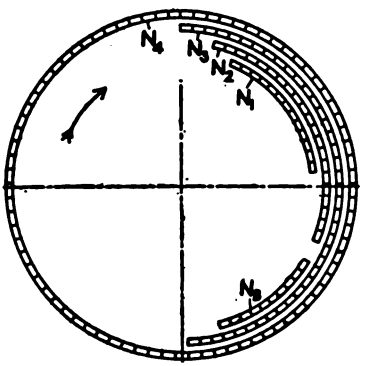

FIG. 622.—Diagram of the Nozzle-admissions in the Curtis Turbine.

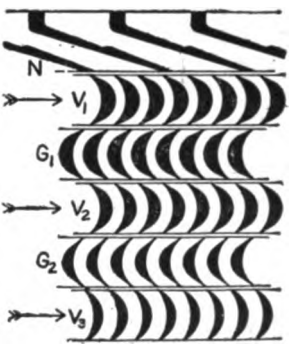

FIG. 623.—Three-impulse Element of a Curtis Turbine.

To give an idea of the shape of the vanes, the section of a three-impulse element is given at Fig. 623, reproduced from Fig. 73. Smaller Curtis turbines are made with only one or two stages, with three or four impulses in each. Some of the earlier very large machines had two four-impulse stages. Now, however, the type of design in Fig. 621 is becoming the standard for all big units.

(*h*) THE TANGENTIAL-ADMISSION WHEEL, similar to the Pelton water-wheel, has been used by several inventors of steam-turbines, and most extensively developed in the Riedler-Stump design, of which a number of different working-elements are sketched in Fig. 624. At I. we see how the flat semicircular buckets are milled in the rim of the steel wheel, each at an angle of 15° or 16° with a tangent to the circumference at its mouth. Wheels are made with

Digitized by Google

either single or double bucket-rows, as shown at II., which also gives the arrangement of the nozzles—these nozzles being circular in the throat, but changing to a rectangular cross-section at the outlet.

Various devices for securing two impulses in a stage are shown at III., IV., and V. In each case the curved guide G receives the

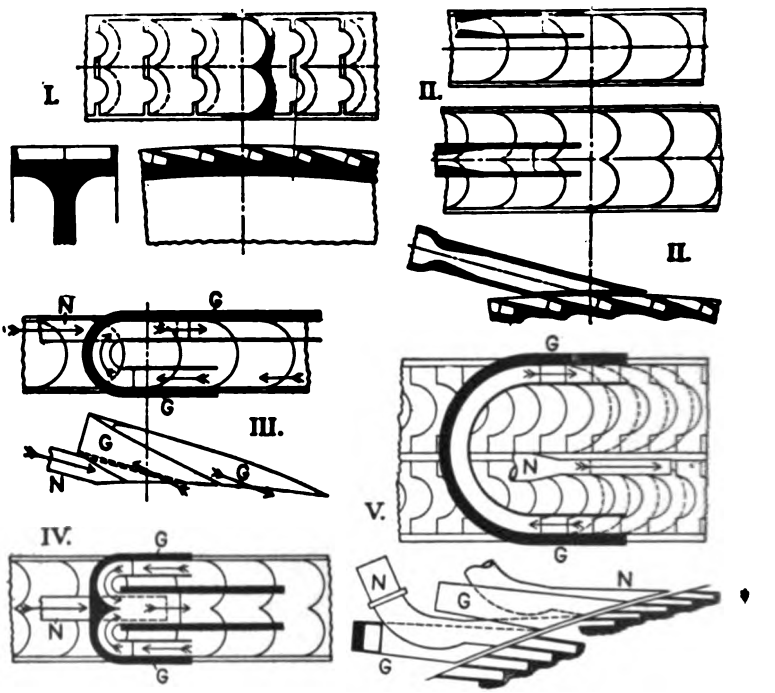

FIG. 624.—Working-elements of the Riedler-Stumpf Turbine.

steam as it escapes from the buckets after the first reversal of velocity, and turns the current back for a second entrance, either into the same buckets, as in III. or IV., or into another larger set, as in V. With return to the same buckets, the guide must have the peculiar helical shape shown by the side view at III., because the absolute steam-velocities at entrance and at exit will make different angles with the wheel-rim—see Fig. 640: but at V. the

Digitized by Google

second-stage buckets are given more slant, so that the guides can be flat. These guides are built up of pieces of plate, stamped out and riveted together, the heavy outer walls which give stiffness to the whole and which are fastened to the carrying brackets being usually made up of several layers of thick plate: this laminated construction is the more necessary when they must be bent to a special form as at III. or IV.

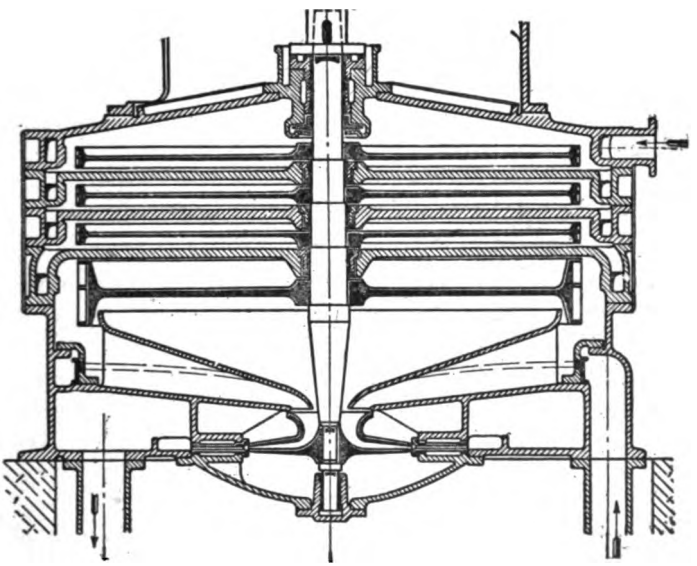

FIG. 625.—Vertical Four-stage Two-impulse Riedler-Stumpf Turbine.

The Riedler-Stumpf turbine is made in a number of different forms, ranging from a small one-stage horizontal machine to the large vertical design in Fig. 625, which is very much like the Curtis in Fig. 621 as to its general arrangement. Interesting particulars of a single-stage turbine built as one of the earlier experimental machines have been published: the wheel was 78.8″ in diameter and ran at 3000 R.P.M., so that the peripheral velocity was about 1030 ft. per sec.; there were between 80 and 90 nozzles, distributed all around the wheel; and the machine developed 2000 H.P., with very fair steam-economy. By multiplying stages and using the

Digitized by Google

two-impulse arrangement the rim-speed can be greatly reduced, and at the same time the efficiency of the apparatus increased. The principle of partial peripheral admission can very easily be applied by varying the number of nozzles in any stage: to govern the turbine, steam is admitted to more or fewer nozzles in the first stage.

An interesting feature of Fig. 625 is the centrifugal condenser-pump at the base, the jet-condenser being formed right in the base. Of course this device cannot maintain the high vacuum that is attainable with a surface condenser and good reciprocating pumps; but it is exceedingly simple, and has been credited with an absolute pressure of 0.1 atmosphere, equivalent to 27 inches of vacuum.

Another type of tangential-wheel turbine is represented by the skeleton-diagram in Fig. 626, which closely resembles the Pelton wheel in having the double-cup buckets formed in small separate castings, which are fastened to the rim of the wheel-disk. The sketch indicates how the cross-section for steam flow can be increased by using two or three wheels side by side in the lower stages.

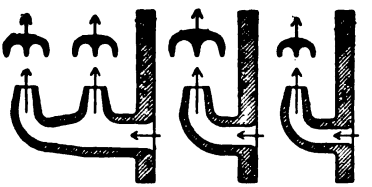

FIG. 626.—Elementary Sketch of the Kerr Turbine.

(*i*) A RADIAL-FLOW TURBINE with multiple impulse is shown in Fig. 627, where there is the further characteristics (to be emphasized in the present connection) that one vane-ring serves for the whole operation in the stage. The partial longitudinal section at B shows how the vanes project from the side of the wheel into an annular groove in the face of the diaphragm. On the high-pressure side, marked H, there are two nozzles, diametrically opposite; on the low-pressure side there are four. The manner of securing the three impulses is sufficiently obvious; and the weak point of the general scheme is suggested by the question whether the steam-current will docilely follow the very intricate path laid out for it. In the earliest patent of this arrangement (W... British, 1848—see Neilson's *The Steam Turbine*, 1903, p...

Digitized by Google

the steam-current is shown as acting upon the single ring of vanes twelve times, between inlet-nozzle and exhaust. It need hardly be remarked that experience would have entirely failed to justify this very complicated arrangement.

(*j*) THE PARSONS TURBINE.—The name Parsons is as closely associated with the multiple-stage reaction turbine as is the name

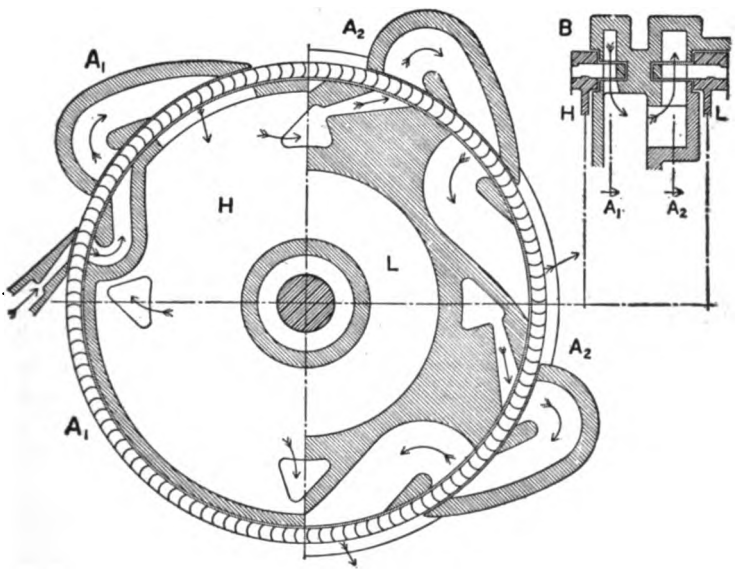

FIG. 627.—The Elektra Turbine, radial-flow, two-stage, four-impulse: much structural detail omitted.

Corliss with a type of engine—an association which will likewise probably persist long after patent-rights have expired. Partly because of the early pre-emption of the field and quite a long period of evolution to the arrangement in Fig. 629, partly because choice as to the form of the working-element is practically limited to the straight vane with side admission, there is really only this one reaction turbine in effective existence, as compared with a number of impulse types.

The name "reaction" comes from the fact that the major part

Digitized by Google

of the driving-force upon the rotor is due to the reaction of a current of steam which receives linear acceleration within the vanes,

FIG. 628.—Element of the Parsons Turbine.

while only a small component is due to the velocity with which jets from the fixed vanes impinge upon the moving vanes—a fuller explanation of this action being given in § 72 (*f*). To fit this process the vanes have the shape shown in Fig. 628, where the steam flows from left to right, and the vanes have a much larger angle (from the line of movement) at entrance than at exit, and the channels between them narrow toward exit, thus serving as contracting nozzles. Further, since there are different pressures on the two sides of a ring of vanes on the rotor, so that steam will flow through the whole ring, the fixed rings must likewise be complete, without any blank portions; in other words, partial peripheral admission is not practicable in a reaction turbine. It is for this reason that there is so much greater difference in size between the highest and lowest stages in Fig. 629 than in, for instance, Fig. 621—diameter of rotor as well as dimensions of the vanes entering into this question of size. The progressive increase in rotor-diameter is one of the prominent characteristics of this type of turbine.

In Fig. 629 the main admission-valve (automatic-throttling) is at V_1, and the steam normally begins its work at A_1; but if the load rises above what can be carried with full pressure at A_1, the governor opens the bypass valve V_2, thereby admitting steam to the second step of the rotor, R_2. This cuts the first, small-diameter step more or less completely out of action, the blades simply churning a mass of steam which has little progressive motion; but the larger area of cross-section available at A_2 lets in so much more steam that increased power is developed on the two larger steps alone, though with lower thermodynamic efficiency of the whole turbine.

Digitized by Google

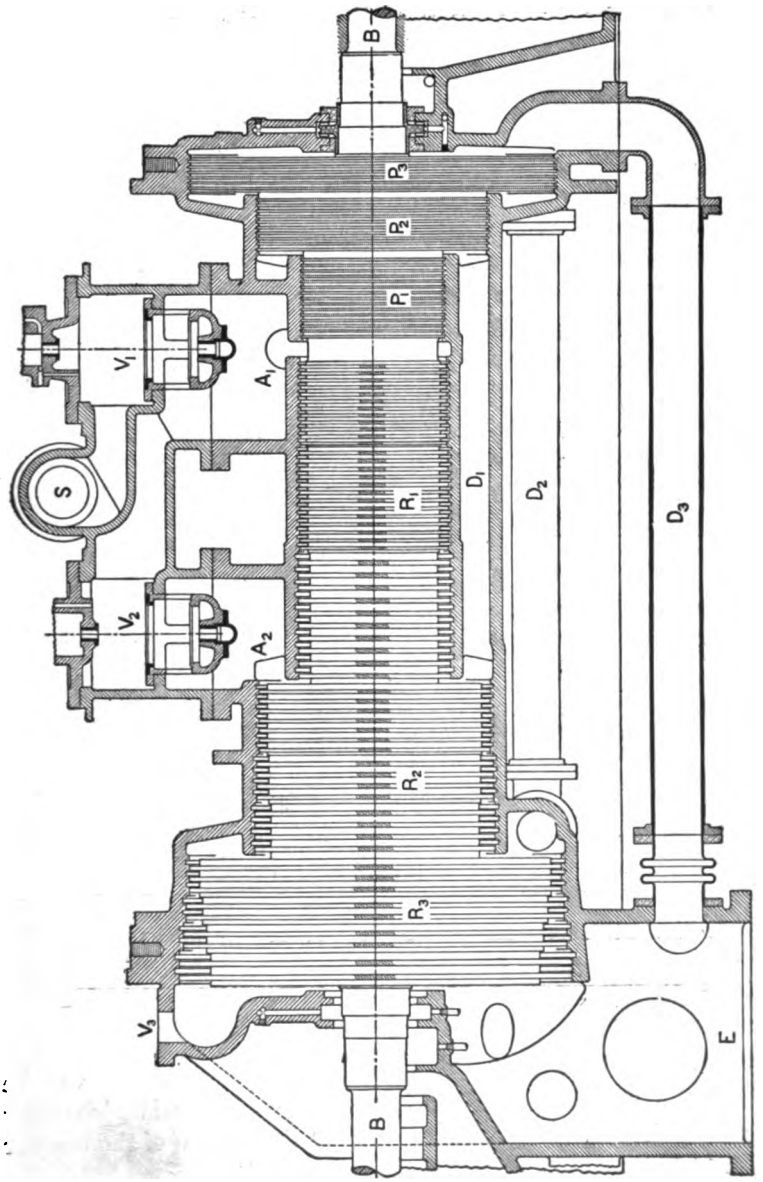

FIG. 629.—Section of a Typical Westinghouse-Parsons Turbine, with 59 stages in three steps.

Digitized by Google

An essential feature of this machine is the system of balance-pistons, P_1, P_2, P_3, which neutralize the end-thrust that would be caused by the steam-pressure on the blank annular surfaces at the diameter-steps, as well as on the moving blade-rings. Piston P_1 has the diameter to the mid-length of the vanes on step R_1, P_2 the mean diameter of R_2, etc.; half the vane-length being balanced because half the pressure-drop within the steam-belt occurs in the fixed vanes, half in the moving vanes. The special conduits D_1, D_2, D_2, which put the same pressures on the balance-pistons as on the rotor-steps, are self-explanatory. Leakage past the pistons is reduced to a minimum by the use of collar-and-groove or labyrinth packing. The construction of the stuffing-box is partly shown at the right end of Fig. 629, but an enlarged detail will be found in Fig. 664.

It will be noted that on the smaller steps R_1 and R_2 there are big groups of stages with vanes of the same size and length. Within

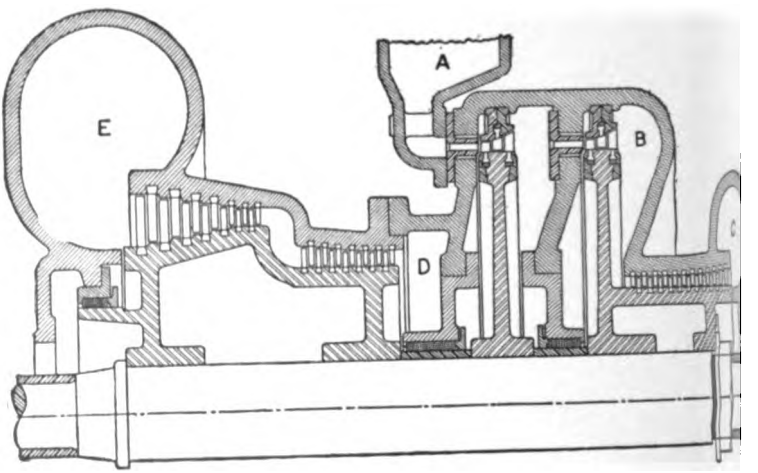

FIG. 630.—The Sulzer Turbine.

these groups progressive increase in area for steam-flow can be secured, if desired, by using fewer blades, with wider channels between them, as the pressure drops. A description of the manner of holding the vanes or blades is given in § 74 (*h*).

Digitized by Google

Since there is a drop of pressure through each set of vanes, it is evident that there will be tendency for the steam to leak past their ends; consequently a close fit, or a very small end-clearance, is necessary. This requirement is practically one of the most severe that have to be met on the side of construction, for not only must there be careful original work, but there is also the danger that rotor or casing will be distorted by unequal heating or other cause so as to make the ends scrape, or even to break the blades. To compensate for this disadvantage in comparison with the impulse turbine, which has so very much smaller possible openings for leakage, appears the advantage that the reaction turbine does not have a great deal of wheel-surface exposed to the frictional drag of surrounding steam.

(*k*) Turbines of Mixed Type.—The latest development in turbine design is the combination of high-pressure stages working by impulse with low-pressure stages of the reaction type. Two good examples are given in Figs. 630 and 631, the first having two impulse stages just like those of the Curtis turbine, the second having tangential buckets as in Fig. 624, while the low-pressure stages in both are of the Parsons type. The Sulzer turbine is so arranged and proportioned that it is self-balanced as to endwise steam-pressure, thus obviating the troublesome balance-piston: in the Union design the upward steam-thrust acts against the weight of the rotor and serves the very useful purpose of relieving the step-bearing of pressure—in fact, provision is made at one bearing for holding down the rotor if necessary.

(*l*) Reversible Turbines.—The feature which most distinguishes marine turbines from those for stationary service is the provision that must be made for running them backward. Vanes properly formed for forward motion cannot be used for reversed driving. The most obvious scheme is to combine with the main turbine a smaller turbine for backward running. This is not necessarily of less power, but is made compact and with but a few stages, hence of comparatively low efficiency. It can be added to the low-pressure end of the main rotor, where the frictional resistance to the normally idle (useless) movement of these extra parts will be very small.

Digitized by Google

The division of the turbine system into high-pressure and low-pressure sections, driving separate propeller-shafts, has already been remarked upon.

(*m*) THEORY OF TURBINE-ACTION.—We shall now take up the theory of the turbine, following the lines suggested in (*a*). In

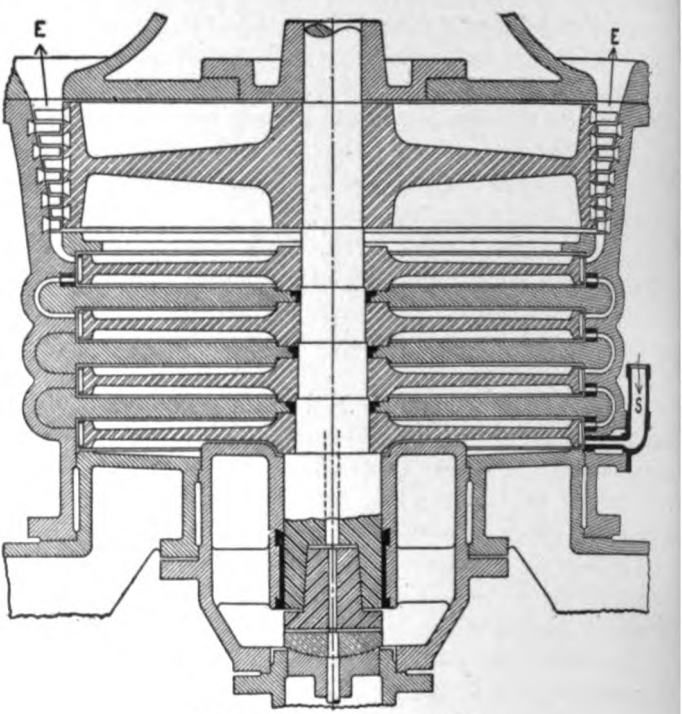

FIG. 631.—The Union Turbine.

the next section the discussion is purely mechanical, and the simplest ideal conditions are imagined to exist. Then in § 73, after the mechanical principles have been established, the thermodynamic questions involved in energy-transformation and in the secondary wasteful actions will be considered. The limits of space available will permit only a very general treatment of this latter field, which is both very extensive and of great practical importance; here

again we shall work for principles and methods, rather than for actual results. For one thing, not enough experiments have been made (and published) for the basis of a close-fitting theory; for another, a full presentation of even the work that has been done along this line would cover a great deal of space.

§ 72. Mechanics of the Ideal Steam-action.

(*a*) IMPULSE OF THE JET.—The first problem is to find the force which a jet of fluid exerts when it impinges upon a restraining surface, or the reaction which it exerts when leaving a confining vessel or channel. This force is called the impulse of the jet, and may be defined as the constant free force which, if it were to act upon the substance of the jet, would continually produce (or destroy) the steam-velocity V.

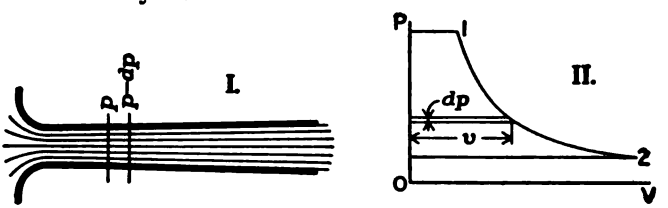

FIG. 632.—Generation of Kinetic Energy.

Really, of course, the steam is accelerated by an unbalanced internal pressure (not of constant intensity), as indicated in Fig. 632 I.; but the conditions of the process are such that quantitative relations must be calculated in terms of energy, rather than directly between force and mass. Fig. 632 II. shows that the element of work is $v\,dp$, and that the total kinetic energy due to pressure-drop from p_1 to p_2 is equivalent to the integral of $v\,dp$ between the limits p_1 and p_2—compare Fig. 45. Primarily, however, this energy can be determined much more easily as a thermal than as a mechanical quantity, and that is the method used in §§ 25 and 26 and in § 73.

Since we are at present concerned with mechanics rather than thermodynamics—with the jet as delivered and applied rather than with the detail of its formation—we may substitute for the

Digitized by Google

real process of velocity-generation the simpler process of equivalent effect outlined by the definition of impulse given above. The value of the impulse can be most easily derived through the quantity known as momentum. Starting with the fundamental relation, Force = Mass × Acceleration, or

$$F = MA, \quad . \quad . \quad . \quad . \quad . \quad . \quad . \quad . \quad (401)$$

and multiplying both sides of the equation by t, we have

$$Ft = MAt = MV. \quad . \quad . \quad . \quad . \quad . \quad . \quad (402)$$

That is, when a free force F acts upon a mass M through the time t, and generates the velocity V from an initial state of rest, the product of force by time equals the product of mass by velocity, which latter is called momentum. This is very elementary mechanics, but is of such vital importance in the present connection that it is worth repeating with emphasis.

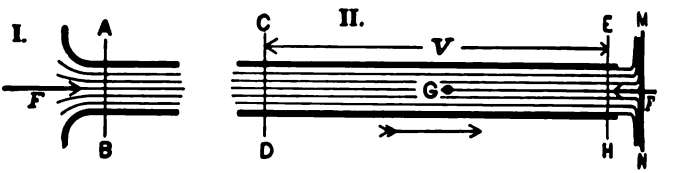

FIG. 633.—Impulse and Reaction of a Jet.

Now consider Fig. 633 I., where the fully formed jet, passing the cross-plane AB, has the velocity V, the sectional area a, and the specific weight w (pounds per cubic foot). In a time t the total weight $Wt = waVt$ will issue, having been raised from zero velocity to V by the action of the force F through this same time. Here $W = waV$ is the weight discharged per second, or the rate of flow. Putting these quantities into (402) we get

$$Ft = \frac{waVt}{g}V = \frac{WtV}{g};$$

Digitized by Google

or

$$F = \frac{wnV^2}{g} = \frac{WV}{g}. \quad . \quad . \quad . \quad . \quad . \quad . \quad . \quad (403)$$

In words, the force F is proportional to the density of the fluid and to the square of its velocity; or for a given rate of flow (in weight per unit of time) the impulse is directly as the velocity.

Another way of arriving at the same conclusion is to go back to the elementary principle that when a body, initially at rest, has attained the velocity V under acceleration by a constant force F, the distance travelled during the operation is the mean velocity $1/2\ V$ by the time t. Then the force F, in acting through the distance $1/2\ Vt$, does the work that is stored as kinetic energy. Considering what happens to the jet in one second, we have the energy equation

$$F \times \frac{V}{2} = \frac{WV^2}{2g}, \quad . \quad . \quad . \quad . \quad . \quad . \quad . \quad (404)$$

which reduces at once to the expression in (403).

Something like this latter action is pictured in Fig. 633 II., where the jet impinges upon a flat plate MN, and its energy of forward movement is continually being absorbed or transformed. The mass to be discharged in one second is shown as included between the planes CD and EH, which are separated by the distance V feet. At the beginning of the particular second under consideration, the plane EH just touches MN; and the center of mass G being then at the distance $1/2\ V$, this is the average distance through which the resistance F will act upon the mass W/G in bringing it to rest.

At I., in Fig. 633, the force F is represented as the impulse upon the jet; against the confining vessel is exerted an equal and opposite reaction. Similarly, at II. the force shown is the reaction of the plane MN upon the jet, while the latter at the same time exerts the positive impulse F, toward the right, upon MN.

(*b*) Deflection of a Jet.—In Fig. 634 a flowing jet or stream is depicted as entering at A and leaving at B a frictionless channel of uniform curvature and cross-section. The velocity remains

Digitized by Google

constant in intensity, and the action involved in its continual deflection is that of simple centripetal acceleration, against which reacts the centrifugal force of the stream.

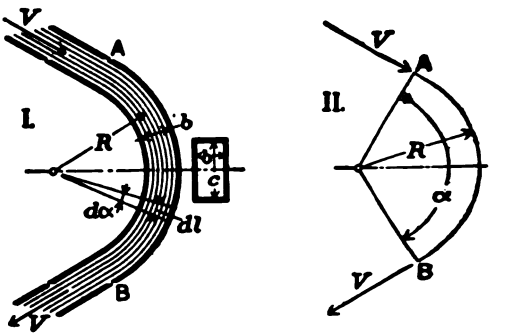

FIG. 634.—Deflection of a Jet.

The essential dimensions and symbols are as follows:

a = area of cross-section of channel, equals $b \times c$, the stream having the width b and the depth c;
R = radius of center-line of stream;
α = angle between any pair of radii;
l = length measured along curved center-line;
v = specific volume of fluid in jet;
w = weight per cubic unit = l/v;
V = velocity of flow;
A = acceleration;
W = weight of fluid discharged per second;
F = impulse of jet.

Consider an element of the stream which is included between two radial planes at the angular distance $d\alpha$ from each other:

$$\text{Length} = Rd\alpha; \quad \text{volume} = aRd\alpha; \quad \text{mass} = \frac{waRd\alpha}{g} = m.$$

The centrifugal force of this element is mV^2/R, or

$$f_c = \frac{waRd\alpha}{g}\frac{V^2}{R} = \frac{waV^2}{g}d\alpha. \quad . \quad . \quad . \quad . \quad . \quad (405)$$

Digitized by Google

This equation sets forth the very important result that the total force required to deflect the jet through an angle α is equal to the impulse of the jet multiplied by the angle of deflection, the latter being expressed in absolute angular measure, or with the radian as unit. This force, got by integrating Eq. (405) from zero to α, as indicated at II. in Fig. 634, is uniformly distributed along the curved path from A to B.

Another fact of interest is, that for a given set of jet-conditions (including the area a) the total deflecting force required, or the reaction of the jet upon the curved surface, is independent of the radius of curvature. Referring to the first expression for f_C in Eq. (405), we see that to make R longer increases the mass involved, by making the channel longer for a given angle, but at the same time decreases the centripetal acceleration V^2/R, so as to keep the product the same. The centrifugal pressure per unit of area changes, however, because the restraining area varies with the mass involved. Thus in Fig. 634 I. the outer surface of the element can be taken as $cRd\alpha$—disregarding the fact that the outer radius is really $(R+\frac{1}{2}b)$: then dividing this into f_C from (405), we get

$$p_C=\frac{wbcRd\alpha}{gcRd\alpha}\frac{V^2}{R}=\frac{wb}{g}\frac{V^2}{R} \quad . \quad . \quad . \quad . \quad . \quad (406)$$

as the extra pressure due to centrifugal force.

If, however, the width b also varies with R in constant ratio, as when two channels of different absolute size are geometrically similar in shape, then p will remain constant, but the total centrifugal force $F_C=\Sigma f_C$ will increase with R.

Example 1.—Let a steam-jet at 75 lbs. absolute pressure, with the velocity 1663 ft. per sec. and the specific volume 5.50 cu. ft. (see Table 24 A, 150 lbs. to 75 lbs.), flow in a channel 1/2″ wide by 1″ deep, with the mean radius 2″. What is the impulse of the jet and what the centrifugal pressure on the guiding surface, disregarding effects of friction?

Here $a=0.5$ sq. in., $=.00347$ sq. ft.

The rate of flow is $W=\frac{aV}{v}=1.050$ lbs. per sec.

Digitized by Google

The impulse is $F = \frac{1.05 \times 1663}{32.16} = 54.3$ lbs.

In applying Eq. (406) to find centrifugal pressure, we must be careful not to get feet and inches mixed. With b, c, and R in inches, the centrifugal force, as given in (405) becomes

$$f_c = \frac{w}{g} \frac{bc}{144} \frac{Rd\alpha}{12} \frac{12V^2}{R} = \frac{wbcRd\alpha}{144g} \frac{V^2}{R}; \quad \ldots \quad (405')$$

while the area involved, when we want to get pounds per square inch, is $cRd\alpha$ directly: then (406) takes the form

$$p_c = \frac{wb}{144g} \frac{V^2}{R}. \quad \ldots \quad (406')$$

For this problem, noting that $w = 1/5.50$, we have

$$p_c = \frac{0.5 \times 1663 \times 1663}{5.50 \times 144 \times 32.16 \times 2} = 27.15 \text{ lbs.}$$

Using the larger actual outer surface of the channel, with the radius 2 1/4" instead of 2", this pressure changes to

$$27.15 \times \frac{2}{2.25} \times 24.13 \text{ lbs. per sq. in.}$$

An obvious conclusion from this example is, that there may be a very considerable crowding of the stream against the guiding surface, with corresponding variation in the pressure within its cross-section.

(*c*) DRIVING FORCE ON THE VANE.—Knowing the centrifugal force exerted by the jet upon a curved vane-surface, the next step is to find the resultant, in a certain direction, of this radial force distributed along the vane. The problem is illustrated in Fig. 635, where the tangential force F_T is the resultant sought, acting in the direction of motion of the vane or bucket. Resolving any elementary force f_c, we get the driving component $f_T = f_c \cos\alpha$, and the axial component $f_A = f_c \sin\alpha$, the latter being parallel to the axis in the usual type of axial-flow turbines. To get F_T we make two integrations, one on each side of this resultant line. From

Digitized by Google

(405) we have

$$f_T = \frac{ua\bar{V}^2}{g}\cos\alpha d\alpha; \quad \ldots\ldots\ldots \quad (407)$$

then, for the resultant force,

$$F_T = F\left(\int_0^{\alpha_1}\cos\alpha d\alpha + \int_0^{\alpha_2}\cos\alpha d\alpha\right)$$

$$= F(\sin\alpha_1 + \sin\alpha_2), \quad \ldots\ldots\ldots \quad (408)$$

F being the impulse of the jet, as appears from (403).

For the resultant axial force F_A, a similar deduction gives

$$F_A = F(\cos\alpha_1 - \cos\alpha_2); \quad \ldots\ldots\ldots \quad (409)$$

obviously, it is highly desirable that this force be made zero, otherwise there would be a dynamic end-thrust on the rotor.

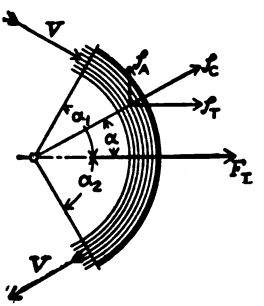

FIG. 635.—Resolution of Centrifugal Force.

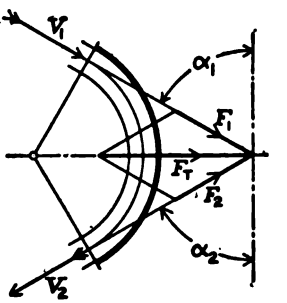

FIG. 636.—Combining the Impulses.

The form of Eq. (408) suggests at once the simple method set forth in Fig. 636. Considering the jet as exerting a positive impulse F_1 at entrance and a negative impulse or reaction F_2 at exit, we have only to combine these forces, or their rectangular components, to get F_T and F_A. Since impulse is proportional to velocity, this gives a very easy and convenient method for the solution of problems in force-action on the vanes of a turbine.

Digitized by Google

The velocity-diagrams given in the following figures are laid out by the method already used in Figs. 72 and 74. To get the relative velocity of entrance V_1, we must combine with the absolute jet-velocity V the reversed turbine-velocity T—this being the velocity of the nozzle with reference to the vane; to get absolute discharge-velocity V_0. T direct must be combined with the relative exit-velocity V_2.

(*d*) TYPES OF VANE-ACTION.—The turbine-elements outlined at I. in Figs. 637 and 638 are presented with the purpose of developing a clear idea of the meaning of the terms impulse and reaction as used technically in the present connection. In the first case the vanes are so formed that the steam leaves them in a direction perpendicular to the line of motion: then only the impulse at entrance is effective to produce driving-force F_T, and the energy-abstraction is very imperfect, as appears from the large residual velocity V_0. Another way of expressing this last condition is to say that the resultant F and the working-force F_T are comparatively small because F_1 and F_2 have such a large angle between them. Very evidently this type of element can be completed only by making the vanes symmetrical with respect to the center-line AB, thereby getting the well-known form shown in Figs. 616, 620, etc. In other words, what is called an impulse turbine really is driven equally by impulse and by reaction.

But while the scheme outlined in Fig. 637 is not effective, that of Fig. 638 is entirely so. Receiving the steam normally (to the line of motion) with the velocity V_1, the reaction-element accelerates it to V_2 and discharges it at a wide angle from the normal. This leads to the force-diagram III., where we see that the resultant F or F_T is large and is right along the line of movement. It appears then that while the "impulse" turbine must use reaction, the "reaction" turbine can get along without impulse. The real distinction lies in the fact, stated in § 71 (*b*), that in one case velocity is generated wholly in the nozzles, in the other case in both fixed and moving vanes. The characteristic vane-profiles shown in Figs. 639 and 641 result from this underlying difference. With a full understanding of what lies back of the terms, there can be no objection to the ordinary nomenclature: and a further distinction can

Digitized by Google

be drawn in that the effective exit-reaction in an impulse turbine is due wholly to deflection of the jet, while that in the reaction

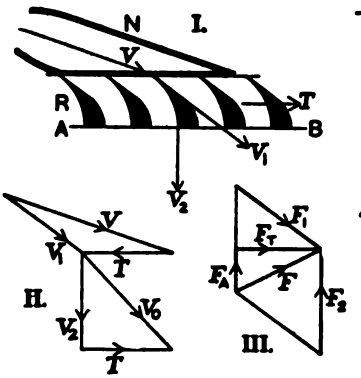

FIG. 637.—Driving by Impulse Only.

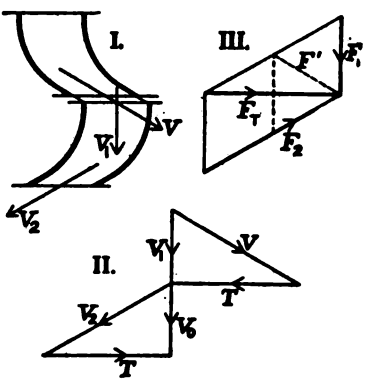

FIG. 638.—Driving by Reaction Only.

turbine is due to both deflection and linear acceleration. Comparing F_T with F' on Fig. 638 I., we see the gain due to acceleration within the wheel, over an impulse-vane with the same entrance-velocity.

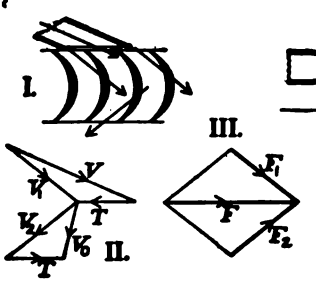

FIG. 639.—The Vane, with Side Admission.

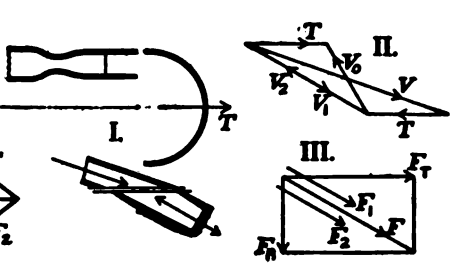

FIG. 640.—The Bucket, with Tangential Admission.

After the discussion just given, the actual profiles and their diagrams of velocity and force, as set forth in Figs. 639 and 640, ought to be self-explanatory. In Fig. 640, for the wheel with tangential admission as in Fig. 624, the plane of the diagrams at II.

Digitized by Google

and III. is that of the lower view at I., or it is the plane, perpendicular to the axis, in which the wheel rotates. Then the velocity-diagram doubles back on itself, because the projection of V_2 is simply V_1 reversed. It is necessary, of course, that V_e approach the radial direction, since the steam must escape from the wheel in that direction. The forces F_1, F_2, and F should really lie on the same line in their diagram, but are here separated for clearness of representation. Whereas with side admission the resultant F is itself the driving-force, the same thing as F_T, with tangential admission there is a non-effective component F_R, acting to cause pressure in the bearings, but which can easily be balanced by admitting steam to diametrically opposite parts of the wheel.

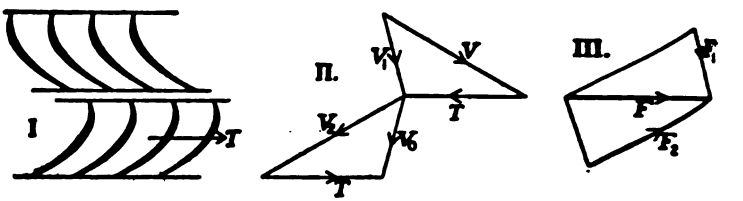

FIG. 641.—Diagrams for the Reaction Turbine.

The reaction vanes in Fig. 641 differ from the limiting form in Fig. 638 in that they provide for a small effective impulse at entrance. Since it is always desirable that the peripheral velocity be no greater than is absolutely necessary, this T is usually made quite a little less than the projection of V, giving V_1 the slant shown. Then the vane-profiles are made to fit the velocity-diagram, as in any case.

(*e*) WORK ON THE VANES.—The effective dynamic driving-force F (called F_T in the preceding discussion) acts upon vanes which have the velocity T; then the power, or rate of work-performance, is

$$P = FT \text{ ft. lbs. per sec.} \quad . \quad . \quad . \quad . \quad . \quad (410)$$

We shall now apply to several typical cases the principle represented by this equation, still adhering to the primary assumption that there are no losses by friction or by other secondary actions. In

Digitized by Google

the figures immediately following, the velocity diagrams (from which the impulsive forces may be directly determined) are changed to a rather more compact form than that used heretofore.

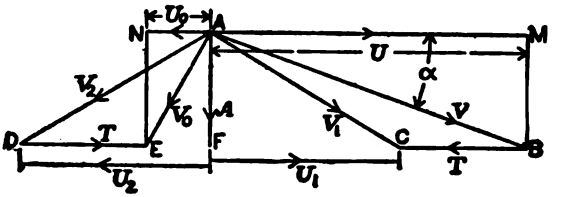

FIG. 642.—Velocity Diagram for the Impulse Element.

In Fig. 642, for instance, all the steam-velocities are laid out from the point A as an origin: AB is the initial absolute velocity V, AC the relative entrance-velocity V_1; the exit-velocity AD or V_2 is V_1 reversed symmetrically; and AE is the final absolute velocity, or V_0. For a discussion of work-performance we are concerned, however, not with any total velocity V so much as with its component U in the direction of motion, or along T; the effective impulses at entrance and exit being proportional to the velocities U_1 and U_2, according to Eq. (403). With the relation

$$V^2 = U^2 + A^2, \quad \ldots\ldots \quad (411)$$

and with the axial component A remaining constant throughout the successive transformations which take place, we see that changes in the kinetic energy of the steam-current are represented and measured by changes in the value of U^2.

Now for the impulse turbine, as represented by Fig. 642, and with the several velocities as there designated, the fundamental expressions are

$$U_1 = U - T \quad \text{and} \quad U_2 = U_1, \quad \ldots\ldots \quad (412)$$

the latter equation embodying the condition of symmetrical reversal, and being subject to modification in the actual case. The effective impulses are now

$$F_1 = \frac{W}{g} U_1 \quad \text{and} \quad F_2 = \frac{W}{g} U_2,$$

Digitized by Google

and the work-rate is

$$P=\frac{W}{g}T(U_1+U_2)=2\frac{W}{g}(UT-T^2). \quad . \quad . \quad . \quad (413)$$

Examining this for the maximum value of P, in the usual manner, we get

$$\frac{dP}{dT}=2\frac{W}{g}(U-2T), \quad . \quad . \quad . \quad . \quad . \quad . \quad . \quad (414)$$

which becomes zero when $T=1/2U$, thus proving the oft-stated principle that the velocity of the vanes should be one-half the effective velocity of the steam-jet for maximum efficiency. The greatest work-rate is now

$$P_1=2\frac{W}{g}\times\frac{1}{4}U^2=\frac{1}{2}\frac{W}{g}U^2; \quad . \quad . \quad . \quad . \quad (415)$$

or, as it should be, the full kinetic energy available in the weight W of steam that passes in one second.

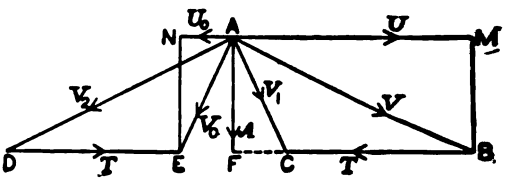

FIG. 643.—Velocity Diagram for the Reaction Element.

From the similar representation of the velocities in a reaction-turbine element, Fig. 643, we get the relations

$$U_1=U-T, \qquad U_2=U, \quad . \quad . \quad . \quad . \quad . \quad (416)$$

the second implying similarity between fixed and moving vanes. Then

$$F_1+F_2=\frac{W}{g}(2U-T),$$

and

$$P=\frac{W}{g}(2UT-T^2). \quad . \quad . \quad . \quad . \quad . \quad . \quad (417)$$

This is greatest when $U=T$, in which case the effective driving force is wholly due to reaction, since U_1 will be zero or the steam will enter the vanes at right angles to T. The maximum value

Digitized by Google

of P is now

$$P_1=\frac{W}{g}U^2; \quad \ldots\ldots\ldots \quad (418)$$

but this U^2 represents only half of the energy of one complete stage, since U is generated twice, first in the fixed vanes, again in the moving vanes. The total kinetic energy generated and absorbed is properly expressed by

$$P_1=\frac{1}{2}\frac{W}{g}(2U^2), \quad \ldots\ldots\ldots \quad (419)$$

this $(2U^2)$ being equivalent to the U^2 in Eq. (415).

(*f*) THE REACTION PRINCIPLE.—The fact has just been brought out that a reaction turbine transforms a certain amount of pressure-volume energy (one stage) in two parts, twice developing a steam-velocity 0.707 times as great as an impulse turbine would get in a single operation: and a good way to look at the performance of the reaction turbine is to consider that the function of the fixed element is simply to deliver steam to the vanes at their own velocity; whereupon the acceleration of this steam backward, by and within the moving vanes, produces the effective driving force.

This idea is best illustrated by the reaction wheel, which it is appropriate to consider briefly at this point, and of which the essential form is shown in Fig. 644. Steam is admitted to the interior of the rotor at the axis, flows out along the hollow arms, and is discharged through suitable nozzles at B, B. The reaction of the jet is the driving force, and maximum efficiency is secured when the velocity of the nozzles just equals that of the jet, so that the absolute velocity of discharge is zero. Here again, as in the turbine, half of the energy due to the pressure-drop is used in getting the steam-mass up to the velocity which it has at the end of the hollow arm, just within the nozzle (on account of the rotation of the wheel); and the other half accelerates the steam backward.

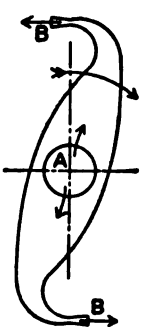

FIG. 644.—Outline of the Reaction Wheel.

This device has been applied by a number of inventors, but two

Digitized by Google

reasons lie against its effective use: the chief is the high velocity due to single-stage expansion; the other, the practical difficulty of avoiding leakage (or else excessive friction in the joint) where the steam enters the rotor—the stuffing-box problem being greatly aggravated by the fact that the steam has full pressure at this point.

It is of interest to note that for a stage of the same energy-value the reaction turbine must move faster than the impulse type. If the energy available will generate the effective velocity U_I, this will be the velocity realized in the impulse nozzles, and the best vane-speed will be $T_I = 1/2U_I$. But with the reaction arrangement, the steam-velocity will be $U_R = 0.707U_I$, and T_R must then have this same value, or must be 1.414 times as great as T_I. Actually, of course, the reaction turbine is usually made with the larger number of smaller stages.

(*g*) VARIATION IN THE RUNNING-SPEED.—It will be noted that neither Fig. 642 nor 643 is drawn for the case of ideal maximum efficiency, but rather for the conditions likely to be found in practice, where the vane-speed T is made as low as is consistent with reasonably good working. To see the effect of thus lowering T from the ideal value, we discuss Eqs. (413) and (417) as follows:

For the impulse turbine For the reaction turbine

$$P = 2\frac{W}{g}(U-T)T; \qquad P = \frac{W}{g}(2U-T)T.$$

In both cases, let $T = nU$, and put the expression into the form kinetic energy $\times$ a function of n; this gives

$$P = \left(\frac{1}{2}\frac{W}{g}U^2\right)(1-n)4n; \quad P = \left(\frac{W}{g}U^2\right)(2-n)n. \quad . \quad (420)$$

For the first case, let $m_1 = 4n_1(1-n_1)$, and evaluate for T varying by twentieths from zero to $1/2U$; for the second, let $m_2 = n_2(2-n_2)$, and go by tenths from zero to U. The common results are

$n_1 = 0$	0.05	0.1	0.15	0.2	0.25	0.3	0.35	0.4	0.45	0.5
$n_2 = 0$	0.1	0.2	0.3	0.4	0.5	0.6	0.7	0.8	0.9	1.0
$m_1 = m_2 = 0$	0.19	0.36	0.51	0.64	0.75	0.84	0.91	0.96	0.99	1.0

Digitized by Google

It is evident that the velocity T can be lowered to 70 or 75 per cent. of the ideal value without serious loss of effect. Further, we can see that these values of m might equally well have been gotten from Fig. 642 or 643 directly, by noting how the effective component U_0 of the residual velocity V_0 will vary with n or T.

An important assumption underlying the above table is that the vanes be changed in form, with the running-speed, so as to get full effect from the conditions existing in any case: and this leads us to the next matter to be taken up.

(*h*) VANE FORM AND THE EFFECT OF SPEED-CHANGE.—The proper function of a set of curved vanes or guides in a turbine is, to receive a current of steam without shock, to change its direction without the formation of eddies, and to discharge it in a desired direction. We will now consider some of the simpler questions involved in the performance of this function.

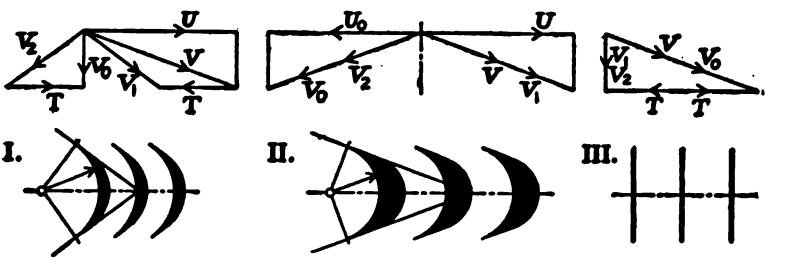

FIG. 645.—Vanes to Fit Various Speeds.

The first and most elementary problem, that of accommodating the shape of the vane to a proposed velocity diagram, is illustrated by Fig. 645. In Case I. the conditions are those for maximum efficiency in an impulse turbine, the vane-velocity T being half of the effective entrance-velocity U: the concave profiles are arcs of circles, made tangent to the lines of direction of the relative velocities V_1 and V_2; the convex profile is made up of a smaller arc and two tangents. If the channel between two vanes is to have an approximately constant width, the vane must, of course, be thickened toward the middle. This effect is much exaggerated at II., where the vanes are proportioned so as to receive and symmetrically reverse the full entrance-velocity, when $T=0$ or the vanes are

Digitized by Google

standing still. Case III. is at the other limit, where $T = V$ and current simply flows between straight vanes without exerting driving force—this being the greatest speed at which the wheel could possibly be made to run by steam-action upon symmetrical vanes. These extreme cases are of interest in that they are the limits between which must lie the various practical cases of a multiple-impulse turbine of the Curtis type, as illustrated, for instance, in Fig. 623.

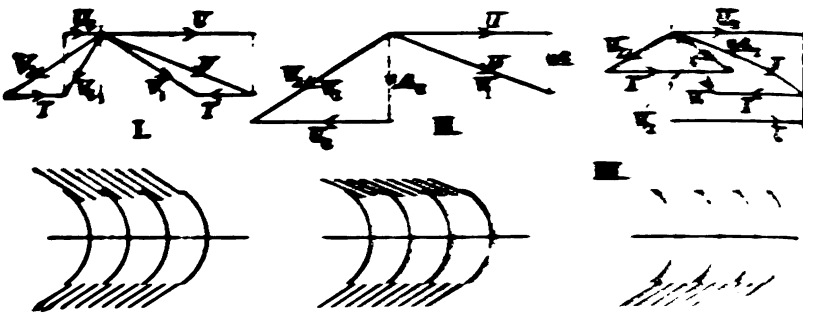

FIG. 646.—Various Speeds with the Same Vanes.

The next question is concerned with the effects of a change in the vane-speed T after the form of the vane has been fixed, the action being roughly represented in Fig. 646. First of all, the vane is properly proportioned for the conditions at I., where $T = \frac{1}{2}V$. At II. the vanes are at rest and receiving the full velocity V as T; then the current impinges obliquely on the working-face of the vane instead of entering tangentially; but we here assume that the discharge is tangential and that V_1 or V_2 is the same as V, or that no energy is lost. The total impulsive effect upon the vane is now much greater than when it is at normal speed: which fact can be expressed in another way by saying that the machine will have a large starting torque, greater than that which is exerted after it gets up to speed. As turbines are seldom used where they have to start under load, this property is of less practical importance than in a locomotive-engine or in an electric motor.

The third case illustrated in Fig. 646 is [redacted] T having twice the value at I.: this re-

Digitized by Google

happen if the turbine were "running away." It is seen that at entrance the current will exert a retarding impulse upon the back of the vane. Although this condition is highly favorable to eddy-losses, we for the present show V_2 as equal to V_1, and tangential to the vane at exit: then the final velocity V_0 has a direction approaching that of V, instead of pointing backward.

Cases II. and III. in Fig. 646 emphasize the requirement stated in (*e*), under Eq. (411), for the relations there developed; namely, that the progressive or axial component of the several entrance- and exit-velocities must be the same if change in kinetic energy is to be represented by change in the tangential velocity U (or in U^2). Here we see that as soon as the condition of symmetrical reversal from V_1 to V_2 fails to be realized, U_0 ceases to be a true criterion of the residual energy, and we must go back to the comparison of V_0^2 with V^2

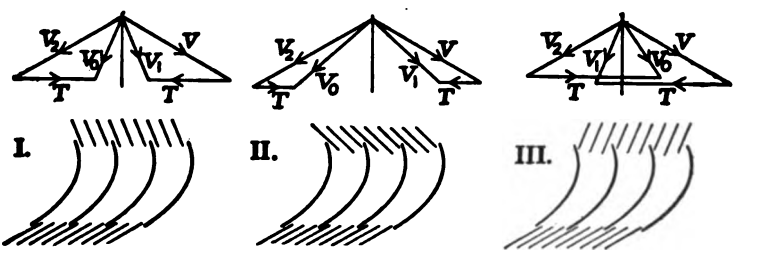

FIG. 647.—Speed-change with the Reaction Element.

A similar discussion of the reaction turbine is represented in Fig. 647: I. shows vanes for the normal speed $T=0.75\ U$: II., for lower speed, shows that the impulse at entrance becomes of relatively greater importance as the speed drops, even if we assume that none of the kinetic energy at entrance is lost within the vane, but that all of this plus the effect of the pressure-drop is present at exit. The conditions at excessive speed are closely analogous to those in Fig. 646 III., but are here even less favorable at entrance: and in Fig. 647 III. account is taken of the shock and eddy losses, in that V_2^2 is less than V_1^2 plus the same pressure-drop effect that is shown at I.

The question of the effect of speed-change in a many-stage

Digitized by Google

turbine is very complex: but we can see the general reason that if the cross-section of the total steam-channel has been designed for a certain running-speed with a certain rate of progressive pressure-drop, slower running will cause the pressure to drop more rapidly, while over-speeding will probably make the steam back up. The argument is that with under-speeding less energy is abstracted and the steam has increased velocity in the lower stages, hence gets out of the way more rapidly; but if the speed is raised above normal—the latter being less than the speed for maximum abstraction of energy—more energy will be taken out and the steam will have less velocity to carry it along. This loss of velocity will be increased by eddy effects, especially because the channel no longer fits the current smoothly.

A brief discussion of the secondary effects which modify vane-action will be found in § 73 (*k*).

(*i*) CHANNEL FORM AND AREA OF CROSS-SECTION.—In the most usual type of turbine, that with axial flow and having vanes with side admission, the channels for the passage of steam all lie within an annular space, which changes in diameter and in radial depth according to the requirement for effective area. The steam-current has, at any critical point, an actual velocity V_a and a progressive component-velocity A (see Figs. 642, 643, etc.): the latter is parallel to the axis or normal to the line of vane-movement, but the total velocity, as also the direction of the channel, is oblique to these rectangular reference-lines.

To understand the effect of this obliquity, consider Fig. 645, where the vanes in R are made straight, continuing the slant which actual vanes would have at entrance—being fitted, of course, to the velocity-diagram II. Letting b_0 represent the pitch of the vanes or the width of the channel in the circumferential direction, we see that the effective width is much less, having the value

$$b = b_0 \sin \alpha \quad \text{or} \quad b_1 = b_0 \sin \alpha_1 : \quad . \quad . \quad . \quad . \quad (421)$$

in other words, making the walls helical decreases the width of the channel by an amount which increases with the inclination from the axial direction.

In the turbine, the relation between the steam-velocities, as

Digitized by Google

shown at II. in Fig. 648, is the same as that between the channel-widths (in inverse order) for

$$V=\frac{A}{\sin a} \quad \text{and} \quad V_1=\frac{A}{\sin a_1}. \quad . \quad . \quad . \quad . \quad . \quad (422)$$

Consequently the flow-capacities are the same, since

$$Vb=V_1b_1=Ab_0. \quad . \quad . \quad . \quad . \quad . \quad . \quad . \quad (423)$$

The last expression, Ab_0, is then the criterion by which to measure the effective area for the passage of steam.

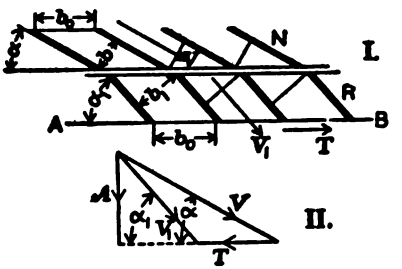

FIG. 648.—The Oblique Channel.

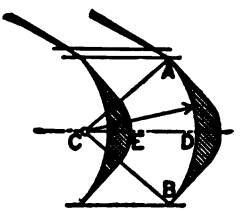

FIG. 649.—Channel of Constant Width.

The preceding discussion determines relations which in the actual case exist at entrance to and exit from the channels between curved vanes. For the body of such a channel the conditions which give constant width are set forth in Fig. 649, where the curved portion of the passage is included between the radial lines CA and CB, the same center C being used for the arcs through D and E. The straight lines (tangents) which form a large part of the outer profile of the vane-section have, of course, the inclination of the velocity V_1 as in Fig. 648, making the angle a_1 with the line CD.

An interesting conclusion from Eq. (423) is that if in an arrangement like Fig. 623 the vanes are brought to a sharp edge and formed as in Fig. 649, the diminution of obliquity will compensate for the diminution of velocity due to abstraction of energy—this on the assumption that the velocity changes are according to a diagram like Fig. 650, where A remains constant. Only for the purpose of accommodating extra losses of progressive velocity, as by friction

Digitized by Google

and eddies, need the channels be increased in radial depth within the pressure-stage.

(*j*) WORK-RELATIONS IN THE COMPOUND TURBINE.—The amount of pressure-drop from stage to stage in any compound turbine depends primarily upon the manner of variation of the total cross-section for the passage of steam—a question which will be taken up presently. A point to be brought out here, based on wholly mechanical considerations, is that the amount of kinetic energy properly to be generated and absorbed in each stage depends upon the velocity of the vanes. With a rotor having several diameters, as in Figs. 620 and 629, T is much larger in the lower than in the higher stages: but if the efficiency in energy-absorption is to be the same throughout, there must be nearly a constant ratio between V and T. We see then that the lower stages must be larger, in energy-value, than the upper stages; and, as a simple relation, that this value of the stage must vary directly as the square of the vane-ring diameter, or as the square of the corresponding velocities involved.

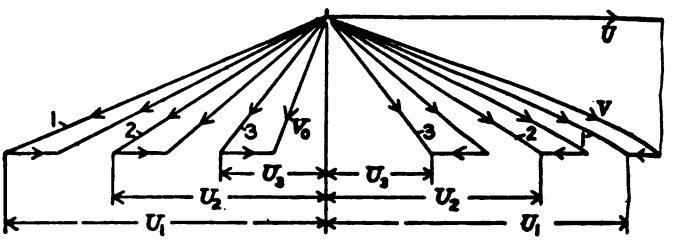

FIG. 650.—Velocity-diagram for a Three-impulse Stage.

Fig. 650 illustrates the relation between the quantities of work in the several velocity-stages of a multiple-impulse turbine, this velocity-diagram being constructed in the usual manner, for a three-impulse element like Fig. 623. In the figure the relative velocities of entrance and of exit are marked by the numbers 1, 2, and 3 for each set of vanes—compare Fig. 74. Following the method of Art. (*e*), and dropping for the time the factor W/g in Eq. (403), we have the following expressions for the driving-force in the respective stages:

$$F_1=2(U-T);\ F_2=2(U-3T);\ F_3=2(U-5T). \quad (\text{[illegible]})$$

Digitized by Google

Of course, the velocity-factor T in $P_n = F_n T$ is the same all through, so that the work-rates are proportional to the impulsive forces. If, for instance, T is one-seventh of U, as in the figure, the quantities of work done by the steam upon the vanes are as 6, 4, and 2 in the three velocity-stages.

To show the identity, under the conditions of simple theory, of the above example with the equivalent single-impulse element, we first add the three driving-forces in (424), then multiply by T to get the power developed, the results being

$$F = 6(U - 3T); \quad P = 2(U - 3T) \times 3T.$$

Since a single-impulse stage with the same limits V and V_0 as in Fig. 645 would have the vane-speed $T' = 3T$, the desired equivalence is self-evident.

(*k*) PATH OF THE JET.—The absolute path of an element of the steam-current as it passes along the moving vane is a matter of interest, and, in cases like Figs. 619 and 624 III. and IV., of considerable practical importance. Plotting this path is a simple geometrical process, which is shown in Fig. 651 for the side-admission vane.

First of all, the vane-profile ABC is divided into, say, eight equal parts; then, from either velocity-triangle, the distance that the vane will move on account of T while the steam travels over one interval with the velocity V_1 or V_2 is found. This is laid off parallel to BD, the proper number of times from each numbered point on ABC, and the result is the path ADE, which is tangent to V and V_0 at A and E respectively. For a tangential bucket, as in Fig. 624, the method would be essentially the same: in the reaction turbine it would be necessary to know how the steam is accelerated within the bucket; but with full peripheral admission there is no need of this determination.

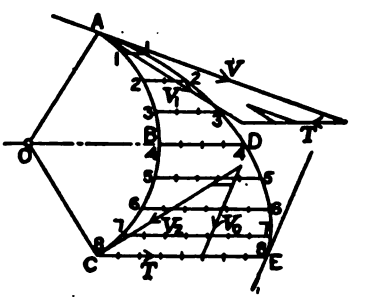

FIG. 651.—Plotting the Path of the Steam-current.

Digitized by Google

(*l*) THE LIMITS OF SIMPLE MECHANICAL THEORY of the steam-action have now been reached. We next take up the question of actual performance, using the mechanical principles just developed and the thermodynamic methods and results set forth in §§ 24 to 26, and following the lines laid out in § 71 (*m*).

§ 73. Actual Performance of the Steam in the Turbine.

(*a*) THE LIMIT OF THE THERMODYNAMIC PROCESS in the turbine, or the operation of maximum attainable efficiency, is the Rankine cycle, represented by ABCE in Fig. 652. For the discussion of turbine-performance, the entropy-temperature diagram is more serviceable than the pressure-volume diagram; and knowledge of the former, derived from Chapter VI. or an equivalent source, is a necessary preparation for what follows, with especial emphasis laid on a review of Figs. 79 and 80. Familiarity with the fundamental theory in Chapters III. and V. is also assumed.

In § 24, Eq. (116), was derived an expression for the heat-energy represented by the effective area ABCE, in the form

$$E = q_1 + x_1 r_1 - q_2 - x_2 r_2 + A(P_1 w_1 - P_2 w_2). \quad . \quad . \quad (425)$$

This was got by the pressure-volume method, using entropy relations only in finding x_2 from x_1 for the adiabatic expansion BC. To get the same formula from Fig. 652, we note that the area under the water-heating curve PA, down to absolute zero, is q_1, while under PE we have q_2 and under AB the heat of vaporization r_1, since x_1 is here unity. The heat received from E to B, starting with feed-water at T_2, is, then, as in § 9 (*d*) or § 16 (*a*),

$$Q_1 = q_1 - q_2 + r_1 \quad \text{or} \quad Q_1 = H_1 - q_2; \quad . \quad . \quad . \quad (426)$$

and the heat rejected, under CE, is very evidently

$$Q_2 = x_2 r_2, \quad . \quad . \quad . \quad . \quad . \quad . \quad . \quad . \quad (427)$$

although it can be, perhaps, more easily computed by the equivalent formula

$$Q_2 = (a_1 + b_1 - a_2) T_2. \quad . \quad . \quad . \quad . \quad . \quad . \quad (428)$$

Digitized by Google

The meaning of a and b, which are the entropies of heating and of evaporation, taken from the Steam-table, is fully explained in § 13 (c).

Subtracting Q_2 in (427) from Q_1 in (426), we get (425) for $x_1 = 1.00$, except that the last term, the water-volume effect, is lacking. This must be taken into account, because the work done by the

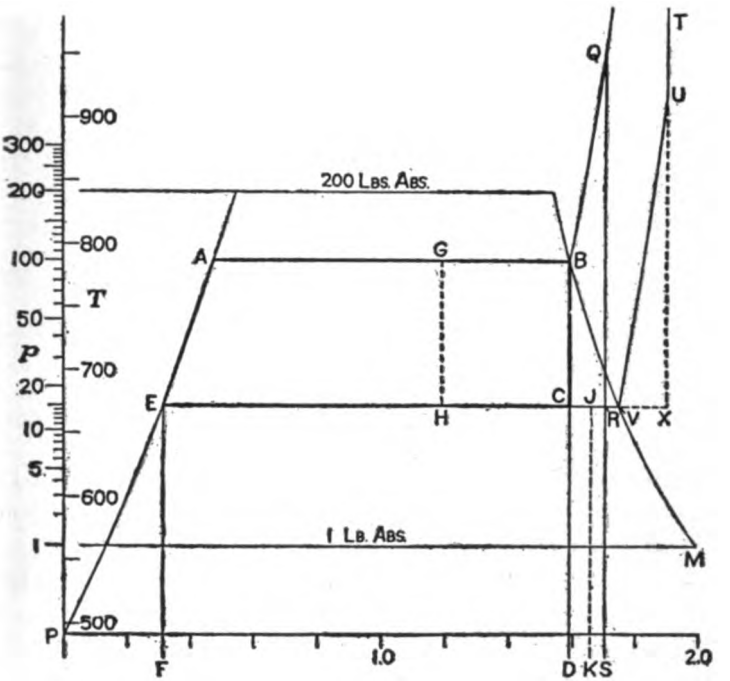

Fig. 652.—Entropy-temperature Diagram of the Rankine Cycle.

feed-pump in forcing water into the boiler reappears at the engine-piston or in the steam-jet; but it must be added to the cycle as something extraneous rather than a part of the main operation itself. It is more strictly correct to change this term to $A(P_1 - P_2)w_2$, because any external work of expansion as the water is heated from T_2 to T_1 in the boiler is included in the water-heat $(q_1 - q_2)$.

For the area of ABCE, Fig. 652, or for the disposable work ex-

Digitized by Google

pressed in heat units when the steam is dry-saturated at B, we have

$$E = q_1 + r_1 - q_2 - x_2 r_2 + A(P_1 - P_2)w_2$$
$$= H_1 - q_2 - (a_1 + b_1 - a_2)T_2 + 0.185(p_1 - p_2)w_2. \quad . \quad . \quad (429)$$

The latter formula was used in the computation of Table XII., where the values of E are so closely spaced that ordinary rectilinear interpolation will give sufficiently accurate results for any intermediate conditions.

Having this table, it is easiest to find the disposable work when the steam is wet or superheated by calculating the resulting quantity to be subtracted from or added to the tabular value. Thus when the steam contains the fraction m_1 of moisture, the area ABCE will be diminished by a rectangle whose width is $m_1 b_1$ and its height $T_1 - T_2$ or $t_1 - t_2$, so that

$$\Delta E = -m_1 b_1 (t_1 - t_2). \quad . \quad . \quad . \quad . \quad . \quad . \quad . \quad (430)$$

If the steam is superheated t_s degrees and we know the specific heat c (under constant pressure), the total heat imparted above t_1, or the area DBQS, is

$$h = c_1 t_s. \quad . \quad . \quad . \quad . \quad . \quad . \quad . \quad . \quad . \quad (431)$$

The portion of this heat rejected, under CR, is the product of the entropy CR and the lower temperature T_2. For CR we have from Eq. (175)

$$N_s = 2.3026 c_1 \log \frac{T_1 + t_s}{T_1}. \quad . \quad . \quad . \quad . \quad . \quad (432)$$

Then the area CBQR is

$$\Delta E = +(c_1 t_s - N_s T_2). \quad . \quad . \quad . \quad . \quad . \quad . \quad (433)$$

These methods are used in getting the values under w and W_R in the Test Tables, Chapter XIII., where w stands for what is here called ΔE, and W_R is the disposable work, measured in heat, or

$$W_R = (E + \Delta E). \quad . \quad . \quad . \quad . \quad . \quad . \quad (434)$$

The advantage over a direct calculation, with m_1 or t_s incorporated

Digitized by Google

into (425), is that the latter requires precise arithmetic, while ΔE can be well enough found by means of the slide-rule.

An essential inaccuracy with superheat is due to the fact that the specific heat varies with the temperature; but as a fair approximation a mean value for the given range and pressure may be used in Eq. (432). And with very high superheat the adiabatic TU may drop to the pressure p_2 while yet in the region of superheat, as at U, beyond the curve BM: then the constant-pressure exhaust-line will follow the curve UV, and of the total heat supplied beyond BD all under CVU will be rejected. The portion VUX can be most easily found graphically, and either be added to $N_s T_2$ or subtracted from ΔE as found by (433).

As bearing on the practical importance of this last point, we may note that the curve VUT on Fig. 652 is drawn for the conditions in Test 401.3, Table 75 E, with 600 degrees of superheat, non-condensing. With about 300 degrees X will fall very near R on a horizontal line at 15 lbs. abs.; but with a condensing engine or turbine X will be far inside of R for any attainable superheat.

(*b*) NET PERFORMANCE OF THE TURBINE.—Of the total energy E which is available for accelerating the steam-jet, a very considerable portion is not effectively transferred to the turbine-rotor, but is wasted by being changed back to heat through current-friction, eddies, etc., and rejected in the exhaust. In Fig. 652, for instance, it is assumed that one-third of E, represented by the area GBCH, is thus lost; then the effective output is only AGHE, and the heat rejected is increased by the amount DCJK. The entropy-increment CJ is found by dividing GBCH by the absolute temperature T_2. Here we do not attempt any analysis of the losses, but simply lump them all together and show their gross effect: and it must be clearly understood that the line GH does not represent any operation in the turbine, but is used merely to divide the area in a certain proportion. Referring to Table 75 E, we see that the total thermodynamic waste is likely to lie between 35 and 45 per cent. in good turbines of fair size. But before taking up the discussion of the character and amount of these losses, we shall consider briefly what happens in a multiple-expansion turbine, where the wastes in one stage increase the supply of heat for the next.

Digitized by Google

This is illustrated in Fig. 653, for a four-stage turbine. The pressure-limits are 165 lbs. and 1 lb. per sq. in. absolute, and the total available energy $A_1B_1CE_4$ is divided into four nearly equal parts by the lines A_2B_2, A_3B_3, A_4B_4. Now the loss $G_1B_1C_1H_1$ moves the adiabatic line for the second stage out to B_2C_2, and similarly each of the succeeding stages has drier steam, or more heat to work with, than it would have had with simple adiabatic expansion from the initial state at B_1. Of course the effect of this restoration is comparatively small: thus in Fig. 653 the efficiency of each stage is taken to be 65 per cent., this being the ratio of any AGHE to

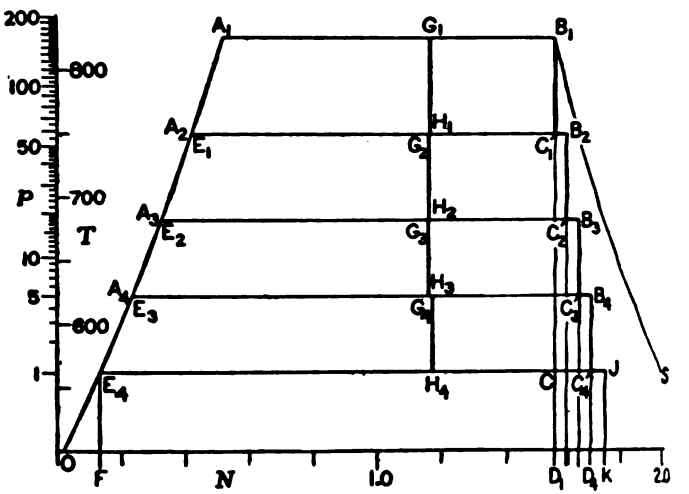

FIG. 653.—Diagram for the Multiple-stage Turbine.

the corresponding ABCE; while the total efficiency, the ratio of $A_1G_1H_4E_4$ to $A_1B_1CE_4$, is 68.5 per cent., showing a net gain of 3.5 per cent. as a slight compensation for the earlier losses.

The actual behavior of the steam in the turbine is a matter about which, in its more intimate and exact detail, very little is known. The subject is much like that of the thermal interactions within the engine-cylinder, being equally incapable of accurate determination and of expression in terms of the results of simple experimentation on isolated elements of the problem. [illegible]

Digitized by Google

less much light is thrown on the subject by such experiments, and we shall now very briefly review the methods and the results of researches which have been made.

(c) FLOW THROUGH ORIFICES.—The best group of experiments to find the rate of flow through the convergent nozzle and the plain orifice seems to be those of Professor Rateau, made in 1895–6 and first published in 1900. Selected results are given in Table 73 A, the nozzles tested are shown in Fig. 654, and the whole series is plotted in Fig. 655. The tabular quantities are reduced to a form directly comparable with the ideal jet as set forth in Tables 26 A and B. The meaning of each symbol is as follows:

p_1 = initial pressure in pounds per square inch absolute;

R_p = ratio of discharge pressure p_2 to p_1, or p_2/p_1;

K = actual value of the divisor in the formula

$$W = \frac{ap_1}{K}, \quad \ldots\ldots\ldots \quad (435)$$

where a = area of orifice (least area of nozzle) in square inches and W is discharge in pounds per second. To put the relation into simplest shape, let $w = W/a$ be the flow in pounds per square inch per second, so that

$$K = \frac{p_1}{w}. \quad \ldots\ldots\ldots \quad (436)$$

This formula was used in getting K from the original tables of results: and it is to be noted that K is numerically the same either for lbs. per sq. in. of pressure and of discharge or for kg. per sq. cm. of pressure and of discharge.

To continue with the symbols in Table 73 A,

K_T = tabular or theoretical divisor, from Tables 26 A and B;

K_T/K = coefficient of discharge, equal to W/W_T, where the latter are respectively the actual and theoretical rates of flow;

W_H = actual rate of flow in the test, expressed in pounds per hour to give an idea of the magnitude of the experiment.

Digitized by Google

The quantity plotted on Fig. 655 is the coefficient of discharge W/W_T, on the pressure-ratio R_p as base. Curves A, B, C (for the similarly designated nozzles) are separated, each having its own scale, while N is their average to the main scale at the left which serves for curve D also. Except at the beginning of curve C the results are very smooth and consistent, even with the irregu-

TABLE 73 A. EXAMPLES FROM RATEAU'S EXPERIMENTS ON FLOW OF STEAM.

	p_1	R_p	K	K_T	K_T/K	W_H
A	151.8	.890	108.3	103.9	.959	561
	143.7	.738	77.8	75.7	.974	707
	151.4	.466	70.1	70.5	1.006	830
	138.3	.015	69.3	70.3	1.015	765
B	77.1	.953	159.0	148.2	.933	503
	86.2	.908	115.6	110.3	.949	775
	55.7	.891	106.7	101.2	.951	542
	58.3	.474	68.0	68.7	1.011	890
	58.9	.282	67.9	68.7	1.012	900
	110.7	.019	68.8	69.9	1.016	1670
C	57.4	.984	277.	249.	.899	570
	57.6	.951	159.7	145.2	.910	992
	17.6	.864	95.7	89.8	.945	507
	22.5	.782	79.3	75.6	.956	780
	21.4	.687	70.5	69.2	.981	837
	23.2	.544	67.1	67.0	.999	951
	22.8	.432	66.4	67.0	1.009	947
	16.9	.105	65.3	66.4	1.017	712
	41.7	.058	67.6	68.1	1.022	1700
D	70.9	.965	275.6	171.1	.620	458
	46.0	.838	128.2	86.0	.672	638
	41.4	.640	92.0	68.8	.749	802
	58.8	.396	81.4	68.7	.844	1280
	54.9	.257	78.2	68.6	.877	1250
	57.5	.039	77.9	68.7	.883	1312

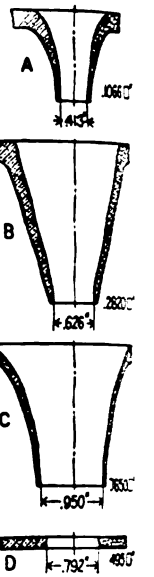

FIG. 654.—Nozzles Used in Rateau's Experiments.

larities greatly magnified by the coarseness of the vertical scale. Variation in the initial pressure p_1, as distinguished from variation in R_p, seems to have very little effect. For the converging nozzle the actual flow keeps very close to the theoretical, but the manner of change in relation, and especially the fact that the coefficient becomes greater than one with low discharge pressures, have not

Digitized by Google

been rationalized. It does not appear that the small differences in form of nozzles A, B, and C have any appreciable effect upon the flow. With the plain orifice the discharge keeps on increasing after p_2 drops below the critical value $0.58p_1$, though at a diminishing rate.

Other experiments confirm those of Rateau, showing a similar small excess of actual over theoretical discharge with low pressure-ratios, even when a short straight tube is added beyond the con-

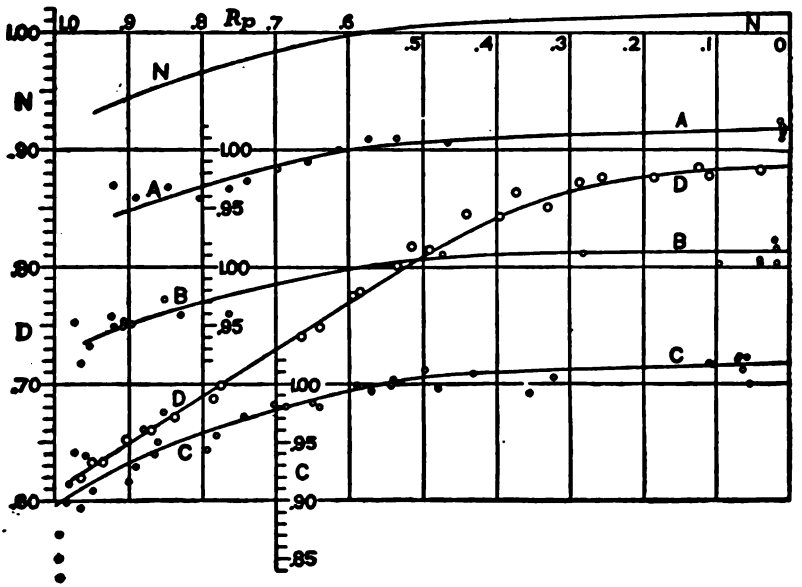

Fig. 655.—The Coefficient of Discharge as Determined by Rateau.

verging nozzle. A good collection of data along this line will be found in Thomas' *Steam Turbines*, at page 101 of the first edition.

(*d*) Flow with a Diverging Nozzle.—Some experiments have seemed to show that the addition of the diverging cone diminishes the rate of flow; but the more reliable work does not appear to confirm this view for a nozzle with proper entrance-rounding. In one of Lewicki's tests (see Art. (*f*)), a De Laval nozzle for atmospheric exhaust was used having the following dimensions:

Digitized by Google

Least diameter, $d_0 = 0.238$ in.; outlet diameter, $d_2 = 0.305$ in.; least area, $a_0 = .0447$ sq. in.; ratio of divergence, $a_2/a_0 = 1.64$. Note: d_2 is measured where the slanting end-surface begins to cut across the cone, or it is the largest diameter of the fully enclosed part of the cone. The total taper of the cone is about 1 in 16.

With an absolute steam-pressure of $p_1 = 99.1$ lbs., and atmospheric discharge-pressure $p_2 = 14.5$ lbs., making the ratio $R_p = 0.146$, the flow was .0664 lb. per sec.: this makes the rate w equal 0.149 lbs. per sq. in. per sec., whence $K = p_1/w = 66.7$. For this experiment (No. 5 in Table 1 *b* of the original), the steam was superheated only a few degrees: we may therefore take K_T from Table 26 B, getting 69.7, and the coefficient of discharge becomes $K_T/K = 1.045$. The flow was not measured directly, as this was a reaction experiment; presumably it was found by a parallel test, with recondensation and weighing of the steam discharged. The excess of 4.5 per cent. seems rather large, but the essential fact is that there is an excess, just as in Rateau's experiments with converging nozzles.

In one case the diverging nozzle greatly augments the rate of flow, as pointed out by Stodola, Ed. II., English, page 68. This is when there is only a small pressure-drop, and the action is like that illustrated in Fig. 657. The diverging part of the nozzle is entirely superfluous under these conditions, so far as the proper formation of the jet is concerned; and its effect is to induce an excessive pressure-drop and a higher velocity in the throat, with subsequent rise and retardation. The velocity at the throat of the nozzle is, of course, what determines the discharge.

The information available in regard to this subject of the rate of flow seems to justify the conclusion that, with properly formed nozzles, the discharge will differ very little from that deduced by simple theory. What is meant by a properly formed nozzle will be further developed presently.

(*e*) VELOCITY OF THE JET.—How nearly the ideal velocity is realized at the mouth of the distributor or nozzle is a fundamental criterion of the performance of this part of the turbine, since it shows what proportion of the available energy has been effectively converted into the form which can be absorbed by the rotor. The

Digitized by Google

experimental determination of this velocity is a matter of much difficulty, and some investigators appear to have followed false leads.

The Reaction Method.—With the first part of § 72 before us, measurement of the force of reaction offers itself as a very simple way of finding the velocity with which this reaction corresponds—using either the reaction on the containing vessel as indicated in Fig. 633 I., or the pressure on a flat plate held in the jet as in Fig. 633 II.

Reaction of Jet-formation.—The first idea is applied by forming the nozzle in the side of a vessel which is suspended at the end of a pendulum or of a flexible tube, steam being introduced at the point of suspension or of attachment of the tube; the opposite side of the vessel bears against a suitable dynamometer or weighing device, the scheme being outlined in Fig. 656 I.

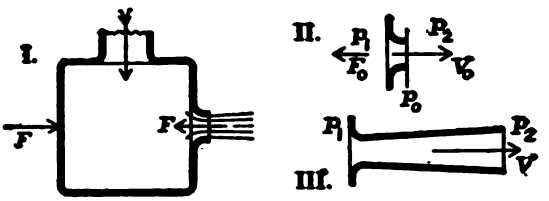

FIG. 656.—Measuring the Reaction of the Jet.

Several extensive sets of experiments have been made along this line; but a fundamental error which vitiates most of them consists in the assumption that the force measured is all dynamic reaction, due to the realized velocity of the jet. That this assumption is incorrect is shown at II. in Fig. 656. At the mouth of the plain converging nozzle will exist the velocity V_0, produced by the drop from p_1 to p_0 ($=.575\ p_1$); with this velocity the dynamic reaction F_0 will tend to impel the vessel toward the left. Besides F_0 there will be a static-pressure reaction, due to the fact that upon an area a_0 on one side of the vessel (the nozzle-mouth) acts the pressure p_0, while upon the corresponding area on the other side acts only p_2. In general, if p is the pressure and a the area at the mouth of the nozzle, the jet having the velocity V, to which corresponds the

Digitized by Google

reaction F, the total force tending to move the vessel will be

$$P = F - p - p_2 a \quad . \quad . \quad . \quad . \quad . \quad . \quad (5)$$

Only when the pressure in the jet at the mouth of the nozzle is equal to p_2, or when the whole operation of acceleration to the velocity at p_2 is carried out within the nozzle, does the measured force agree with the dynamic reaction—this case being illustrated by Fig. 656 III. It appears, however, that when the nozzle diverges too much for the drop from p_1 to p_2, so that the pressure in the jet falls below p_2 and then rises to this value at the outlet, the action being all carried out within a nozzle which is part of the movable vessel, that then the net effect is a dynamic reaction due to the velocity at the mouth of the nozzle. The larger dynamic force due to the highest velocity is partly balanced by the effect of the retardation in the nozzle towards its mouth.

An analysis of the exact manner in which the reaction-forces act upon the containing vessel, involving a study of just how the pressure varies and the current is accelerated, might be of interest but it is of no practical importance, in view of the fact that we can pass over all these details and go right to the resultant effect, as already pointed out in § 72 (*a*).

Experiments by this method are valueless without a measurement of the pressure in the jet at the mouth of the nozzle—a determination not included in any that have so far been made and published.

(*f*) REACTION OF JET-DESTRUCTION.—This heading describes what takes place when a flat plate is set squarely in the path of the jet, as in Fig. 633 II., so as completely to destroy the forward movement of the current, deflecting it all out sidewise. To illustrate what can be done by its method, we will consider briefly the experiments of E. Lewicki at Dresden, published in *Zeitschrift des Vereins deutscher Ingenieure*, 1903, page 491.

The nozzles used belonged to a 30-H.P. De Laval turbine (see Test 401, Table 75 E); one has already been described in Art. (*d*) the other was a converging nozzle with long taper—in effect, the first reversed. The steam-pressure u[illegible] 100 lbs. the

lute, and the plate on which the jet impinged was held at distances ranging from 0.2 in. to 9 ins. from the end of the nozzle—the latter being some distance from the mouth proper, on account of the slant at which the nozzle is cut-off. The dynamic pressure of the jet being measured, the velocity was calculated from it and compared with the ideal velocity that would be produced by a perfect transformation of energy with adiabatic expansion. The results secured were as follows:

Using the converging nozzle, the velocity-loss varied from 0.128 when the plate was close to the nozzle-end to .08 at 2 ins. distance, .05 at 3 ins., .033 at 4 ins., .043 at 6 ins.; each of these fractions showing the difference between actual and ideal velocity, expressed as a part of the latter. These tests were all made with about 100° F. of superheat. With the diverging nozzle, properly proportioned for the pressure-drop, the loss varied from .05 or .06 at 2 ins. to .035 at 6 ins. In this group the superheat was varied from zero to something over 100°, and for the distance 6 ins. the velocity-loss ranged from .043 to .033, decreasing as the superheat was greater. As might be expected, the results show irregular fluctuations, yet they are on the whole quite fairly consistent.

In interpreting these results, we note first of all that the deficiency in kinetic energy is about twice as great as that in velocity; thus if the actual velocity is 0.95 of the ideal, the actual energy will be 0.95^2, or 0.9025 of the total available energy. It appears, then, that with the diverging nozzle the jet is from 10 to 12 per cent. short on energy near the nozzle-end, while with the converging nozzle the shortage appears to be as much as 24 per cent. The meaning of the smaller values got when the plate is farther from the nozzle is that the jet picks up air from the surrounding atmosphere, with no loss, but rather a gain at first, in the momentum of the increased moving mass, even though there be a loss of kinetic energy. But these distant measurements are obviously of no value as showing the efficiency of the nozzle in producing a jet applicable to the turbine-wheel.

(*g*) Measuring the Pressure in the Jet.—A method of experimentation which leads to many interesting and some highly useful results is that of the exploring tube with a small hole drilled

Digitized by Google

at one point in its length, which is located in the axis of the nozzle and can be moved endwise so as to measure the pressure in the steam-jet at various points—the scheme having been described in § 28 (*e*), besides being outlined in Fig. 657, reproduced from Fig. 63. A large number of experiments have been made along this line, by Stodola and others, throwing much light upon the phenomena of jet-formation. A brief statement of the conclusions that can be drawn from these data is contained in the next three articles.

(*h*) ACOUSTIC VIBRATIONS.—When the jet discharges from a short converging or parallel nozzle, the pressure-ratio R_p ranging anywhere from 0.7 to 0.1, there is evident a strong tendency to set up acoustic vibrations. This type of wave-motion is linear, that is, backward and forward in the direction of its own progression, or here along the steam-current; and it shows itself in the establishment of alternating zones or transverse layers of higher and lower pressures, fixed in location under constant conditions, and giving the pressure-curve a wave-line form. The action absorbs some energy, diminishing that which is in the useful kinetic form.

If a diverging nozzle is so proportioned that the pressure in its mouth, reached by a continuous drop from p_1, is just equal to the discharge-pressure p_2, then the current beyond the nozzle is likely to flow smoothly and evenly. But if the nozzle is too short, so that the jet flows into an atmosphere of lower pressure, or if the nozzle expands too much, so that the pressure-variation within it is of the character typified in Fig. 657, the vibration tendency is strong.

There is here a contradiction, not reconciled by the information at hand (Stodola's curves): with a converging nozzle and $p_2 = 0.58p_1$, the jet flowing into its own pressure, vibration is shown; but with a diverging nozzle fitted to and discharging into a lower value of p_2, there is little or no vibration. That the velocity at p_0 (at the choke of the jet) is the same as the velocity of sound in the particular medium may have something to do with this—a question for the physicist. The subject has been, however, by no means fully mapped out, and we are not called upon to accept

Digitized by Google

conclusion that would make a stage with small pressure-drop less efficient, in this particular respect, than one with large drop. The important practical result is the strong testimony to the effectiveness of a properly designed diverging nozzle.

(*i*) DIFFUSER ACTION.—While the nozzle with a proper ratio of divergence delivers the jet of maximum efficiency, it is most essential that the nozzle be not carried too far, or expanded too widely, so as to set up the action represented in Fig. 657 and plotted from experiment in Fig. 64 (from Stodola). If the atmosphere on the discharge side is kept away from the jet and the latter flows forward within an enlarging channel, it will drop well below p_2, with the development of a correspondingly high velocity; but after the minimum pressure has been reached (depending on conditions not yet made determinate) there is a gradual rise of pressure, with retardation of the jet; and the final velocity, at the mouth of the long nozzle, is far less than that which would have been secured if the latter had been cut off at the point where p_2 was first reached, at CD in Fig. 657. Over-expansion of the nozzle is most decidedly to be avoided in the design of the turbine.

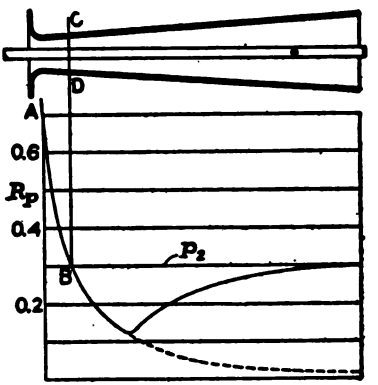

FIG. 657.—The Nozzle with too much Expansion.

(*j*) ENERGY-LOSS IN THE NOZZLE.—An indirect method of getting at the real velocity of the jet, less obvious than those discussed in (*e*) and (*f*) but rather more promising of reliable results, is based upon pressure-measurements along the nozzle. Having found by trial the exact rate of discharge from a certain nozzle, we can calculate how the pressure ought to vary along its axis, first with ideal adiabatic expansion, second under the assumption that the energy actually put into the jet is less than the ideal amount by a certain proportion. From these calculations, which give directly the cross-section at each pressure as in Fig. 46 or Fig. 48,

Digitized by Google

we can draw, on the nozzle-length as base, curves showing the manner of pressure-drop for zero, ten, twenty, etc., per cent. of energy-deficiency. By plotting the observed pressure across these curves, we can see just what is the energy-condition of the actual jet, and thence easily pass to its velocity.

Stodola gives an example by this method, fully worked out. He used the nozzle shown on Fig. 64, approximating 0.5 to 1.5 inches in diameter by 6.3 ins. long, with steam at 149 lbs., superheated about 30° F. At 11.5 lbs. abs. in the nozzle, about 4 ins. from the outlet, the observed pressure was just that for ten per cent. of energy-loss; at the outlet, where it measured 2.8 lbs. abs., it indicated a loss of about 18 per cent. The values found in Lewicki's tests are fairly consistent with the above results. Stodola concludes that for nozzles from 0.2 to 0.4 in. at the throat (sizes usual in De Laval practice) the energy-loss is likely to be from 10 to 15 per cent. In large multiple-stage turbines it would be much less, depending a good deal upon the smoothness of the surfaces. Friction is, of course, the chief source of this loss.

The weak point in the scheme just described is the difficulty of measuring the pressure with the desired degree of precision; also, it requires a forbidding amount of calculation, which can, however, be greatly facilitated by graphical methods.

(*k*) DEFLECTION OF THE JET.—Beyond the nozzle, very little has been done in the way of effective experiment upon the behavior of the steam-current; and it does not appear that any considerable part of the subject is open to detailed experimental investigation. There is room, however, for some very useful work in the examination of the action of a steam-current in a curved channel, to be carried out by a device analogous to the exploring tube. Nothing along this line has as yet been published.

In Fig. 634 I. the current is represented as if made up of a number of stream-lines or narrow ribbons, which flow together smoothly around the curve, the particles that were in a certain cross-section of the current at entrance occupying the same relative positions at exit, and the only accelerations involved being transverse or centripetal. It is easy to see that this ideal can be even approximately realized only when the stream is very narrow,

Digitized by Google

or its width only a small fraction of the radius of the curve; but the development of a rational and consistent idea of what takes place in a broad channel, like those between the blades in Fig. 616 for instance, is a very difficult problem.

If we could adhere to the steam-line hypothesis, the action might be somewhat as represented in Fig. 658 I., where the outer streams are crowded together on account of the centrifugal force of the whole current, which has been discussed in § 72 (*b*). A number of knotty questions now arise, as follows:

The outer part of the stream being compressed, what is the linear effect (along the current) of this increased pressure or stress within the steam-substance?

Will the outer and inner streams traverse their paths of different length in the same time? If so, how will the differences in velocity be produced? If not, will the streams slide on each other, so to speak?

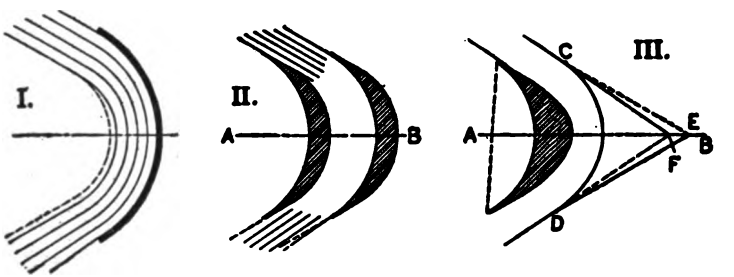

FIG. 658.—Behavior of the Jet in the Bucket or Vane-channel.

In what manner will uniformity of pressure throughout the current be established at exit?

Without trying to answer these, it is evident that the idea of "parallel" ribbons will have to be abandoned; then considering the stream as a whole, with the first part of the curved guide-surface cutting obliquely across the line of flow, we see that this surface will not only deflect the current (accelerate it transversely) but will also exert a component against the entrance velocity, producing a linear retardation. Instead of sweeping smoothly around the curve, the jet will pile into the bucket in a confused and tu-

Digitized by Google

multuous fashion, with a rise in the average pressure throughout the confiend space; and then from this broken and eddying stream the escaping jet will be again formed in a manner somewhat like that which prevails in the reaction turbine.

As to the direction of the outflowing jet, it will evidently crowd against the outer edge of the bucket-face, so as to be no longer tangent to the curve at this point, but rather to make a wider angle with the center-line AB. About all that can safely be assumed from theoretical considerations is expressed graphically by the stream-directions at entrance and exit as drawn in Fig. 658 II. In this connection refer back to the discussion in § 72 (*i*).

The influence of the considerations just set forth is seen in the later design of buckets for the Curtis turbine, approximately sketched in Fig. 658 III. The converging entrance is fitted to the crowding of the steam against the concave surface; beyond the narrowest point there is a channel of decreasing curvature, so that the centrifugal effect will grow less toward exit; and the slightly closer vane-angle on this side compensates for the tendency of the jet to swing outward. Further, the buckets are all enclosed radially by shrouding the blades, or covering their ends, so as to confine the higher pressure produced by the pile-up in the bottom of the bucket and keep it in line for the production of the escaping jet.

Referring to Fig. 623 we see much closer blades or narrower channels than in the single-impulse turbines in Figs. 616, 618, and 619, the need for maintaining a fairly perfect stream being so much greater when there are several velocity stages. The opposite extreme is seen in the exceedingly broad guide-channels of Fig. 627. With narrower channels, there will be more frictional loss, because of the relatively greater surface over which the steam must flow.

(1) STEAM FRICTION.—The idea naturally suggests itself that the losses of mechanical energy on account of the friction of steam-current on confining surfaces might be calculated from area, pressure, and velocity if only the coefficient of friction were known—following the line of the discussion, in § 28 (*c*), of flow in pipes. Such a calculation would be greatly complicated by the rapid variations in pressure and velocity over different parts of the surface; but the great obstacle is the lack of data as to the relation

Digitized by Google

between pressure and velocity on one hand and frictional resistance on the other. It is understood that the friction itself (force, not coefficient) varies almost directly as the pressure (or inversely as the density) and as the square or some higher power of the velocity; but the numerical relations remain to be determined, and it does not appear that their determination is at all an easy problem. An important and apparently well-established fact is the marked influence of superheat in diminishing steam-friction.

(*m*) ROTATION LOSSES.—Besides the friction of steam-current on metal, which absorbs a portion of the kinetic energy of the former before it has a chance to be effectively taken up by the turbine blades or buckets, there is another friction-action through which some of the energy of the rotor is wasted, namely, the friction of the rotor-surfaces upon the "dead" steam which, as an atmosphere, fills all the spaces outside of the path of the main working-current. This dead steam is not quiet, but is in more or less violent churning or whirling movements; and it is through this useless motion that the lost energy is changed back to heat and carried off in the exhaust.

The scheme for finding the amount of this loss is to revolve the rotor, or a part of the rotor, in a steam atmosphere like that which surrounds it in normal working. This is likely to give resistances a little too great, for the blades develop relatively much more "friction" than the disk-surfaces; and when the turbine is working some part of the blade-ring is always in the steam-belt, where the active current moves with the blades and churning action does not exist. A sample of the results got by this line of experiment is given in Fig. 659 (compare Fig. 692), where the steam-pressure about the wheel of a De Laval turbine is the base, and the effective power required to drive the wheel and gearing—motor input less electrical losses—is the abscissa. Lewicki's tests, already referred to, gave similar results.

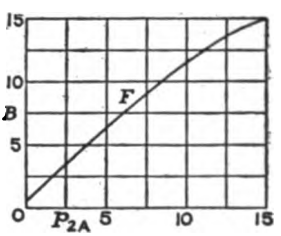

FIG. 659.—Total Rotation-losses in a 50-H.P. De Laval Turbine: see Test 402, Table 75 E. *B* = brake horse-power.

Digitized by Google

[illegible] data from disks for turbines [illegible] in systematic shape by H. Holzwarth [illegible] for January, 1907.

[illegible] the mechanical efficiency of the turbine in Table [illegible] supposed to be included, but [illegible] with the other steam losses.

[illegible]—Every turbine with more than one pressure-stage [illegible] steam-leakage—referring here to the leakage [illegible] stage to stage. In impulse-turbines of the cellular type [illegible] the shaft and partition-walls fitting closely [illegible] the opening for leakage is small—see Figs. 620, 621, 62[illegible] [illegible] turbines with drum rotors, typified by Fig. 629, [illegible] aggregate openings past the ends of the blades [illegible] the smallest clearances allowable, because the full [illegible] As a compensation, it is evident that [illegible] the first stages can yet do work at the low-pressure end, and where the pressures are low and the blades long [illegible] leakage becomes relatively very small.

The prevention of leakage is a mechanical problem, depending [illegible] and simplicity in design of rotor and casing [illegible] change of shape under heating will be avoided), and also [illegible] much influenced by accuracy in construction. The methods [illegible] leakage at stuffing-boxes, balance-pistons, etc. [illegible] in § 74 [illegible].

[illegible] the engine, it is practically impossible to separate [illegible] in the test of a turbine; but it is obvious that they [illegible] considerable magnitude, accounting for quite a share of the difference between ideal and actual performance.

[illegible]—By this is meant the width of the free space between the face of nozzles or distributors and the edges of the blades in a turbine; with the Riedler-Stumpf type of element this clearance is radial. The reason why small clearances have been found desirable in impulse turbines, besides the liability to entraining of the medium about the working current, is suggested by Fig. 648. If the stream flows around and along a cylinder in a helical channel, it will have a certain width; if the guiding walls still with the same circumferential distance between them, [illegible]

Digitized by Google

suddenly made parallel to the axis of the cylinder there will be an abrupt and decided increase in width. In other words, the current from an inclined nozzle or group of nozzles will tend to swing into a direction parallel to the axis, slowing down to fill the wider cross-section thus accommodated; and the need of preventing such action is one reason for running the blades close to the nozzle-mouths. In the reaction turbine, and on the discharge side of impulse blades, the line of flow is so nearly axial that width of clearance is of little or no importance.

(*p*) ANALYSIS OF TOTAL ENERGY-LOSS.—This brief presentation, contained in Arts. (*c*) to (*o*), is truly representative of the general state of knowledge of steam-action within the turbine, in that it gives much more information about the initial operation of forming the jet than about the behavior of the jet after it gets to work. The total energy-loss can be easily enough determined, and the data in Table 75 E show that the deficiency in actual output is somewhere near the same as in the engine, having a full range from 30 to 60 per cent. and a usual range, for ordinary good practice, from 35 to 45 per cent. The work of quantitatively analyzing this loss has been greatly hampered by the lack of some means of measuring the condition, or quality, or heat-content of the steam from point to point of its expansion: almost the only expedient available has been the measurement of pressure and a rough inference therefrom, after the manner set forth in Art. (*j*). Improvements in steam-calorimetry, especially the electric calorimeter perfected by Professor Thomas, which can accurately measure the quality of steam at any pressure, now give promise of a method which shall serve the turbine as effectively as the indicator has served the engine.

§ 74. Design and Construction of the Turbine.

(*a*) CROSS-AREA OF THE STEAM-CHANNEL.—In laying out an engine which shall develop a certain power, the principal step is to determine proper sizes for the cylinders, and the machine is then built up around these volumes. The analogous fundamental

Digitized by Google

determination in the design of a turbine is that of the channel (through nozzles and buckets) along which the working current will flow. The essential requirements are that this channel be of the right size to carry the necessary amount of steam, and that be properly graded in sectional area so as to permit and produce correct expansion of the steam.

From the known limiting pressures p_1 and p_2 the Rankine-cycle work per pound of steam can be found, as by means of Table XI. A reasonable value—say 60 per cent.—for the relative thermodynamic efficiency * being assumed, the probable effective work per pound becomes known and leads at once to the rate of flow required. The initial nozzles must pass this steam with the velocity due to the pressure-drop in the first stage—compare discussion of flow in § 73 (*c*). The successive critical points in the channel can be proportioned with reference to the initial section, the diagram of steam-expansion furnishing the needed ratios.

The simplest case is the one-stage single-impulse turbine (De Laval type), with but one nozzle, or group of nozzles, which can be laid out with sufficient correctness by means of the purely theoretical computations in §§ 24 to 26, where the shape of the ideal steam-jet is determined.

Next in order comes the many-stage single-impulse turbine, taken first with uniform vane-velocity, or with disks of the same diameter in all the stages. With stages of equal energy-value, the steam must reach the same velocity in each set of nozzles; then the areas of the successive cross-sections must increase just as does the specific volume of the steam in the current. This is illustrated in Fig. 660, where the broken curve BC corresponds with $B_1B_2 \ldots C_4$ on Fig. 653, each section of the curve showing adiabatic expansion in the nozzles of a stage, from an initial state determined by the total supply of energy to that stage—this total supply including the waste in the preceding stage. If the several discharge-velocities are equal, it is very evident that the sectional areas must be exactly proportional to the volumes G_1H_1, G_2H_2, etc.

The statement just made holds equally true for a multiple-

* See § 75 (*d*) for precise definition.

Digitized by Google

impulse turbine with disks of uniform diameter (Curtis type), so long as we consider only the initial action in each stage. But when there are vane-rings of differing diameter and velocity, so that the later stages must transform larger quantities of energy—see § 72 (*j*)—the relation of channel-area to specific volume will change with the vane-speed. That is, as the steam-velocity is increased the area needed for flow becomes relatively smaller.

These laws govern the reaction turbine likewise, both as to the relation between area and specific volume and as to the effect of changes in diameter and velocity.

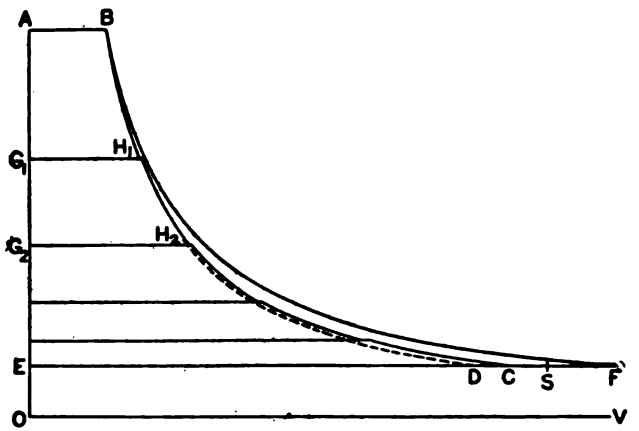

FIG. 660.—Pressure-volume Diagram for a Multiple-stage Turbine—compare Fig. 653.

In this elementary discussion we have passed over the secondary actions which are likely to modify the simple relations just set forth, though not to any very considerable degree. Thus on account of greater losses by leakage and friction at high pressure, it may be desirable to give the higher stages a little more than their true proportion of ideally available energy—in other words, to use higher jet-velocity in the upper stages, in comparison with the vane-velocity, than in the lower stages. In the Parsons turbine, on the other hand, it is usual to have nearly or quite the same effective area through all the vane-rings of a given size and depth (see Fig. 629); then within the group the manner of pressure-drop

Digitized by Google

will be such that the earlier stages will have a smaller energy-value than those toward the end.

The calculations for a diagram like Fig. 660 are rather complicated, becoming quite laborious with a large number of stages. They can be greatly simplified, however, by graphical methods in the entropy-temperature system. For these the reader is referred to more advanced works dealing with the thermodynamics of the turbine; but we have here added, as further illustrating general relations, the curve of constant steam-heat, BF. This represents what would take place if, in the free expansion of the steam, there were no effective abstraction of mechanical energy—a condition realized in a gradual or progressive throttling-action, where the energy of the jet is used up against friction as fast as it is developed. This curve of zero-efficiency is one limit; the other is the adiabatic BD, which implies the full abstraction of the available energy; and the actual curve of steam-condition, BC, lies between these. It is to be noted that BF runs out into the area of superheat, the saturation-curve from B coming to S. Superheat by "wire-drawing" has already been described in § 28 (*b*) and § 31 (*k*). Further, as just remarked, all these matters can be much more effectively represented and discussed by the entropy-temperature than by the pressure-volume method.

Some discussion of the action of the governor, which varies the supply of steam and thus the manner of pressure-variation throughout the turbine will be found in Art. (*k*).

(*b*) CHANNEL-VARIATION WITHIN THE MULTIPLE-IMPULSE STAGE.—What we have so far considered is after all nothing but a simple nozzle-problem, or a question of the flow of steam through orifices. To get a clear idea of what happens when there are several velocity-stages, or several rows of moving vanes and fixed guides in front of the nozzles, is a more difficult matter. It has already been pointed out in § 72 (*i*) that if the steam-velocity changes only by the combination of the vane-velocity with it—as in the various diagrams of § 72—the change in obliquity of vane-edges fitted to the velocities of entrance and exit will give the needed variation of area—compare Fig. 623. But because of the losses of energy and velocity on account of friction, shocks, and eddies, it has been found neces-

Digitized by Google

sary to use increasing radial depths, as shown in Fig. 621. If this is not done, the current will tend to "back up" in the channel, so that there will be a dropping pressure from nozzle to final exit, except as such an action is obviated through the sidewise diffusion of the current which may easily take place when there is partial peripheral admission; but any great amount of this spreading out into the dead spaces is bound to cause excessive eddy-losses.

(*c*) THE ROTOR of the turbine must have the proper form to carry the blades and the needed strength to resist the forces which come upon it, and must be as nearly as possible in centrifugal balance, so that its rapid spinning will not cause vibrations. Typical forms of rotor have been illustrated in § 71, and the matter of blade-fastening will be taken up presently. As to strength, the major stress is generally due to centrifugal force, although resistance to flexure by weight may become of first-rate importance in a long horizontal turbine. The tangential driving forces, due to the steam, are relatively insignificant.

High-speed turbines have rotors of disk form, which resist centrifugal force in a manner quite different from that of the thin ring, which has been discussed under fly-wheels, in § 36 (*i*). Without going into the complicated mathematics of the subject, we can get an idea of the conditions in a disk by considering Fig. 661. Suppose that a triangular element is cut loose along OA and OB, and moved outward in the direction OH, then all points on the radial edges OA and OB will have the same displacement from their original positions, but the displacement at C, for instance, will bear a much higher ratio to the arc CD than will that at A to the arc AB. With this simple geometrical illustration of the fact that a certain radial distortion (absolute, not relative) will have a much greater effect near the center than near the rim, we can easily see the reason for the following well-established facts:

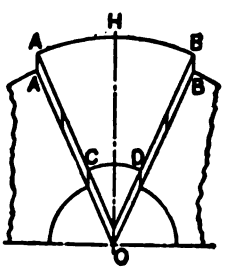

FIG. 661.—Diagram to Illustrate Stress in Disk.

Radial tension plays a very large part in resisting centrifugal force, acting to help the circumferential or ring tension.

Digitized by Google

The inner ring-elements of the disk are subject to very little centrifugal force; but the tendency of the triangular element to move bodily outward may and does cause higher stresses toward the center. In other words, an elastic enlargement of the rim corresponding to only a moderate circumferential stress would, if *there were no radial elasticity*, produce a destructive stress at the center. For uniformity of stress there must be radial stretch in coexistence with circumferential stretch of the inner rings.

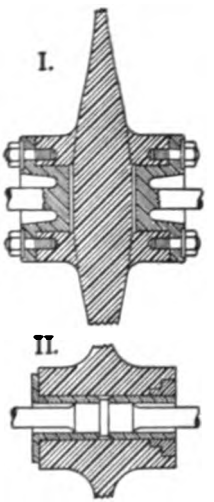

FIG. 662.—Sections of De Laval Disks. I. Rotor of Larger Turbines; II. Detail of Shaft-fastening in Fig. 617.

To get uniform stress, the disk must be thicker near the middle than at the rim—this needs the mathematical proof, however.

If the disk has a central hole there will be higher stress at the edge of the hole than at the rim.

These principles find their fullest illustration in the De Laval wheel. Note the long hub on the small wheel of Fig. 617, put on partly to compensate for the weakening effect of the hole. Larger wheels are made in the form sketched in Fig. 662 I.

The drum-rotor of the Parsons type of turbine resists its relatively much lower centrifugal force mostly by ring-stress. These hollow rotors can be more accurately balanced when of built-up construction than when cast in one piece, as in Fig. 630.

(*d*) BALANCING THE ROTOR.—The problem of bringing the center of mass to the rotation-axis is first one of getting the most perfect geometrical symmetry that is attainable with machine-tool appliances, and then of trying for and correcting the residual eccentricity by special experiment. To overcome the effect of the last of absolute perfection, and to avoid the need of very precise and expensive work in balancing, De Laval devised his flexible shaft, of which the action depends upon the following principles:

If an eccentric mass is attached to a rotating shaft, and the whole mass be thought of as concentrated at its center of gravity,

Digitized by Google

then the centrifugal force of this "particle" will act radially outward, tending to deflect the shaft in its own direction, and producing a pressure of shaft on bearings which constantly changes in absolute direction. This condition has been extensively discussed under Shaking-force and Counterbalance in § 40.

But when we consider the mass in its actual distributed state, there comes in another action which reaches considerable magnitude only at very high speeds. A spinning disk tends to get into the simple, stable state of rotation about its own center of mass—this tendency being closely analogous to that of the same disk to preserve one fixed plane of rotation, or to what is called gyroscope-action.

In the case of any nearly balanced rotating body, as the speed increases the eccentricity effect at first increases very rapidly, to a maximum at what is called the critical speed; then the other tendency predominates, and if the shaft is flexible or the bearings a little loose, the body will spin quietly on its true axis of symmetry.

At the speeds usual in large multiple-stage turbines, the degree of precision reached with good machine-shop work gives a sufficiently accurate balancing for practical freedom from vibration.

(*e*) BEARINGS FOR TURBINES.—In the characteristics of high speed but of a generally uniform load to be supported, the turbine is under conditions which belong rather to the electric generator than to the steam-engine, and the design of this part follows the lines of the former machine. At very high velocity, true alignment and geometrical perfection of the rubbing surfaces are of the first importance, as insuring a uniform distribution of pressure; and with these there must go ample lubrication, supplied by an oil-pump system. In turbines of any size the bearing-shell proper is solidly held in the framework of the machine, but has usually a spherical seating to permit self-alignment with the axis-direction. The bearing on the inner side of the De Laval wheel—see Figs. 617 and 664 I.—is free to move sidewise also; but a closer examination shows that this is not a bearing at all, in the sense of supporting the shaft, but serves rather as a stuffing-box. The pivot-bearing of the Curtis turbine is in many respects a special case, but it has been fully enough described in § 71 (*g*).

Digitized by Google

The design illustrated in Fig. 663 has several special features. It represents the smaller and quicker-running Parsons turbines, where some flexibility is secured by placing three thin cylinders between the inner and outer shells of the bearing; these are not tightly fitted, and the oil-films which form between them have a cushioning effect. The collar-bearing holds the rotor against end-wise motion, with the particular purpose of preventing side-contact and rubbing in the groove or labyrinth packing of the balance-pistons. The upper and lower halves 4 and 5 are separate, and are adjusted in opposite directions by micrometer set-screws on the lines S, S. The worm at the right drives a cross-spindle,

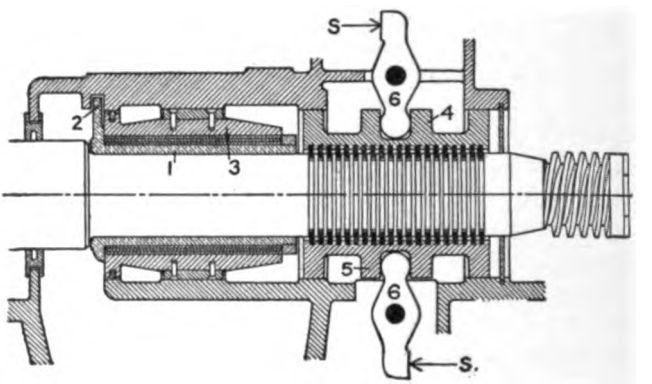

FIG. 663.—Bearing at Governor End of Westinghouse-Parsons Turbine—a Right-hand End of Fig. 629.

which carries a bevel-gear for the vertical governor, a small eccentric for the admission-valve mechanism (shown in Fig. 677), and a crank to drive the oil-pump.

(*f*) STUFFING-BOXES.—This name, derived from the engine and implying close contact and pressure of the packing upon the rod or spindle, is applicable to the corresponding part of the turbine as describing the function of preventing leakage rather than the manner of performing that function. Actual contact is used in a few cases; but the more generally accepted scheme is based on the idea of avoiding the contact of rapidly moving surfaces, while yet allowing but a very narrow (and frequently a very crooked) pas-

Digitized by Google

sage for the flow of steam. A number of special devices and methods are used, as will be made clear by the examples collected in Fig. 664.

Plain contact-rings are seen in Fig. 621; these rings are made of carbon, are held in place by brass skeleton-frames, are pressed inward by light helical tension springs, and bear upon a brass bushing on the spindle. Referring to Fig. 653, which shows typical conditions for a Curtis turbine, we see that this packing will have to retain a pressure of something like 45 lbs. above atmosphere; and with the multiple effect of a series of rings, leakage can be prevented with only a comparatively small contact-pressure. Another example of simple contact is given in Fig. 664 I., where air must be kept out when the turbine is running on vacuum. A passage can be opened only by the forcing out of the film of oil between journal and bearing, which would require more than a pressure of 12 or 13 lbs. per sq. in. There will evidently be, however, some tendency for the oil to work gradually into the steam-space.

The essential feature of the scheme shown at II. and III. in Fig. 664 is the annular space S_1, kept filled with steam of nearly atmospheric pressure by means of a reducing-valve from the steam-supply and a relief-valve to the condenser. There will be a gradual flow through the very narrow passage permitted by the sleeve at B, outward to S_1 at the high-pressure end, inward from S_1 at the low-pressure end of the turbine—all the "stuffing-boxes" being piped to form a common system. In effect, the turbine is surrounded by an atmosphere of steam at the points where leakage can occur; and then this steam-atmosphere is shut off from the air by lightly fitting segmental contact-rings, tied together by helical band-springs and pressed inward axially by compression springs which exert the force marked *F*. Oil is supplied at L. The design at III. adds labyrinth packing, both in the stuffing-boxes and between the wheel-chambers—compare Fig. 620.

A different idea is shown in Fig. 664 IV., which is used to prevent the leakage of air into a steam-vacuum. There is, of course, a fairly close running fit between the bushing B and the rings C, C; but the passage is closed or sealed by water in the annular space

Digitized by Google

about the collar D: this water has a dynamic pressure, acting radially outward, and produced by little vanes on the sides of D, which are formed like those on the "impeller" of a centrifugal pump. This arrangement has the further advantage that by circulating the water the stuffing-box is kept cool.

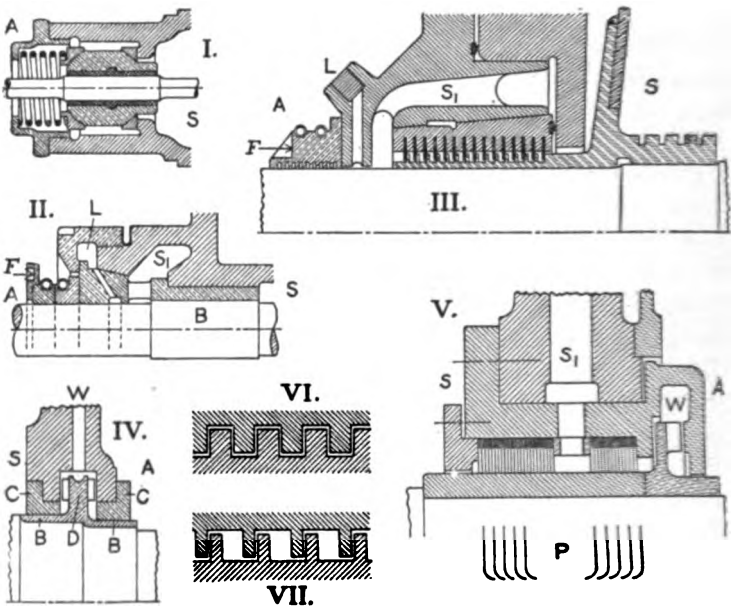

FIG. 664.—Packing Devices for Turbines: I. De Laval, from Fig. 617; II. Rateau, as in Fig. 620; III. Oerlikon-Rateau, late design; IV. Parsons, from Fig. 629; V. Sulzer, Fig. 630; VI., VII. Two types of Labyrinth Packing.

In V. the last two ideas are combined, together with a special form of labyrinth packing, made of thin brass plates. These plates or washers, only about .005" thick and separated by narrow rings of thicker plate, are bent or flanged where they touch the shaft, as shown by the enlarged detail below the main sectional view.

Labyrinth Packing.—This device, having its most important application in the prevention of internal leakage, takes the two typical forms shown at VI. and VII. in Fig. 664. The first merely

Digitized by Google

provides a tortuous passage for the steam, of nearly uniform cross-sectional area; the second and more effective form adds the further retarding influence of abrupt changes in the area of the channel. The "comb" type in V. has the advantage that it fits a plain cylindrical bushing on the shaft, but looks as if it might degenerate, in service, into something not much better than the plain sleeve in II.

(*g*) NOZZLES AND DISTRIBUTORS.—As regards the construction of these parts, one typical method is represented by the De Laval nozzle, which has the form given it by the operations of turning, drilling, and reaming. It is held in place by friction (plus the steam-pressure) and can be pulled out by means of a withdrawing tool that screws over the inner end. The Riedler-Stumpf nozzles are likewise made singly, but after machining are pressed to a rectangular shape toward the mouth, and may also be bent to fit certain holding devices, as in Fig. 624 V.

FIG. 665.—De Laval Nozzle, with Shut-off Valve.

The high-pressure nozzles of the Curtis turbine, with the profile in Fig. 623, are formed in the casting by means of cores, then filed

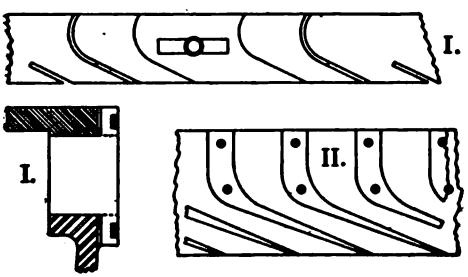

FIG. 666.—Built-up Nozzles. I. Zoelly Design, Fig. 619; II. Type of Sulzer, Union, Elektra, etc.

out smooth; they are round in the throat, changing to a rectangular section toward the mouth. The low-pressure distributors, shaped like those in Fig. 618, are made of pieces of ordinary soft

Digitized by Google

sheet-steel, which are set in the cores and cast right into the diaphragms. For the last stage in Fig. 621 the nozzle-ring is of full circumference, and the cross-struts are raised above the nozzle-plates.

A more expensive but more precise method of construction for distributors of the curved-plate type is shown in Fig. 666 I. Inclined slots are milled (sawed) in the rim of the diaphragm-wheel and the edge of the cover-ring, and the straight part of the division-plate has projections which go into these slots and are held by light retaining-rings. On the cross-struts are short tenons to resist the steam pressure-difference on the diaphragm. The analogous construction of nozzles for large pressure-drop is indicated at II.; the partition-pieces are fastened between cylindrical surfaces in an axial-flow turbine, between plane surfaces when the admission is radial.

(*h*) VANES OR BLADES.—There is a wide variety in the form of these essential working parts, and a few typical examples will now be given. The De Laval buckets, Fig. 667, are drop-forged from fairly hard steel and machined on the contact surfaces, their small number permitting this rather expensive method. The steam-surfaces are left with the forge-finish, except that the entrance edges are ground sharp. A dovetail fastening is used to resist the very high centrifugal force on the blade, and the form is such that any single blade can be removed without disturbing the others. To minimize the possible damage from a bursting wheel, the disk is cut thin just inside the rim, with the idea that the latter will fly off in small pieces before the whole wheel will burst from overspeeding.

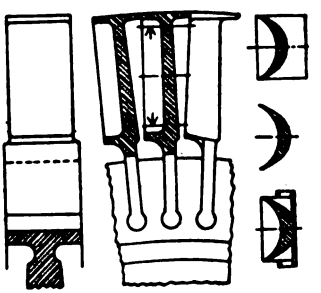

FIG. 667.—De Laval Turbine-blade.

Two other designs using the dovetail fastening, but intended for force-conditions (due to speed) less severe than those in the De Laval turbine, are shown in Figs. 668 and 669. Here the blades are made from drawn and polished bars of high-nickel steel, and

Digitized by Google

the most important difference between the two schemes is seen in the method of spacing the blades. Distance-blocks, cut from a

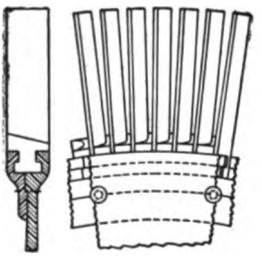

Fig. 668.—Zoelly Blading.

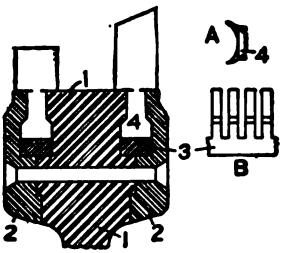

Fig. 669.—Sulzer Blading.

properly-shaped bar and machined with the blades so as to fit the dovetail slot, are used in the first case. In the second there is a spacing-ring, shown especially at B: the roots of the blades are hot-pressed and flattened, as best made evident at A, and will then slip into sawed slots in the ring 3.

The use of blades formed from rolled plate by bending and pressing is seen in Fig. 670, together with the free use of rivet-fastening, and with a shroud-ring to cover the outer ends of the blades, spacing and steadying them. Essentially the same construction is used also for the distributors of the Rateau turbine.

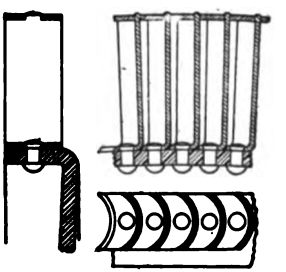

Fig. 670.—Rateau Blading.

In some designs of the Curtis turbine the blades are cut from the solid metal of the wheel, as shown at I. in Fig. 671. The cutting-tool travels on a circular path, the tool-bar either turning continually or having a back and forth rotation; in either case, this bar must be drawn backward in the direction of its axis during the idle part of the movement, so that the tool will clear, then advanced for the cutting-stroke. This method does not, however, give a very effective profile to the vanes, as can be seen by comparison with Fig. 649. It is much more usual to make the blades from metal

Digitized by Google

bar of proper shape, and two schemes for holding them are sketched at II. and III. In the first case the blades are cast into the segment of base-ring, being held in a core-sand facing which forms one side of the mold; they are made of a brass composition soft enough to fuse into solid union with the ring. Sketch III. shows a simple dovetail fastening, with distance-blocks as in Fig. 668, and very easy to apply when the holding-rings are made in a number of short segments, as is the usual practice.

The method which has been most used for holding the blades of the Parsons turbine is sketched in Fig. 672. The blades are cut to length and simply set into the grooves, with distance-blocks of proper profile between them. These blocks have parallel sides

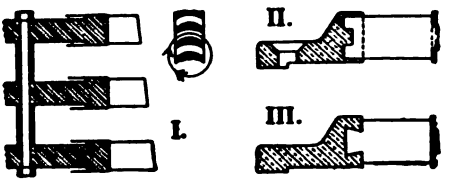

FIG. 671.—Curtis Blading.

(vertically), but are made of a soft metal; and after a whole ring has been filled, the blocks are calked, by means of a tool which reaches down between the blades, and are thus pressed out, more or less perfectly, into the dovetail slot. To give a better grip on the blade, a couple of notches are made in the back of it, into which the metal of the block will be forced. The blades in the casing are held in the same way, except that plain slots are used, not dovetailed. The ends of the blades are left free, but the very long blades of the low-pressure stages must be braced against the tendency to get into vibration. One scheme is to cut a slot in the entrance sides and solder in a wire ring, as at A in Fig. 672: to obviate undesirable effects of expansion this ring will be made in several separate segments, instead of being continuous all the way around.

The scheme shown in Fig. 673, used in this country by the Allis-Chalmers Company, has a spacing and holding ring, with slots of special form into which the ends of the blades fit: these ends are

Digitized by Google

pressed into dovetail form, so that the blades are securely held. A narrow locking-ring presses the main ring into the dovetail; and on the rotor R this extra ring is calked into a little side groove. The shroud-ring, of channel-bar section, holds the blade-ends securely, and can be accurately turned off, so as to make the running-fit uniform and as close as is permissible, this minimizing leakage.

(i) WEAR ON VANES.—The blading is the weak point in a turbine, because it is the part most liable to rapid wear and deterioration. A steam-jet of very high velocity exerts considerable erosive action, greater if the steam is wet than if superheated, and especially aggravated when particles of solid matter are present, as when boilers prime on dirty water. Precise information along

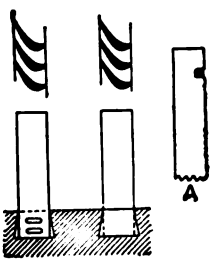

FIG. 672.—The Standard Parsons Blading.

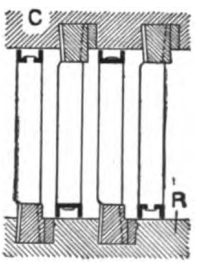

FIG. 673.—Willans-Robinson Blading for Parsons Turbines.

this line is rather scarce, and it remains to be seen how these working-parts of the turbine will compare in durability with the cylinder- and valve-surfaces which occupy a similar position in the economy of the engine. The inherent probability and the weight of experience over the short period during which turbines have been in use seem to be in favor of the engine.

The materials used for blades or vanes range from various brass or bronze compositions, through common low-carbon steel, to a nickel-steel with so high a proportion of nickel that it will be practically rustless. The Parsons type with its tremendous number of blades calls for material that can be easily worked, and with its low steam-velocity permits a comparatively soft material.

Digitized by Google

The blade-bars, of a suitable alloy (yellow metal), are generally made by the "extruding" process, semi-fluid metal being forced out through a die and cooled to a solid as it issues—after the manner long used in the manufacture of lead pipe. The turbines with fewer blades and higher velocities require harder materials, but can stand a higher cost per unit part.

(*j*) GOVERNORS AND CONTROLLING-VALVES.—For the first example under this heading we will consider the apparatus belonging

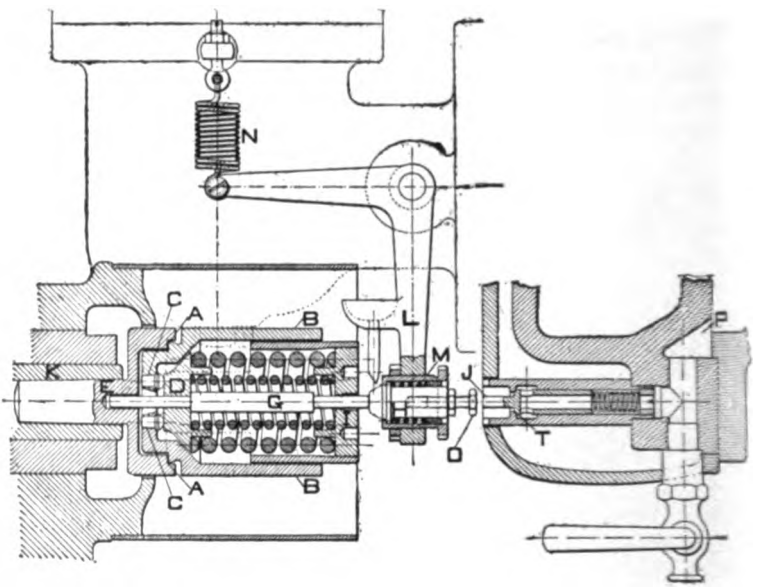

FIG. 674.—De Laval Governor and Vacuum-breaker.

to the De Laval turbine, illustrated in Figs. 674 and 675. An external view of the governor appears at H in Fig. 617, which shows how it is carried on the end of the power-shaft. The centrifugal weights, hollow semi-cylinders in form and marked B, B on Fig. 674, have knife-edge bearings at A, A, in the shell C As the weights swing out, they push the block D to the right against the spring, the fixed abutment I for the latter being screwed into

Digitized by Google

the outer end of C. In normal running the spindle G moves the lever L, against the light spring at N, and thus raises and lowers the double-disk throttle-valve shown in Fig. 675. Since the valve may not be tight even when down on its seat, additional security against a runaway is provided for in the vacuum-breaker. At an excessive speed the spindle G can move H in the lever L, compressing the spring M until D pushes J inward; this opens the valve at T, admitting air to the exhaust-chamber, and thus checking the wheel by friction.

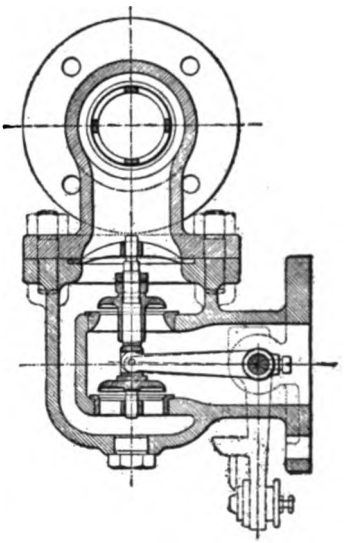

Fig. 675.—De Laval Governor-valve.

The scheme of hand-regulation, whereby the number of nozzles in service is accommodated to the load, has been described in § 71 (*c*), under Fig. 617; and a self-acting nozzle-valve of recent introduction is given in Fig. 679.

The Parsons Valve and Governor.—Fig. 676 shows the detail of the main controlling-valve of the Westinghouse-Parsons turbine, corresponding with V_1 in Fig. 629. This valve is not held fast by the governor at the particular height which will make the opening just large enough, but is given a continuous oscillating movement, so as to admit the steam in puffs. The governor mechanism, outlined in Fig. 677, moves the little pilot-valve F, which opens and closes the exhaust-port E. When E is closed, steam coming through A lifts the piston C, opening the valve; when E is open the steam escapes from the cylinder more rapidly than it can get past the adjusting valve B, and the spring H pushes the valve down. Piston G has a dash-pot action, while lever K is for opening the valve by hand, so as to prevent sticking fast when the turbine is standing idle. Under light load the valve V_1 is shut during the greater part of the oscillation-period; with heavy load the oscillation may entirely disappear because valve F will not open

Digitized by Google

port E at all. The steam passing through this controlling system need not be wasted, but can be returned to the turbine at a

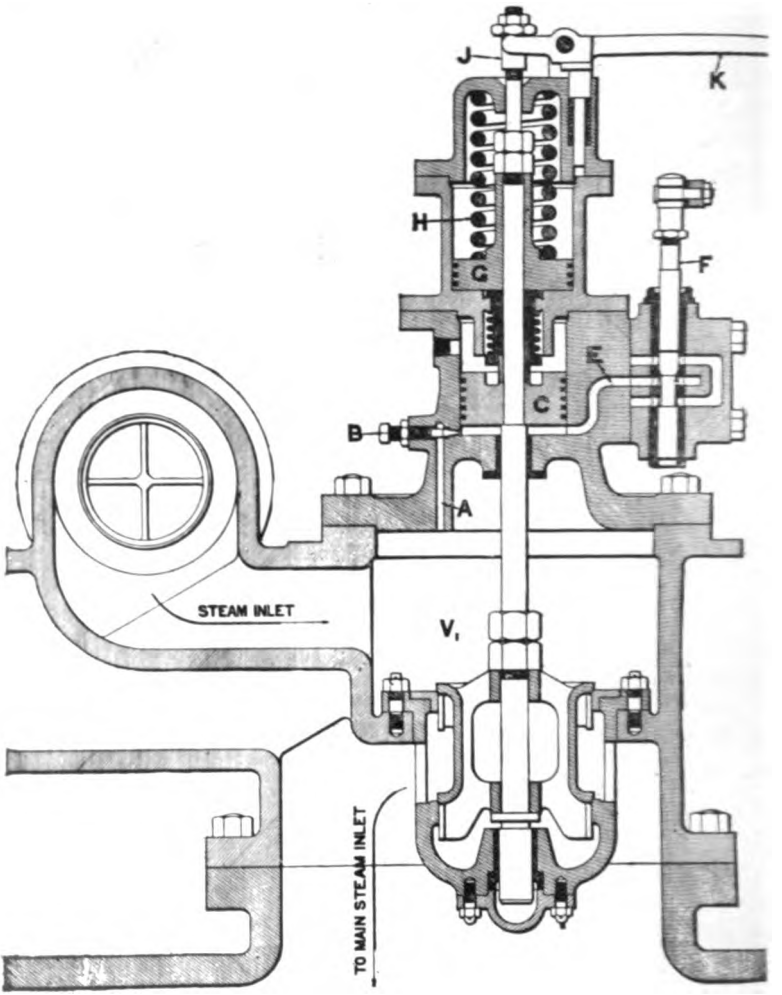

FIG. 676.—Parsons Admission-valve and Controlling-mechanism. Compare Fig. 629.

lower-pressure point. The by-pass valve for overload. V, on Fig. 629, is actuated by steam in the same manner, but

Digitized by Google

its pilot-valve is given only a simple displacement, without oscillation.

The governor-mechanism is sketched in Fig. 677. The eccentric E is on the same spindle with the wheel driven by the worm shown in Fig. 663, and the lever 1 is oscillated once to every so many revolutions, say 5 or 6, of the rotor. The governor being at one end of the machine, piece 3 takes the form of a long rod or shaft, with arms keyed to it. The function of the governor is simply to raise and lower the fulcrum A.

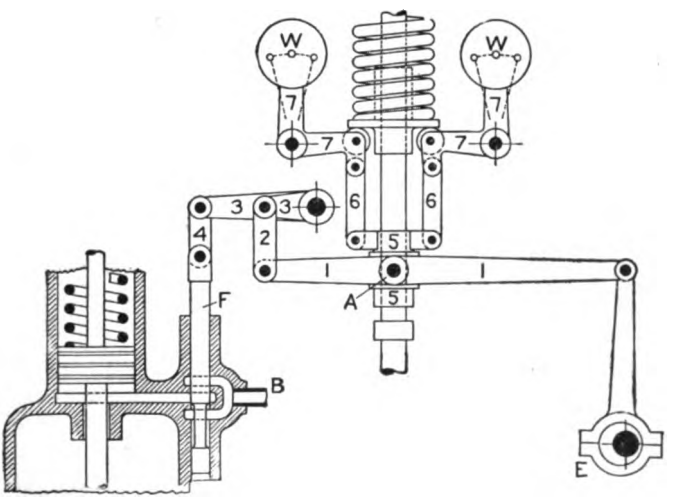

FIG. 677.—Outline of Governor and Valve-gear, Westinghouse-Parsons Turbine.

This same scheme, with variations in mechanical detail only, is used on the various makes of Parsons turbines, and has been adopted by Sulzer Bros. also, according to Stodola. Other inventors, as Rateau and Zoelly, have used plain throttling. It does not appear that puff admission has any very great advantage over steady throttling. Of course, most of the steam goes through when the pressure is high, and works therefore under the conditions favorable to good performance; but to neutralize this there are

Digitized by Google

alternate accelerations and retardations of the whole steam-current which must be harmful. No statements or diagrams have been published as to whether and in what degree these pulsations extend through the turbine to the low-pressure stages. One merit of this scheme is that the valve is never likely to stick fast so that the governor will lose control of the turbine.

The Curtis Admission-valve.—As stated in the general description, § 71 (*g*), the Curtis turbine is controlled by the opening of more or fewer of the nozzle-valves. The scheme used on the machine in Fig. 621 is shown in Fig. 678 I. The governor operates a hydraulic cylinder which is essentially equivalent to the device in Fig. 562. self-centering-valve and all, but with the piston moving. From the cross-head comes the rod H, which turns the cam-shaft B; and the cams along this shaft, one to a valve, are set in series, each a little later than the preceding one, or a certain number of degrees behind it. Under any particular load there will be a number of valves wide open, one partly open, the rest closed; the single valve that is just in the act of opening for any position of the cam-shaft gives the close gradation of power.

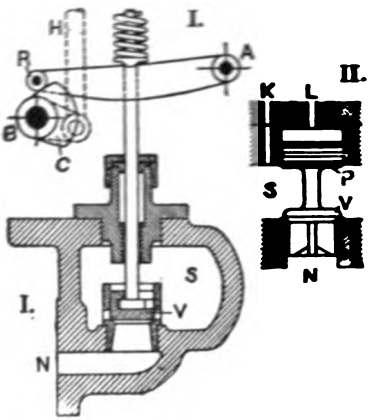

FIG. 678.—Nozzle-valves for the Curtis Turbine.

In most Curtis turbines, however, steam-actuated valves have been used, according to the scheme at II. in Fig. 678. The governor moves a series of small pilot-valves, one of which determines whether steam of full pressure shall be admitted above the piston P or whether this space shall be opened to exhaust. In the latter case the valve will be lifted, because the piston is larger in diameter than the valve-disk. The pilot-valves are generally moved by a cam-shaft like that here used for the main valves; and magnet-lifts have also been employed.

Digitized by Google

Self-acting Valves.—In Figs. 679 and 680 are given a couple of examples of valves operated by pressure-differences which arise within the turbine. Fig. 679 is a recently adopted scheme for the De Laval turbine. With full pressure in the valve-chamber, the grooved plunger is pushed to the left against the spring; but when the governor throttles the steam, the spring-force predominates and closes the valve. The inter-stage valve in Fio. 680 has already been explained, as to purpose and action, under Fig. 621.

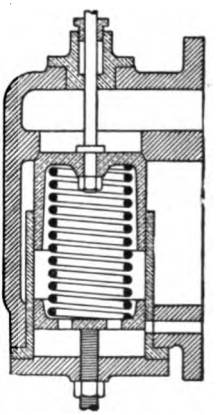

FIG. 680.—Automatic By-pass Valve for Curtis Turbine; enlarged from Fig. 621.

(*k*) EFFECT OF GOVERNOR-ACTION.—There are two typical methods of governing the tur-

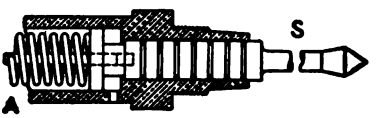

FIG. 679.—Self-acting Nozzle-valve for De Laval Turbine.

bine, the first by throttling (with puff-admission as a special phase), the second by varying the number of nozzles open to steam. The question presents itself, What is the effect of a change from normal load, and is the effect different under these two schemes? As characteristic of normal-load running, we assume that in all the stages the steam-velocity bears the same ratio to the vane-speed, according to § 72 (*j*), and that the final drop to exhaust-pressure just gives to the last stage its proper share of energy. The chief determinant of this action is the manner of variation of the channel-section, as pointed out in Art. (*a*), and at each point along the channel there will be a characteristic normal pressure, with which the local pressure under changed conditions may be compared.

The most obvious result of a decrease in the amount of steam admitted is to lower the local pressure all along the line, while an increase will raise it. This will give the last stages a smaller proportion of the total energy-development at light load, a larger share at heavy load. Under very light load the exhaust-pressure tends

Digitized by Google

to creep up into the turbine, the gradient through the last stages being only enough to maintain the flow; under heavy load, high pressure backs up toward the entrance.

Now plain throttling, which cuts down the steam-pressure at entrance, tends to keep the division of work among the stages more nearly equal at light loads—while diminishing, of course, the total energy available. The cut-off method admits steam at full pressure, but it has a big drop through the initial stage, and thereafter the local pressure will be about the same as with the first manner of control. The advantage of the second method depends upon the ability of the first stage to absorb effectively the relatively large energy made available for it; but since such a capability will always exist to some degree, it seems that the scheme of having all the pressure-drop within the turbine itself is inherently better than that of allowing a considerable part of the drop to take place in the governor-valve. Puff-admission acts in somewhat the same way as cut-off control, in that most of the steam enters at high pressure as just pointed out under Fig. 577. It has been suggested that control valves be applied to the successive nozzles in few-stage turbines of the Curtis type, but this idea has not yet been extended beyond the one interstage valve on Fig. 621. The intermittent action of the Parsons type requires the fly-wheel effect of the heavy rotor for the maintenance of steady speed.

APPENDIX TO CHAPTER XII.

THE ROTARY ENGINE.

AN immense amount of invention and ingenuity has been expended upon the problem of devising a machine in which the static-pressure cycle could be applied to a rotating instead of a reciprocating working-element. Inherent difficulties of the first magnitude have kept these efforts from success, while the advent of the turbine has satisfied the demand which they were intended to meet. A description of the various rotary engines that have been patented would belong rather to the study of mechanism than to practical steam-engineering; and to illustrate the general principle of action we shall use but the one simple type outlined in F

Digitized by Google

In this machine steam enters continually at S and escapes at E, only a plain throttle-valve in the inlet-pipe being needed to control the flow. Sliding vanes or pistons, P, P, P, project from the rotor R and touch the casing C, furnishing the moving surface upon which the working steam-force acts. Some simple contrivance, such as a circular groove in the ends of the casing and projections on the vanes, must be added in order to keep the latter out against the casing.

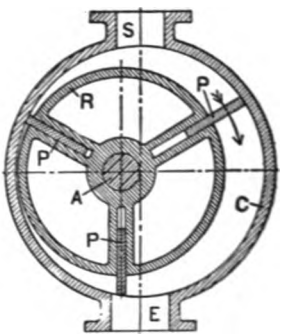

FIG. 681.—Outline of Typical Rotary Engine.

This particular scheme has the fault that it makes absolutely no provision for expansion of the steam below the inlet pressure, which puts it in a class with the small direct-acting steam-pump. Better inventions have met this requirement to some degree, although far less effectively than the piston-engine. But the great and determining drawback has been the inability to hold steam, or the tendency of the machine to excessive leakage. The circular piston, moving in its cylinder with a broad contact, is the simplest possible working-element for the static-pressure cycle, and it is hard enough to keep the piston tight. The rectangular vane, with narrow contacts and variant rubbing-speed at different points of its perimeter, cannot be made and kept steam-tight; and there is a further chance for leakage between the ends of rotor and casing. As regards thermal wastes, it is evident that a considerable portion of the metal surface which the steam touches is exposed alternately to high and low temperatures. Further, since the machine develops its power by the combination of a small driving-force with a high velocity, the rubbing-friction due to an attempt to keep the piston tight will absorb an excessive amount of power. These unavoidable bad features have completely overshadowed the advantages of compactness and freedom from shaking-force.

Digitized by Google

CHAPTER XIII.

STEAM-ENGINE PERFORMANCE.

75. Steam-test Tables.

List of tables in § 75:

A. Tests of Simple Engines..... Pages 608 to 611
B. Compound Engines, High-speed Type..... Pages 612 to 615
C. Multiple-expansion Engines, Corliss Type.. Pages 616 to 619
D. Pumping and Marine Engines..... Pages 620 to 623
E. Tests of Steam-turbines..... Pages 624, 626, 627
F. Engine and Generator Efficiencies..... Page 625
G. Mechanical Efficiency of Engines..... Page 628

(*a*) THESE TABLES set forth, in condensed and concentrated form, the results of a large number of tests of engines and turbines covering the whole range of steam-engineering practice. Published reports vary widely as to fullness of detail, but here only the more important data are given, such as are available in almost every case. It will be noted that the derived results on the last page of each table are concerned wholly with the thermodynamic side of the subject. Fuller information, having to do partly with the engine alone, partly with the other members of the plant also, would lie along several lines, somewhat as follows:

I. On the mechanical side of the steam-action,
   (a) Pressure-losses from boiler and to condenser;
   (b) Receiver-pressures and losses between cylinders;
   (c) Division of work among the several stages.

II. On the thermodynamic side,
   (a) Indicated steam-consumption and cylinder-condensation;

Digitized by Google

(b) Jacket pressures, and the different amounts of jacket-discharge;

(c) With superheated steam, temperatures at various points in the progress of the steam;

(d) Temperatures of hot-well discharge, of jacket-discharge, of condensing water, and of feed-water.

III. As to the performance of the machine,

(a) The mechanical efficiency, to the output point.

Division I. is best covered by the combined diagram, which also illustrates II. (a)—see § 69. The ratio of indicated steam to actual was the last item dropped when compressing the main tables into the limits of space available; some representative values are given under the figures in § 69. The rest of Group II. is desirable when a close study of the thermodynamic detail is to be made, but is not necessary for a determination of total or resultant performance. Supplementary data as to III. will be found in Tables F and G.

(*b*) THE TABLE-HEADINGS.—The first two pages of each table give general information about the engine and the source of data. The cylinder-dimensions are in inches, nominal sizes; metric dimensions are expressed to the nearest tenth of an inch. The "Ratio" is that of the largest to the smallest cylinder-volume (or stage-volume), passing over the intermediates in a triple or quadruple engine. Similarly, the clearances given are those in the first and last cylinders when there are more than two stages. The "Year" shows when the test was made; the authority, under "Reported by", is generally the person who conducted the test; a dash after the name shows that other persons joined in the presentation. The abbreviations under "Reference" have the following meanings:

A. S. M. E.	*Transactions American Society of Mechanical Engineers,*	Vol. – page
ENG.	*Engineering* (London) Half-year	vol. – page
ENG'R	*The Engineer* (London) Half-year	vol. – page
E. R.	*Engineering Record* (New York)	Date – page

Digitized by Google

STOD. Stodola's *Steam Turbines*,
II. E Second Edition, English.
III. G Third Edition, German.
Z. V. D. I. *Zeitschrift des Vereins deutscher Ingenieure*, Year – page.

The letter *q* before a reference means that this account is quoted from some earlier publication.

(*c*) GENERAL CONDITIONS, POWER, AND STEAM-CONSUMPTION.*

SECTION 1 OF ENGINE TABLE.

No.	CONDITION	N	V	p_{1A}	p_{2A}	ϵ	r	p_m	H	S_H	J

(For differino portion of Turbine Table, except CONDITION, see Art. (*e*), page 606.)

No. A number is given to each engine; the decimal figures designate different tests of the same engine.

CONDITION. By a condensed notation a number of important general conditions of the test are stated, as follows:

First letter—condition of steam:
T = saturated steam;
P = superheated steam.

Second letter—kind of exhaust:
A = atmospheric exhaust, or non-condensing;
C = condenser or vacuum exhaust.

Numeral—number of stages in the expansion.

Third and fourth letters—condition as to jackets and heaters:
J = jackets in use;
H = reheater in receiver in use;
N = no jackets or heaters.

If either J or H is given alone, absence of the other type of heating device is implied. Subscripts under J indicate that only certain cylinders are jacketed—1 for first cylinder, 2 for second, etc.

* Discussed in § 76 (*a*) to (*e*).

Digitized by Google

Last letter—manner of measuring steam-consumption:

F = feed-water weighed or measured;

M = feed-water metered;

C = steam condensed and weighed.

In Table E, for the Steam-turbine, the first two letters and the last under CONDITION have the meanings just given; the third letter shows the manner of loading:

B = brake loaded;

E = electrically loaded.

(Note.—To facilitate the reading of reports in the metric system, the reduction ratios of the important units are given under the definitions.)

N Speed in revolutions or double-strokes per minute.

V Piston speed in feet per minute.

(1 meter per sec. = 196.7 ft. per min.)

p_{1A} Initial pressure in pounds per square inch absolute.

In most cases this is the pressure at the boiler; it should be, and where known is, the pressure at (that is, just before) the throttle-valve.

(1 kg. per sq. cm. = 14.22 lbs. per sq. in.)

p_{2A} Absolute pressure of the exhaust, either of the atmosphere or in the condenser, in pounds per square inch. In the locomotive or when the exhaust-steam is used for heating, this pressure will be above atmosphere. See § 76 (*b*).

In reducing vacuum readings, 1 lb. per sq. in. = 2.035 ins. of mercury

(57.1 mm. of mercury = 1 lb. per sq. in.)

e Apparent cut-off in high-pressure cylinder, or fraction of stroke completed at cut-off, not counting the clearance.

r Ratio of expansion, or ratio of the final full volume of the low-pressure cylinder to the volume back of the high-pressure piston at cut-off, clearance being taken into account. If R is the cylinder-ratio and i_1 and i_2 the clearances as given above,

$$r = \frac{R(1+i_2)}{e+i_1}. \quad \ldots\ldots \quad (441)$$

Digitized by Google

p_m The mean effective pressure reduced to the low-pressure piston after the usual manner—see § 23 (*c*), Eq. (111).

H Indicated horse-power.
(1 metric H.P. = 0.9863 English H.P.)

S_H Steam per horse-power hour, in pounds; this is intended to be the actual steam-consumption, not corrected for moisture or superheat and including all steam used in jackets or reheaters.
(1 kg. per met. H.P. = 2.235 lbs. per Eng. H.P.)

S Total steam used, pounds per hour—in the plots of tests, Figs. 688 to 698.

J The fraction of the total steam that is used in the jackets and reheaters. A dash placed in this column indicates the absence of this quantity from the test.

(*d*) THERMODYNAMIC PERFORMANCE.*

SECTION 2 OF ENGINE AND TURBINE TABLE.

m, t_s	t_2	q_H	h	Q	W	w	W_R	E_A	E_R	ζ_R

m Fraction of moisture in steam received by engine.

t_s Degrees (Fahrenheit) of superheat, at engine when so given, otherwise at superheater.

t_2 Ideal feed temperature, or steam-temperature corresponding to the exhaust-pressure p_{2A}. It is assumed that with a complete and perfect feed-heater the engine could deliver feed-water at the temperature of the exhaust-steam.

q_H Number of heat-units (B.T.U.) added to the feed at t_2 by the hot water from the jackets and other heaters, or the heat contained in the weight J (fraction of one pound) of this water over and above its heat at t_2. In most cases the water from the jackets is supposed to have the full temperature t_1, corresponding to the pressure p_{1A}; in the more complex engines some of the heaters have lower pressures, and

* Discussed in § 76 (*f*) to (*m*).

Digitized by Google

q_H is calculated on this basis. It diminishes the heat required to make one pound of steam, and is therefore marked with the minus sign.

h Effect of moisture or superheat on heat of steam-formation. With moisture-fraction m,

$$h = -mr_1, \quad \ldots\ldots \quad (442)$$

r_1 being the latent heat at t_1. With superheat t_s,

$$h = +ct_s. \quad \ldots\ldots \quad (443)$$

For value of the specific heat c, refer to § 76 (*f*).

Q Heat of formation of one pound of steam of actual quality under ideal feed conditions. If Q_0 is the heat of formation of one pound of dry steam at p_{1A} from water at t_2, then Q is the algebraic sum of Q_0, q_H, and h. See § 76 (*g*).

W The effective work per pound of steam, measured in heat-units, or the heat transformed into useful work per pound of steam. One horse-power-hour being 1,980,000 ÷ 778 = 2545 B.T.U.,

$$W = 2545 \div S_H. \quad \ldots\ldots \quad (444)$$

w Correction to be made in output, with Rankine Cycle, on account of moisture or superheat in steam received by engine. See § 73 (*a*), Eqs. (430) to (434), and § 76 (*j*).

W_R Effective output of Rankine Cycle, per pound of steam of actual quality, measured in heat-units. See § 73 (*a*). It is the value from Table XII for p_{1A} and p_{2A}, corrected by w.

E_A Absolute thermodynamic efficiency for the engine alone, not including the (actual) feed-heating system. It is the ratio of effective output of the steam-cycle to the heat received, so that

$$E_A = W \div Q. \quad \ldots\ldots \quad (445)$$

E_R Relative thermodynamic efficiency, with the Rankine Cycle as the standard of performance:

$$E_R = W \div W_R. \quad \ldots\ldots \quad (446)$$

Digitized by Google

Q_M Heat supplied per horse-power-minute, which is a frequently used measure of engine performance. Since $33000 \div 778 = 42.42$ B.T.U.,

$$Q_M = 42.4 \div E_A. \quad . \quad . \quad . \quad . \quad . \quad . \quad (45)$$

(1 calorie = 3.968 B.T.U.
1 cal. per met. H.P. = 4.024 B.T.U. per Eng. H.P.)

NOTE.

Where the data are printed in italics it means that the values were not determined (or given), but have been assumed as a basis for calculation.

A blank in any column shows that the quantity was not determined; except that a dash under J and a blank under q indicates the absence of jacket-action from the test.

Many of the values in the tables were computed with one more decimal place than shown, notably Q and E_t; but the numbers given are amply accurate for any practical significance, especially in view of the degree of precision of the data from which they are derived.

(*e*) EFFICIENCY DATA.—The performance of the piston-engine, Tables A to D, is all expressed in terms of indicated rather than of effective or brake horse-power; the latter is commercially the more important, but in the majority of the tests was not determined. When we come to the turbine, however, only the effective power, sometimes brake horse-power, more often electrical output, can be directly measured. To get a basis of comparison it is necessary to reduce this to the work of the steam on the rotor by assuming efficiencies. In Table E this is done, while a lot of data from engine-generators is given in Table F, which is sandwiched into Table E as being most intimately connected with the latter. Some further data as to mechanical output is gathered into Table G.

The symbols used in Tables E, F, and G, and not already defined, are as follows:

B Brake horse-power, or effective mechanical output of engine.
D Dynamometer horse-power (for the locomotive).
K Electrical output in kilowatts.
P Pump horse-power.

Digitized by Google

E_M Mechanical efficiency, B/H.

E_E Electrical efficiency, of generator alone.

E_C Combined efficiency of engine and generator, $E_M \times E_E$.

E_P Efficiency of pumping-engine, P/H.

K/H This ratio is the product of E_E and the electrical horse-power factor 0.746, and serves for the quick comparison of Tables E and F.

S_B Steam per brake horse-power-hour.

S_K Steam per kilowatt-hour.

In Table E these last two are given in the same column, as either one or the other was determined; and the letters B and K are placed after the numbers to show which quantity is meant.

(*f*) Range of Test Data.—Glancing over the "general information" part of the tables we see that both chronologically and geographically the field of steam-engineering has been pretty well covered. There is little data from French sources, but this lack is the less important because of the quite general use of the Corliss engine in France, so that there would only be a paralleling of English and American results. In selecting from the great mass of material available, the object has been to choose representative tests; in most cases performance at or near rated power is given, the manner of variation of efficiency with load being left for illustration by curves from several typical series of tests, in Figs. 687 to 698.

A few salient points in regard to the source and character of information as to engines of different classes are as follows:

Tests of simple engines are mostly rather ancient history, later attention being chiefly paid to the more complex and economical forms. For the small high-speed engine very little good data is available, considering the large numbers of these engines in use.

By far the best lot of work on the locomotive is that covered by the report of the tests made on the Pennsylvania Railroad Testing Plant at the St. Louis Exposition of 1904. These results are, however, a little better than those generally got in road tests.

[To page 629]

Digitized by Google

TABLE 75 A. TESTS OF

No.	DIAMETER × STROKE			CLEARANCE	TYPE	SERVICE
					SIMPLE MARINE ENGINES	
101	36	×	96	.058	Duplex, } inclined,	{ Paddlewheel
102	58	×	105	.085	Single, } lift-valve	{ "
103	26	×	36	.054		"
104	25	×	24	.041		Screw
					CORLISS ENGINES	
111	8	×	24	.08	Horizontal	Experimental
112	9	×	36	.076	Horizontal	Experimental
113	23	×	60			
114	20	×	48		Horizontal	Textile mills
115	28	×	48			
116	30	×	72			
117	32	×	48	.035	Horizontal	Textile mill
118	25	×	48	.03	Duplex horizontal	Textile mill
119	24	×	48	.025	Horizontal	Textile mill
					LIFT-VALVE ENGINES	
131	27.5	×	59.1	.03	Duplex horizontal	Textile mill
132	21.3	×	45.2	.025	Horizontal	Textile mill
133	22.6	×	45.3	.024	Duplex horizontal	Textile mill
134	16.3	×	39.4	.048	Horizontal	Shop power
					DOUBLE-VALVE ENGINES	
141	17	×	30	.071	Horizontal (duplex)	Air-compressor
142	17	×	24	.023	Duplex hor. Buckeye	Power
					HIGH-SPEED ENGINES	
151	7½	×	10		Hor. semi-portable	Farm power
152	8½	×	15	.118	Hor. semi-portable	Farm power
153	10	×	20		Hor. Porter-Allen	Experimental
154	10	×	11		Hor. Ball & Wood	Experimental
155	12	×	14	.088	Hor. McEwen	Generator
156	14	×	20		Hor. slide-valve	Power
					HIGH-SUPERHEAT ENGINES	
171	9.8	×	6.3		Vert. piston-valve	Power
172	7.1	×	11.8		Horizontal	Power
					SIMPLE LOCOMOTIVE	
181	22	×	28	.113	Consolidation	Penna. R.R.

Digitized by Google

SIMPLE ENGINES. TABLE 75 A.

LOCATION	YEAR	REPORTED BY	REFERENCE	No.
S.S. *Michigan*	1861	B. F. Isherwood, "Researches in Steam Engineering"	Vol. I. 96	101
S.S. *Eutaw*	1863		Vol. II. 144	102
S.S. *Dexter*	1874	C. E. Emery	ENG. 1875, I. 129	103
S.S. *Bache*	1874		ENG. 1875, I. 2	104
Mass. Inst. Tech.	1885	C. H. Peabody	A. S. M. E., 7–328	111
Sibley College	1894	R. C. Carpenter	A. S. M. E., 16–913	112
New England cotton mills	1880 and earlier	G. H. Barrus	A. S. M. E., 11–175	113, 114, 115, 116
	1879	N. McDougall	ENG. 1881, II. 35	117
Paisley	1889	M. Longridge	ENG. 1892, II. 557	118
Mulhouse	1878	Soc. Ind. de Mulhouse	*q* ENG. 1881, I. 347	119
Augsburg	1872	C. Lindé	ENG. 1873, I. 74	131
Augsburg	1872	C. Lindé	*q* Z. V. D. I. 1905, 1310	132
Augsburg	1876	Prof. Thoma	*q* Z. V. D. I. 1905, 1310	133
Augsburg	1904	J. Krumper	Z. V. D. I. 1905, 1310	134
	1889	J. E. Denton—	A. S. M. E., 10–722	141
	1884	J. C. Hoadly—	*q* E. R., Apr. 7, '94–303	142
Newcastle	1887	Roy. Agric. Soc.	ENG. 1887, II. 518	151, 152
Mass. Inst. Tech.	1885	C. H. Peabody	A. S. M. E., 7–328	153
Stevens Inst. Tech.	1894	D. S. Jacobus	A. S. M. E., 15–915	154
	1893	R. C. Carpenter	A. S. M. E., 14–426	155
Jonesville, Mich.	1890	R. C. Carpenter	A. S. M. E., 11–723	156
Zweibrücken	1896	Prof. Gutermuth	Z. V. D. I. 1896, 1391	171
Trier	1894	Prof. Gutermuth	Z. V. D. I. 1896, 1423	172
St. Louis	1904	P. R.R. Report of Tests	p. 564, 580	181

Digitized by Google

TABLE 75 A. TESTS OF

No.	CONDITION	N	V	p_{1A}	p_{2A}	e	r	p_m	H	S_E	J	
101	TC1NF	13.7	219	35.8	2.12	.30	3.0	19.9	134	35.2	—	
102.1	TC1NF	9.2	161	38.7	0.84	.58	1.6	32.5	415	31.39	—	
2	P	9.1	159	41.9	1.45	.50	1.9	31.5	397	26.15	—	
103.1	TC1NF	61.1	367	81.9	2.3	.25	3.5	37.5	219	23.91	—	
2		50.9	305	55.5	2.0	.26	3.3	25.6	124	28.80	—	
104.1	TC1NF	47.1	188	92.7	2.74	.16	5.3	32.3	89	26.25	—	
2	J	53.8	215	94.1	2.12	.16	5.1	36.9	116	23.15	05	
111	TA1NC	61.3	245	86.6	14.7	.37	2.4	45.8	18	36.3	—	
112.1	TC1NF	85.4	512	115.7	2.7	.20	4.3	54.7	52	23.5	—	
2	J	85.4	512	113.1	2.2	.17	4.8	57.7	50	22.9	.055	
113	TA1NF	74.7	747	87.0	17.5	.37	2.6	33.1	309	27.8	—	
114	TC1NF	61.7	502	99.4	2.6	.18	5.0	41.8	195	19.24	—	
115	PA1NF	100.0	800	83.5	17.5	.33	2.9	28.6	423	25.53	—	
116	PC1NF	50.1	601	84.2	2.7	.18	5.0	29.2	373	18.48	—	
117	TC1JF	82.8	662	85	1.4	.21	4.3	33.8	540	20.7	05	
118.1	TC1NF	65.0	520	76	2.0	.22	4.2	33.2	508	19.77	—	
2	J	65.1	521	76	2.0	.22	4.2	31.9	488	19.27	05	
119.1	TC1NF	49.2	394	80.6	2.1			24.2	127	24.73	—	
2	J	50.2	402	91.8	2.1			29.9	161	19.31	04	
131	TC1JF	49.3	371	95.9	1.18	.10	8.4	26.5	105	19.35		
132	TC1JF	39.6	389	89.8	2.6	.10	7.7	28.7	395	19.29	.04	
133	TC1JF	47.7	360	93.5	1.37	.12	7.4	30.2	262	18.11		
134.1	TC1JF	81.5	535	159.9	1.18	.05	10.3	37.7	127	17.21		
2	P	81.3	533	159.5	0.71	.06	9.5	37.0	121	16.68		
141.1	TA1NC	59.9	300	105.7	14.4	.23	3.6	45.8	91	27.41	—	
2		9.3	47	107.2	14.4	.15	4.8	40.1	12	38.22	—	
3		65.7	324	43.3	14.4	.22	3.7	9.8	21	52.11	—	
142	PA1NF	152.9	612	90.6	14.7	.34	2.8	36.8	311	25.64	—	
151	TA1JF	172.3	287	135	14.7	.08	6.0	37.0	14	25.4	09	
152	TA1JF	136.3	340	140	14.7	.13	4.5	40.7	23	20.4	1.	
153	TA1NC	198.7	660	88.5	14.7	.27	3.1	21.8	34	43.4	—	
154	TA1NC	253.9	465	85.7	14.7			25.6	28	37.7	—	
155	TA1NC	245	571	92.1	14.7	.32	2.7	38.8	76	31.1	—	
156	TA1NF	171.5	572	85.0	14.7	.30	3.0	17.2	46	30.3	—	
171.1	PA1NF	250	262	119.9	14.7			27.7	17	19.4	—	
2	T	250	262	117.1	14.7			24.5	15	39.6	—	
172	PA1NF	200	396	142.8	14.7			48.7	23	14.81	—	
181.1	TA1NF	40.4	187	217.9	15.0	.31	2.7	106.4	455	27.49	—	
2		79.7	372	215.2	15.3	.29	2.8	92.4	779	24.13	—	
3		120.4	561	210.4	16.3	.33	2.5	80.2	1006	23.79	—	
4		159.1	742	195.8	17.4	.30	2.7	58.9	990	24.23	—	
5		160.8	750	186.6	16.7	.45	2.0	47.3	803	29.33	—	

For meaning of symbols, see pages 602 to 606.

Digitized by Google

MPLE ENGINES. TABLE 75 A.

t_s	t_2	q_H	h	Q	W	w	W_R	E_A	E_R	Q_M	No.
15	128		−13.9	1051	72.4	−2.5	180.8	.069	.401	617	101
15	93		−13.9	1045	81.1	−3.2	194.5	.078	.417	548	102.1
5°	115		+51.5	1133	97.5	+20.8	235.6	.086	.413	493	2
15	132		−13.4	1065	106.4	−3.2	235.8	.100	.452	425	103.1
15	126		−13.7	1061	88.5	−2.9	213.0	.083	.416	510	2
15	138		−13.3	1061	97.0	−3.1	229.8	.091	.422	465	104.1
15	123	−5.5	−13.3	1055	110.0	−3.3	242.3	.103	.453	411	2
17	212		−15.1	983	70.2	−2.1	124.4	.071	.565	595	111
07	138		− 6.1	1073	108.3	−1.5	247.1	.101	.457	420	112.1
08	130	−11.6	− 7.0	1068	111.1	−1.9	249.8	.104	.445	407	2
1	221		− 8.9	980	91.6	−1.1	116.2	.094	.789	454	113
1	136		− 8.8	1069	132.2	−2.1	238.3	.124	.554	342	114
0°	221		+17.7	1006	99.7	+3.1	117.4	.100	.849	428	115
0°	138		+11.8	1084	137.8	+3.9	231.2	.127	.623	334	116
2	114	−13.3	−17.8	1066	123.0	−4.7	257.7	.115	.477	368	117
15	126		−13.5	1068	128.7	−3.2	233.3	.121	.552	352	118.1
15	126	− 6.1	−13.5	1062	132.1	−3.2	233.3	.124	.567	341	2
0	128		0	1081	102.9	0	237.9	.095	.433	447	119.1
0	128	− 9.0	0	1075	131.8	0	246.3	.123	.535	346	2
1	108	*−12.5*	− 8.9	1084	131.5	−2.4	276.5	.121	.476	350	131
1	103	−14.1	− 8.9	1086	131.9	−2.5	231.2	.121	.571	349	132
1	113	*−12.5*	− 8.9	1078	140.5	−2.4	267.4	.130	.526	325	133
1	108	*−18*	− 8.6	1090	147.8	−2.7	309.6	.136	.477	313	134.1
7°	91	*−18*	+140.	1256	152.6	+57.0	393.1	.122	.388	348	2
08	211		− 7.0	996	92.9	−1.1	143.2	.093	.647	456	141.1
08	211		− 7.0	996	66.3	−1.1	142.2	.067	.466	637	2
08	211		− 7.4	978	48.8	−0.6	71.2	.050	.685	848	3
1°	212		+24.3	1023	99.2	+3.7	135.5	.097	.732	438	142
	212	−12.7	− 8.7	986	100.2	−1.5	159.3	.102	.629	418	151
	212	−16.1	− 8.6	984	124.8	−1.5	162.0	.127	.771	334	152
	212		− 8.9	989	58.7	−1.2	128.8	.059	.457	715	153
08	212		− 7.1	991	67.6	−1.0	126.7	.068	.534	622	154
05	212		− 4.4	995	81.8	−0.6	132.3	.082	.619	516	155
	212		− 8.9	989	84.0	−1.2	125.8	.085	.668	499	156
0°	212		+132.5	1138	131.1	+35.7	187.8	.115	.699	368	171.1
	212		0	1010	64.3	0	150.4	.064	.427	663	2
0°	212		+188.5	1198	171.8	+57.5	222.4	.143	.772	296	172
10	213		− 8.1	1011	92.6	−1.7	192.7	.092	.482	463	181.1
11	214		− 9.6	1008	105.5	−2.0	190.3	.105	.555	405	2
12	217		− 9.7	1004	107.0	−1.9	184.8	.107	.580	398	3
11	221		− 9.0	999	105.0	−1.7	175.6	.105	.598	403	4
09	219		− 7.9	1001	86.7	−1.5	174.9	.087	.497	490	5

Italic figures mean assumed values.

Digitized by Google

TABLE 75 B. COMPOUND ENGINES.

No.	DIAMETER	× STROKE	RATIO	CLEARANCE	TYPE
	COMPOUND LOCOMOTIVES				
201	23, 35	× 32	2.33	.167–.057	2-cyl. "Consolidation"
202	14.2, 23.7	× 25.2	2.81	.133–.098	4-cyl. "Atlantic"
203	15, 25	× 26	2.81	.186–.066	4-cyl. "Atlantic"
204	14.2, 22.1	× 23.2	2.46	.117–.104	4-cyl. "Atlantic"
	HIGH-SPEED ENGINES				
211	6, 9	× 12	2.28	.241–.155	Semi-portable, horiz.
212	4½, 9½	× 10	4.04	*.18 –.12*	Semi-portable, horiz.
213	5½, 9	× 15	2.48	.160–.108	Semi-portable, horiz.
214	12, 20	× 13	2.81	.11 –.08	Vert. 2-crank
215	17, 27	× 24	2.55		Vert. 2-crank
216	9, 16	× 14	3.08	.12 –.09	Horiz. tandem
217	12.8, 19.7	× 14.1	2.38	.08 –.05	Vert. 2-crank
	SCHMIDT "MOTORS" (See Fig. 612)				
221	12.2, 27.3	× 19.8	3.92		Vert. tandem
222	14.9, 31.5	× 31.5	3.46		Vert. tandem
	ENGLISH HIGH-SPEED ENGINES				
224	Willans Compound, No. 3748		Dimensions not given		Vert. tandem, duplex or triplex
225	Willans Compound, No. 3571				
226	Willans Compound, 800 H.P.				
227	Willans Triple, No. 3416				
228	Belliss Triple				Vert. double-acting
	LOW-SPEED SLIDE-VALVE ENGINES				
232	15, 35.8	× 50	4.75	.065–.094	Horiz. direct-exp.
233	20, 34	× 60	2.92	.083–.068	Horiz. 2-crank
	ENGINES WITH POSITIVELY DRIVEN CORLISS VALVES				
234	14, 28	× 18	3.77		Horiz. tandem
235	19.7, 29.5	× 19.7	2.27	.051–.048	Vert. 2-crank
236	15, 40½	× 27	7.33	.040–.047	Horiz. tandem
	ENGINES WITH DOUBLE SLIDE-VALVES				
241	14, 28	× 24	4.04	.036–.064	Hor. 2-crank Buckeye
242	24, 48	× 48	4.13	.025–.020	Vertical, 2-crank McIntosh & Seymour
243	28, 58	× 48	4.30	.055–.036	
244	31, 64	× 48	4.32	.061–.081	

Digitized by Google

IIGH-SPEED TYPES. TABLE 75 B.

SERVICE	LOCATION	YEAR	REPORTED BY	REFERENCE	No.
lich. Cent., Schenectady '. R.R., French built ., T. & S. F., Baldwin lanover Mach. Works			Tested at Penn.a. R.R. Testing Plant, St. Louis Exposition, 1904: from Report of Tests, P. R.R.	Pp. 285, 301 Pp. 413, 429 Pp. 484, 500 Pp. 564, 580	201 202 203 204
Tests made at Royal Agric. Soc. Show, Newcastle		1887	Committee on Tests	ENG. 1887, II. 518	211 212 213
enerator	Boston	1898	G. H. Barrus	E. R., Aug. 6, '98–206	214
enerator	St. Louis	1904	J. R. Bibbins	E. R., Jan. 28, '05–92	215
enerator	Ridgeway, Pa.	1892	R. C. Carpenter	A. S. M. E., 14 – 426	216
hop Power	Augsburg	1898	J. Krumper	Z. V. D. I. 1905, 1318	217
	Cassel	1894	M. Schroeter	Z. V. D. I. 1895, 5	221
actory	Schattau	1899	R. Doerfel	Z. V. D. I. 1899, 1562	222
enerator enerator ill		1904		ENG'R, 1905, II. 79	224 225 226
enerator	Blackburn	1904	A. S. Giles	ENG'R, 1904, II. 234	227
		1904	Makers	ENG'R, 1905, II. 78	228
ill Power	Mulhouse	1876	Soc. Ind. de Mulh.	*q* ENG. 1878, I. 4, 21	232
extile mill	Blackburn	1881	M. Longridge	ENG. 1882, I. 174	233
enerator	Philadelphia	1901	Davis & Griggs	E. R., Mar. 9, '01–220	234
hop Power	Augsburg	1893	J. Krumper	Z. V. D. I. 1905, 1318	235
	Harrisburg, Pa.	1903	B. T. Allen	A. S. M. E., 25 – 212	236
enerators	Chicago	1893	G. H. Barrus	E. R. Feb. 17, '94–192	241
extile Mill	Lawrence, Mass.	1897	F. W. Dean	A. S. M. E., 19 – 310	242
enerators	Boston	1901	L. S. Marks	A. S. M. E., 25 – 443	243
enerators	Boston	1903			244

Digitized by Google

TABLE 75 B. COMPOUND ENGINE

No.	CONDITION	N	V	p_{1A}	p_{2A}	e	r	p_m	H	S_E	f
201.1	TA2NF	40.0	213	223.9	15.0	.46	4.0	77.3	477	20.43	—
2		80.0	427	223.2	17.2	.55	3.4	79.8	987	20 10	—
3		160.0	854	223.8	18.8	.50	3.7	38.1	941	23.27	—
202.1	TA2NF	160.0	673	229.3	15.9	.38	6.0	45.5	809	19.86	—
2		240.0	1010	230.2	16.0	.29	7.4	23.5	625	22.59	—
203.1	TA2NF	160.0	693	236.5	16.4	.51	4.3	63.5	1296	19.67	—
2		240.0	1040	232.4	19.0	.50	4.4	50.0	1529	20.81	—
204.1	TA2NF	80.0	315	216.4	15.1	.45	4.8	66.7	481	17.82	—
2		160.0	629	213.5	15.8	.44	4.9	51.7	742	17.36	—
3		239.8	942	207.8	16.6	.42	5.1	34.5	744	17.91	—
211	TA2NF	172.9	317	140	14.7	.43	3.9	35.4	21	28.00	—
212	TA2JF	159.9	266	265	14.7	.07	18.5	33.6	19	19.20	[illegible]
213	TA2JF	149.0	372	170	14.7	.16	8.6	34.3	24	20.66	[illegible]
214	TA2NF	271.2	587	181.4	15.3	.37	5.5	33.7	188	21.14	—
215	TA2NF	200	800	165	14.7			40.2	554	20.01	—
216.1	TA2NF	265	619	126.3	14.0			30.6	114	23.81	—
2	J	264.3	618	129.5	14.0			29.0	108	23 14	[illegible]
3	TC2NF	265	619	124.0	2.6			29.3	109	19.95	—
4	J	264	617	128.0	2.8			28.8	107	19 60	[illegible]
217.1	TA2JF	181.1	427	133.2	14.1	.31	6.4	32.2	126	21.85	
2	C	180.6	426	133.6	1.05	.13	11.9	30.2	118	16.10	
221	PC2NF	116.8	395	183.0	1.1	.34	11.0	27.3	73	10.40	—
222	PC2NF	96.2	504	151.6	1.3	.45	7.5	36.5	168	9.95	—
224	PA2NF	302		169	14.7			46.2	600	15.85	—
225.1	TC2NF			167	2.4			49.9	360	16.9	—
2	P			173	2.0			50.3	360	13.4	—
226	PC2NF	273		168	2.4				800	11.23	—
227	PC3NF			194.3	3.9			34.4	1288	11.05	—
228	PC3NF	472		175	1.6				316	10.8	—
232	TC2JF	39.7	331	72.5	1.0	.83	5.8	21.2	178	19.87	[illegible]
233.1	TC2NF	47.6	476	103.8	1.5	.29	8.4	24.1	314	16.92	—
2	JH	47.6	476	104.5	1.5	.26	9.1	24.7	326	17.08	[illegible]
234	TA2NF	200	600	152 3	14.7			28.2	314	23.5	—
235	TC2JHF	149.5	489	114.1	1.26	.19	10.0	25.7	270	15.50	
236.1	TC2JC	155.2	698	104.4	2.7			3.2	87	14.42	[illegible]
2		150.1	675	166.7	2.0			18.4	502	12.66	[illegible]
241.1	TA2NC	165.7	663	132.5	14.7	.49	8.2	21.6	267	23.24	—
2	C	163.3	653	133.5	2.0	.33	11.9	23.5	286	16.07	—
242	PC2J$_1$HF	99.6	797	137.6	1.3			24.9	1076	12.87	[illegible]
243.1	PC2JHM	101.9	815	164.2	1.1	.23	17.6	16.2	1047	13.59	[illegible]
2	N	101.9	815	173.6	1.0	.20	19.2	17.0	1105	14.41	—
244	PC2JHF	116.9	935	153.2	2.2	.27	16.6	24.0	2184	12.50	[illegible]

For meaning of symbols see pages 602 to 606.

Digitized by Google

IGH-SPEED TYPES. TABLE 75 B.

n. t_s	t_2	q_H	h	Q	W	w	W_R	E_A	E_R	Q_M	No.
)166	213		−13.9	1005	124.5	−2.9	193.5	.124	.644	342	201.1
)161	222		−13.5	997	126.6	−2.7	185.1	.127	.683	334	2
)164	223		−13.7	996	109.4	−2.7	179.6	.110	.610	386	3
)185	216		−15.4	1002	128.1	−3.2	191.3	.128	.670	332	202.1
)173	216		−14.4	1002	112.7	−3.0	191.4	.112	.589	382	2
)182	217		−15.1	1001	129.4	−3.2	191.8	.129	.675	328	203.1
)253	225		−21.1	997	122.3	−4.2	180.3	.124	.678	343	2
7°	213		+57.8	1076	142.8	+14.3	202.9	.133	.703	320	204.1
0°	216		+65.0	1080	146.6	+15.7	205.4	.136	.713	313	2
.2°	218		+59.4	1072	142.1	+13.6	198.2	.133	.717	320	3
1	212		− 8.7	1000	91.0	−1.5	162.0	.091	.561	466	211
1	212	−23.5	− 8.2	993	132.6	−1.9	208.2	.134	.636	317	212
1	212	−17.6	− 8.5	988	123.2	−1.6	175.8	.125	.701	340	213
15	215		−12.7	1000	120.4	−2.4	177.4	.120	.680	352	214
13	212		−11.1	1002	127.2	−2.1	175.4	.127	.725	334	215
1	210		− 8.7	1000	106.8	−1.5	157.5	.107	.678	398	216.1
1	210	−4.9	− 8.7	1001	110.0	−1.5	159.4	.110	.690	386	2
1	135		− 8.7	1075	127.6	−2.2	254.1	.119	.502	358	3
1	139	−11.4	− 8.7	1072	129.9	−2.2	251.2	.121	.518	351	4
1	210	*−12*	− 8.7	989	116.5	−1.5	159.9	.118	.729	360	217.1
1	104	*−18*	− 8.7	1090	158.0	−2.6	303.6	.145	.520	293	2
3°	108		+153	1273	244.6	+62.2	386.7	.192	.633	221	221
5°	111		+161	1273	255.8	+64.7	368.8	.200	.693	212	222
7°	212		+67.4	1081	160.5	+16.0	193.0	.148	.831	286	224
	133		0	1093	150.6	0	279.4	.138	.539	308	225.1
0°	126		+93.0	1193	190.0	+32.8	323.9	.159	.588	267	2
7°	133		+61.3	1154	226.6	+19.7	299.5	.196	.756	216	226
2°	152		+72.3	1149	230.3	+22.4	286.5	.201	.804	212	227
5°	118		+187.3	1296	235.6	+77.9	381.0	.182	.618	233	228
1	102	−13.7	−9.0	1050	128.1	−2.4	265.6	.122	.483	348	232
1	116		−8.8	1090	150.3	−2.4	269.7	.138	.558	307	233.1
1	116	−15.0	−8.8	1075	149.1	−2.4	270.2	.139	.552	306	2
17	212		−14.6	996	108.3	−2.6	166.9	.109	.650	390	234
1	110	*−18*	−8.8	1080	164.2	−2.4	283.8	.152	.579	278	235
0	138	−17.1	0	1060	176.5	0	241.7	.167	.731	255	236.1
0	126	−10.6	0	1088	201.2	0	288.6	.185	.696	230	2
05	212		−4.3	1003	109.5	−0.7	158.7	.109	.690	389	241.1
05	126		−4.3	1090	158.5	−1.2	272.7	.145	.583	292	2
0°	111	−24.0	+12.6	1122	197.8	+3.7	311.4	.176	.635	241	242
.2°	105	−19.8	+6.0	1106	187.3	+2.1	319.5	.169	.587	251	243.1
.6°	102		+9.5	1134	176.7	+2.8	328.2	.156	.539	272	2
2°	130	−11.5	+40.5	1123	203.6	+12.1	290.3	.181	.701	234	244

Italic figures mean assumed values.

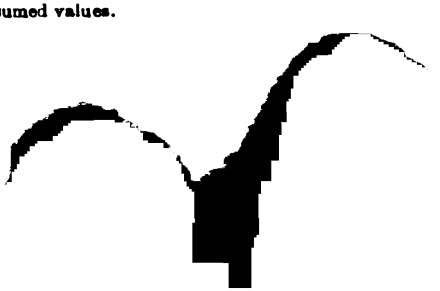

Digitized by Google

TABLE 75 C. MULTIPLE-EXPANSION ENGINES.

No.	DIAMETERS	× STROKE	RATIO	CLEARANCES	TYPE
	CORLISS ENGINES				
251	9, 16	× 36	3.24	.076–.089	Horiz. 2-crank
252	12, 22	× 42	3.38		Hor. 2-ck. Greene
253	26, 48	× 60	3.41	*.025–.025*	Horiz. 2-crank
254	30, 60	× 72	4.08	.026–.036	Horiz. 2-crank
255	17, 34	× 60	4.18	.035–.027	Vert. beam
256	25, 50	× 36	4.08		Vert. 2-crank
257	20, 40	× 42	4.03	.047–.070	Horiz. 2-crank
258	25, 52	× 60	4.50	.046–.054	Vert. 2-crank
259	42, 86	× 60	4.30	.098–.048	Horiz.-vert. dup.
	HIGH-RATIO COMPOUND ENGINES				
271	44, 75.6–75.6	× 60	6.15	.104–.042	Vert. 3-crank
272	18, 44.3	× 72	6.40	.023–.018	Hor. 2-c. Wheelock
273	18, 48½	× 48	7.30	.020–.029	Hor. 2-c. Wheelock
274	16, 40	× 48	6.35	*.025–.020*	Horiz. 2-crank
	LIFT-VALVE ENGINES				
281	14.6, 24.1	× 37.5	2.75	.043–.031	Horiz. 2-crank
282	26.6, 41.5	× 53.2	2.45	.040–.035	Horiz. 2-crank
283	17.2, 26	× 43.2	2.39	.044–.035	Horiz. tandem
284	28.6, 43.4	× 51.2	2.31	.050–.045	Horiz. tandem
285	26.6, 43.3	× 45.3			Horiz. tandem
	HIGH-SUPERHEAT ENGINES				
291	16, 28	× 42	3.13	.041–.058	Hor. lift & Corliss
292	21, 36	× 36	2.98	.087–.094	Vert. 2-ck. piston
	TRIPLE-EXPANSION POWER ENGINES				
301	9, 16, 24	× 36	7.34	.076–.094	Hor. 3-ck. } Corliss
302	11.5, 19, 30	× 36	6.90	.056–.043	Vert. 2-ck. } Corliss
303	19, 29, 46	× 48	6.00		Vert. 3-ck. } Corliss
304	17.5, 28.5, 48	× 36	7.60		Vert. 3-ck. } Corliss
311	11.1, 17.7, 27.6	× 39.4	6.63	.103–.038	Hor. 2-ck. } Lift-valve
312	21.7, 33.5, 51.2	× 61.1	5.85	.051–.033	Horizontal } Lift-valve
313	17.8, 27.6, 41.4	× 53.2	5.71	.045–.035	Horizontal } Lift-valve
314	15.4, 25.2, 37.4	× 25.6	6.05	.100–.053	Vert. 3-ck. } Lift-valve
315	23.6, 37.4, 53.1	× 35.4	5.10		Vert. 3-ck. } Lift-valve
316	34.0, 49.1, 61.0–61.0	× 51.2	6.40		Vert. 2-ck. } Lift-valve

Digitized by Google

CORLISS TYPE. TABLE 75 C.

SERVICE	LOCATION	YEAR	REPORTED BY	REFERENCE	No.
Experi'tal	Sibley College	1894	R. C. Carpenter	A. S. M. E., 16–913	251
Generator	(Load fluctuates)	1896	J. Christie	A. S. M. E., 19–320	252
Text. mill	Fall River, Mass.	1888	G. H. Barrus	A. S. M. E., 9–545	253
Text. mill	N. Bedford, "	1893	J. E. Denton—	A. S. M. E., 15–882	254
Flour mill		1895	M. Longridge	ENG. 1896, I. 132	255
Text. mill	Lawrence, Mass	1898	Dean & Main	ENG. 1898, II. 533	256
Generator	Brooklyn, N. Y.	1902	D. S. Jacobus	A. S. M. E., 24–1274	257
Text. mill	Bessbrook, Ire.	1904	E. G. Hiller	q ENG. '04, II. 165	258
Generator	New York	1906	H. G. Stott		259
Generator	New York	1904	J. D. Andrews—	q E.R., May 28, '04–690	271
Text. mill }	Grosvenordale,	1894	G. H. Barrus	E.R., Nov. 3, '94–379	272
Text. mill }	Conn.	1897	G. H. Barrus	E.R., N. 20, '97–540	273
Text. mill	Providence, R.I.	1902	G. H. Barrus—	E.R., Nov. 8, '02–436	274
Text. mill	Augsburg	1880	M. Schroeter	q Z. V. D. I. '05, 1314	281
Text. mill	Augsburg	1893	Bav. Br. Insp. Co.	q Z. V. D. I. '05, 1316	282
Generator	Wiesbaden	1899	J. Krumper	Z. V. D. I. '05, 1312	283
Generator	Wiesbaden	1900	Bav. Br. Insp. Co.	q Z. V. D. I. '05, 1312	284
Generator	Antwerp	1905		ENG. 1905, II. 179	285
Mill power	Philadelphia	1903	D. S. Jacobus	A. S. M. E., 25–264	291
Mill power	Belfast	1903	M. Longridge—	ENG'R, 1905, I. 546	292
Experi'tal	Sibley College	1894	R. C. Carpenter	A. S. M. E., 16–913	301
Generator	Kimberly, S.A.	1893	A. M. Robeson	ENG. 1896, I. 129	302
Text. mill	Belfast	1894		ENG. 1894, II. 230	303
Generator	Newcastle-on-T.	1901	W.B. Woodhouse	q ENG. 1902, II. 142	304
Hop power	Augsburg	1889	M. Schroeter	Z. V. D. I. 1890, 7	311
Text. mill	Augsburg	1893	Bav. Br. Insp. Co.	q Z. V. D. I. '05, 1346	312
Text. mill	Immenstadt	1897	Bav. Br. Insp. Co.	q Z. V. D. I. '05, 1350	313
Hop power	Augsburg	1902	J. Krumper	Z. V. D. I. '05, 1352	314
Factory	Prague	1898	R. Doerfel	Z. V. D. I. '99, 1560	315
Generator	Berlin	1900		Z. V. D. I. 1900, 606	316

Digitized by Google

TABLE 75 C. MULTIPLE-EXPANSION ENGINES.

No.		Condition	N	V	p_{1A}	p_{2A}	e	r	p_m	H	δ_H	f
251	1	TC2NC	85.1	511	112.5	3.8	.21	12.2	21.5	67	16.52	—
	2	JH	85.5	513	128.9	3.2	.15	15.5	21.8	68	18.03	.15
252	1	TC2HF	113.	791	123.3	2.4			21.2	189	20.45	.06
	2	N	115.	805	126.8	2.4			19.9	181	19.34	—
253		TC2NC	52.3	523	109.0	1.3	.51	6.6	21.4	607	16.26	—
254		PC2NM	65.2	783	137.7	2.1	.32	10.3	25.6	1592	13.50	—
255		TC2JHC	34.0	340	148.5	0.5	.17	19.9	23.3	216	12.97	.11
256		TC2JHF	163.5	981	140.2	1.3			20.2	1170	13.04	.15
257		TC2JHF	120.9	844	162.8	1.0	.25	15.0	26.7	853	12.33	.09
258	1	PC2HF	65.2	652	170.0	1.45	.22	18.0	23.7	978	11.17	.05
	2	N	65.1	651	170.3	1.5	.22	18.0	23.8	980	11.59	—
259		PC2NF	74.5	745	190.0	0.9	.32	14.4	27.8	7227	11.90	—
271	1	TC2NF	76.3	763	198.6	1.6	.25	18.	25.6	5332	12.10	—
	2	JH	76.3	763	199.4	2.7	.25	18.	26.4	5449	12.68	.07
272		TC2JHF	60.5	726	165.7	2.2	.26	22.8	20.5	692	12.67	.07
273		PC2JHF	80.1	641	165.3	1.6	.29	24.6	18.7	662	12.04	.09
274	1	PC2NF	80.1	641	186.6	0.9	.29	20.6	23.3	567	11.29	—
	2	JH	80.1	641	184.4	1.2	.24	24.5	23.3	566	11.49	.13
281		TC2JHF	71.3	445	95.3	1.17	.19	12.3	21.6	130	12.62	
282	1	PC2JHF	66.0	585	107.5	1.20	.23	9.4	24.5	578	12.42	
	2	T	66.2	587	107.3	1.02	.20	10.8	24.0	567	15.11	
283		TC2JHF	90.0	648	133.4	1.58	.12	15.4	21.9	884	14.77	
284		PC2JHF	90.3	770	133.8	2.86	.20	9.7	27.4	956	11.85	
285		PC2JHF	91.6	691	157.3	1.5			33.6	1040	10.18	
291	1	PC2HF	102.3	716	157.0	1.5	.32	9.3	31.8	420	9.56	
	2	T	102.2	715	159.8	2.3	.27	10.7	30.8	407	13.84	
292	1	PC2HC	100.7	604	132.1	1.0	.26	9.4	26.1	481	9.10	
	2		100.7	604	131.7	1.0	.15	13.7	18.8	348	8.89	
301	1	TC3NC	83.6	501	130.4	3.0	.39	17.3	16.6	114	15.29	—
	2	$J_{1,2}H$	84.7	508	129.6	2.5	.30	20.4	17.2	120	13.92	.20
302		TC3JC	74.6	448	136.6	1.36			26.5	234	13.21	.11
303		TC3NF	76.0	608	178.	1.0	.30	22.	25.8	785	11.75	—
304	1	PC3JF	100.3	602	214.	2.0			35.6	1177	10.42	.03
	2	N	102.4	614	207.	2.1			29.7	1030	10.40	—
311		TC3JHF	70.3	471	160.5	0.84	.28	18.2	24.9	205	12.61	.17
312		TC3JHF	58.6	596	163.	.93	.23	21.5	21.9	802	12.46	
313		TC3JHF	66.7	592	170.	.88	.22	22.5	22.3	554	11.98	
314	1	TC3JHF	144.6	618	182.9	1.27	.25	18.3	26.3	538	12.36	
	2	P	144.2	617	180.8	1.24	.29	16.2	26.8	549	9.99	
315		PC3JHF	85.6	505	157.6	1.0			21.1	715	10.90	
316	1	TC3JHF	82.7	703	217.5	1.1			25.2	2976	11.75	
	2	P	82.7	703	212.7	1.1			24.1	2850	9.62	

For meaning of symbols see pages 602 to 606.

Digitized by Google

CORLISS TYPE. TABLE 75 C.

m, t_S	t_2	q_H	h	Q	W	w	W_R	E_A	E_R	Q_M	No.
.012	151		−10.5	1055	154.0	−2.5	225.6	.146	.683	290	251.1
.009	144	−32.1	−7.8	1035	141.2	−1.9	224.9	.137	.578	311	2
.02	133	−13.2	−17.4	1055	124.4	−4.6	254.5	.118	.489	360	252.1
.02	133		−17.4	1069	131.5	−4.6	255.4	.123	.515	344	2
.01	111		−8.8	1096	156.4	−2.5	280.0	.143	.559	307	253
14.5°	128		+9.2	1102	188.6	+2.4	275.9	.171	.685	248	254
0	80	−32.0	0	1111	196.3	0	347.5	.177	.565	240	255
.007	111	−31.0	−6.1	1074	195.3	−1.8	296.2	.182	.659	233	256
.007	102	−26.4	−6.0	1091	206.4	−1.9	319.2	.189	.647	224	257
90.5°	115	−13.7	+57.3	1156	227.8	+19.6	325.7	.197	.700	215	258.1
72.7°	116		+46.3	1157	219.5	+15.1	319.7	.190	.687	223	2
9.4°	99		0	1137	214.0	+1.9	328.1	.188	.651	225	259
.007	118		−5.9	1106	210.3	−1.9	306.2	.190	.688	223	271.1
.007	138	−17.5	−5.9	1069	200.7	−1.7	279.1	.188	.720	220	2
.006	130	−18.6	−5.1	1072	201.0	−1.5	282.0	.188	.714	226	272
14.7°	118	−28.6	+9.5	1088	211.4	+3.0	295.4	.195	.716	218	273
41°	99		+26.6	1157	225.5	+9.5	344.6	.195	.654	218	274.1
41°	108	−36.5	+26.6	1110	221.5	+9.3	330.3	.200	.671	213	2
.01	107	*−25*	−8.9	1072	201.7	−2.5	276.5	.178	.730	238	281
129.3°	108	*−20*	+76.4	1164	204.9	+25.4	301.0	.176	.681	241	282.1
.01	103	*−20*	−8.8	1084	168.4	−2.6	290.8	.155	.579	273	2
.01	118	*−22*	−8.7	1072	172.3	−2.5	283.4	.161	.608	264	283
106.6°	140	*−15*	+65.2	1130	214.8	+19.3	274.5	.190	.782	223	284
199°	116	*−20*	+120.0	1208	250.0	+44.5	343.9	.207	.727	205	285
375°	116	0	+215.5	1324	266.2	+86.7	386.0	.201	.690	212	291.1
.01	132	*−10*	−8.6	1074	183.7	−2.4	276.4	.171	.665	248	2
395°	105	0	+221.	1336	279.7	+95.0	402.7	.206	.696	206	292.1
402°	105	0	+225.	1340	286.3	+97.6	405.1	.217	.707	196	2
.008	142		−7.0	1071	166.6	−1.8	249.4	.155	.668	273	301.1
.008	135	−45.1	−7.0	1033	182.8	−1.8	258.6	.177	.707	240	2
.0117	112	−27.2	−10.8	1073	192.8	−3.0	291.0	.179	.663	236	302
.01	102		−8.5	1117	216.6	−2.9	324.2	.194	.667	219	303
87.4°	126	−6.6	+58.0	1157	244.2	+20.0	325.4	.212	.752	201	304.1
91.5°	128		+60.5	1163	244.7	+20.2	321.0	.211	.763	202	2
0	96	−45	0	1084	201.9	0	328.8	.186	.614	228	311
.007	100	*−30*	−6.	1090	204.3	−1.9	322.9	.188	.633	226	312
.007	98	*−30*	−6.	1092	212.4	−1.9	328.2	.195	.647	217	313
0	110	*−25*	0	1093	205.9	0	317.5	.188	.649	225	314.1
230°	109	*−20*	+140.	1238	254.7	+54.4	372.3	.206	.683	206	2
140.5°	102	*−22*	+86.5	1187	233.4	+32.2	351.3	.197	.665	216	315
0	105	*−20*	0	1107	216.5	0	335.5	.196	.645	217	316.1
213°	105	*−15*	+132.	1244	264.6	+54.0	388.3	.213	.682	199	2

Italic figures mean assumed values.

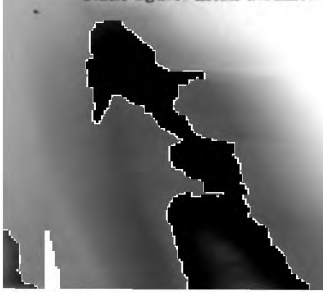

Digitized by Google

TABLE 75 D. PUMPING AND

No.	DIAMETERS	× STROKE	RATIO	CLEARANCES	TYPE
	WORTHINGTON TYPE PUMPING ENGINES				
331	30, 60	× 36	4.05		Hor. duplex Knowles
332	12, 18, 29	× 18	5.83		Hor. duplex Worth'n
336	18, 36	× 26	4.05		Hor. high-duty
337	33, 66	× 37.5	4.05		Hor. high-duty
	COMPOUND FLY-WHEEL PUMPING ENGINES				
341	21, 42	× 36	4.04	.036–.025	Hor. 2-ck. Holly
342	15, 30	× 30	4.09	.040–.037	Hor. 2-ck. Corliss
343	27, 54	× 120	4.02	.016–.015	Vertical Leavitt
344	34, 62	× 48	3.34	.012–.011	Vert. Allis-Chalmers
	TRIPLE-EXPANSION PUMPING ENGINES				
351	24, 38, 54	× 36	5.06	.025–.020	Hor. 3-ck. Corliss
352	21, 37, 55	× 48	6.95	.018–.021	Hor. 3-ck. Nordberg
353	28, 48, 74	× 60	7.11	.014–.008	Vert. 3-ck. Reynolds
354	14.2, 23.6, 34.4	× 39.4	6.19	.055–.060	Hor. 2-ck. Sulzer
355	13.7, 24.4, 39	× 72	8.11		Vert. 3-ck. Leavitt
356	20, 52, 80	× 60	7.66	.017–.025	Vert. 3-ck. Snow
357	22, 41.5, 62	× 60	7.95	.010–.005	Vert. 3-ck. Holly
358	30, 56, 87	× 66	8.45	.014–.005	Vert. 3-ck. Allis-Chal.
	ENGINES WITH REGENERATIVE FEED-HEATERS (NORDBERG)				
365	19.5, 29, 49.5, 57.5	× 42	8.75	.013–.004	Vert. 2-ck. Pump. Eng.
366	14.5, 22, 38, 54	× 48	14.19	.060–.035	Hor. 4-ck. Air-comp'r
	COMPOUND MARINE ENGINES				
371	16, 25	× 24	2.44	.049–.041	Vert. tandem
372	27.4, 50.3	× 33	3.40	.076–.050	Vert. 2-crank
373	30, 57	× 36	3.65	.094–.062	Vert. 2-crank
374	50.1, 97.1	× 72	3.78	.15 –.12	Inclined 2-crank
	MULTIPLE-EXPANSION MARINE ENGINES				
381	18.5, 27, 42	× 24	5.18	.160–.113	One, vert. 3-crank
382	29.4, 44, 70	× 48	5.70	.124–.080	One, vert. 3-crank
383	22, 34, 57	× 39	6.75		One, vert. 3-crank
384	33, 49, 74	× 39	5.02		Two, vert. 3-crank
385	34, 55.5, 64–64	× 48	7.12		Two, vert. 4-crank
386	29, 41.5, 59, 84	× 54	8.45		Two, vert. 4-crank

Digitized by Google

MARINE ENGINES. TABLE 75 D.

SERVICE	LOCATION	YEAR	REPORTED BY	REFERENCE	No.
Reservoir	Birm'gham, Ala.	1893	G. H. Barrus	E. R., Jan. 13, '94-109	331
Reservoir	St. Albans, Eng.	1899	E. H. Foster	A. S. M. E., 21-788	332
Experi'tal	Brooklyn	1885	J. G. Mair	*q* ENG. 1886, II. 340	336
Oil pipe-line	Pt. Jervis, N.Y.	1891	J. E. Denton	A. S. M. E., 12-975	337
Reservoir	S. Bethlehem, Pa.	1900	R. C. H. Heck		341
City water	Pawtucket, R.I.	1891	Wm. Kent	A. S. M. E., 13-176	342
Reservoir	Louisville	1894	F. W. Dean	A. S. M. E., 16-169	343
Reservoir	Omaha	1900	R. W. Hunt & Co.	E. R. Ju. 16, '00-574	344
Oil pipe-line	Laketon, Ind.	1893	J. E. Denton	A. S. M. E., 14-1341	351
Into mains	Grand Rapids	1896	M. E. Cooley—	A. S. M. E., 21-1019	352
City water	Milwaukee	1893	R. C. Carpenter	E. R., Dec. 2. '93-5	353
Lift of 1300 ft.	St. Gallen, Sw.	1897	A. Stodola	Z. V. D. I. '98, 265	354
City water	Boston	1895	E. F. Miller	Mass. In. Tech. Rep.	355
Into mains	Indianapolis	1898	W. F. M. Goss	A. S. M. E., 21-793	356
City water	Boston	1901	D. Brackett—	E. R., N. 16, '01-474	357
City water	Boston	1900	D. Brackett—	E. R., O. 13, '00-345	358
City water	Pittsburg	1899	R. C. Carpenter	E. R., Ap. 29, '99-495	365
Mine mach'y	Painesdale, M'h.	1906	O. P. Hood	A. S. M. E., 28-	366
Steamer	*Bache*	1874	C. E. Emery	ENG. 1875, I. 14	371
Steamer	*Fusi Yama*	1888	A. B. W. Kennedy, Committee Ins. M. E.	*q* ENG. 1890, I. 577	372
Steamer	*Colchester*	1889		*q* ENG. 1890, I. 605	373
Paddle str.	*Ville de Douvres*	1891		*q* ENG. 1892, I. 586	374
Ferryboat	*Bergen*	1888	E. A. Stevens—	A. S. M. E., 11-372	381
Steamer	*Meteor*	1888	A. B. W. Kennedy, C. In. M. E.	*q* ENG. 1889, I. 527	382
Steamer	*Iona*	1890		*q* ENG. 1891, I. 568	383
Cruiser	*Minerva*	1896	Adm. Com. R. N.	*q* ENG. 1902, I. 326	384
Cruiser	*Argonaut*	1898	Sir J. Durston	*q* ENG. 1899, I. 432	385
Steamer	*Saxonia*	1900	Adm. Com. R. N.	*q* ENG. 1902, I. 326	386

Digitized by Google

TABLE 75 D. PUMPING AND

No.	CONDITION	N	V	p_{1A}	p_{2A}	e	r	p_m	H	S_H	J
331	TC2JHF	16.1	98	105.6	2.3	1.00	4.0	29.2	477	29.23	
332.1	PC3JHF	33.7	103	104.2	2.4	1.00	5.7	25.7	105	16.59	.07
2	N	33.0	102	103.7	2.4	1.00	5.7	25.6	105	16.94	—
336	PC2JHF	45.0	195	74.0	1.5	.45	8.2	20.9	119	17.17	.12
337	TC2JHM	20.1	126	103.6	2.2	.33	13.8	17.5	457	16.40	.16
341	TC2JF	20.2	121	104.7	2.0	.42	9.1	27.7	281	15 63	.12
342.1	PC2JF	48.2	241	138.1	1.05			27.7	142	13 84	.05
2	N	48.0	240	138.3	1.4			27.6	141	14.26	—
343	TC2JHF	18.6	372	151.6	1.0	.20	20.2	25.0	643	12.22	.16
344	TC2JHC	22.7	181	118.3	1.5	.15	20.5	20.8	357	12.35	.11
351.1	TC3JHF	27.8	167	165.4	1.78	.22	20.8	27.9	323	13.83	.17
2	N	27.7	166	165.6	1.84	.31	15.4	28.6	328	14.09	—
3	J_3	27.8	167	127.7	1.83	.36	13.4	27.9	322	14.33	.15
352.1	TC3JHF	39.9	319	138.8	1.72	.31	22.1	22.2	510	12.74	.13
2		30.1	241	139.4	1.79	.28	23.9	21.8	376	13.33	.15
3		19.1	158	140.3	1.76	.25	27.2	20.9	229	13.90	.17
353	TC3JHF	20.3	203	135.9	1.2	.35	19.6	21.7	574	11.80	.09
354.1	PC3JF	60.3	395	162.1	1.4			18.9	207	11.70	.14
2		30.6	201	165.2	1.3			18.1	101	12.78	.14
355	TC3JHC	50.6	607	190.7	1.45	.38	20.6	26.5	576	11.22	.14
356	TC3JHC	21.2	212	168.9	1.6	.33	22.6	24.4	783	11.50	.06
357	TC3JHC	24.9	249	165.6	1.4			20.5	465	11.09	.13
358	TC3JHC	17.7	195	201.9	0.83			22.8	802	10.48	.15
365	TC4JHC	36.5	255	214.1	1.15			35.4	712	12.42	
366	TC4JHC	56.9	455	256.8	1.25			31.3	990	11.92	
371.1	TC2NF	49.3	197	95.0	2.6	.41	5.0	29.8	86	23.21	—
2	J_2	54.7	219	94.7	2.2	.39	6.9	32.7	105	21.26	.05
372	TC2NF	55.6	306	71.5	2.3	.64	5.0	19.9	371	21.17	—
373	TC2NF	86.6	532	95.2	2.5	.62	5.4	24.8	1980	21.73	—
374	TC2NM	36.8	442	120.5	4.7	.63	5.4	30.2	2977	19.41	—
381	TC3NF	144	576	129	1.4	.63		27.5	665	18.3	—
382	TC3JF	71.8	574	153	2.73	.50		29.9	1994	14.98	
383	TC3JF	61.1	398	179.6	0.70	.37		21.1	645	13.35	.0
384.1	TC3JC	83.5	642	95	1.3			15.2	2142	15.90	.0
2		109.5	711	148	1.75			26.9	4963	14.13	.0
3		128.6	835	151	1.8			37.4	8132	16.30	.0
385.1	TC3NC	76.4	611	83	1.9	.73	8.3	16.2	3867	17.72	—
2		75.1	601	184	2.1	.27	15.7	16.1	3762	16.26	—
3		116.5	932	189	1.9	.73	8.3	37.9	13766	15.98	—
4		115.3	922	245	1.7	.53	10.4	38.3	13788	15.44	—
5		127.7	1022	259	2.1	.71	8.5	47.2	18781	15.75	—
386	TC4NC	77.8	700	207	2.3			38.8	9099	13.47	—

For meaning of symbols see pages 602 to 606.

Digitized by Google

MARINE ENGINES. TABLE 75 D.

m, t_3	t_2	q_H	h	Q	W	w	W_R	E_A	E_R	Q_M	No.
020	132	*−25*	−17.6	1041	87.0	−4.5	246.6	.084	.353	508	331
43°	133	−16.1	+83.2	1149	153.4	+26.2	274.0	.134	.561	317	332.1
54°	133		+89.3	1171	150.3	+28.7	276.2	.128	.544	330	2
2.5°	116	−23.9	+28.1	1096	148.3	+7.5	257.4	.135	.577	313	336
01	130	−32.6	−8.8	1042	155.2	−2.2	249.8	.149	.622	284	337
01	126	−26.4	−8.8	1053	162.8	−2.3	255.5	.154	.635	276	341
3.5°	104	−14.3	+2.2	1105	184.0	+0.9	307.8	.167	.598	255	342.1
0.9°	114		+6.9	1115	178.5	+2.6	296.9	.156	.601	272	2
.0055	102	−43.7	−4.8	1073	208.3	−1.5	315.2	.194	.661	218	343
.01	116	−25.9	−8.7	1067	206.1	−2.5	278.2	.194	.740	219	344
.0217	122	−44.2	−18.6	1041	183.5	−5.5	288.5	.176	.636	241	351.1
.020	123		−17.9	1084	180.9	−5.0	287.5	.167	.629	254	2
.0225	123	−33.6	−19.5	1043	177.7	−5.4	270.3	.170	.657	249	3
0	121	−26.4	0	1074	199.8	0	284.3	.186	.703	228	352.1
0	122	−30.0	0	1069	191.0	0	282.5	.179	.677	237	2
0	122	−37.0	0	1063	183.0	0	283.9	.172	.645	247	3
.0105	108	−19.9	−9.1	1084	215.7	−2.7	298.0	.199	.723	213	353
269°	114	−32.0	+159	1239	219.2	+63.0	367.7	.177	.596	240	354.1
262°	111	−33.0	+155	1237	199.2	+61.9	371.6	.161	.537	264	2
0	115	−36.4	0	1078	226.8	0	313.7	.211	.723	202	355
.010	118	−13.7	−8.5	1086	221.3	−2.6	298.1	.204	.743	208	356
.007	114	−27.5	−6.0	1075	229.5	−1.8	304.2	.214	.755	199	357
.0137	96	−36.5	−11.5	1087	242.8	−3.9	340.5	.224	.714	190	358
.0126	106.7	−206.0	−10.6	909	204.9	.326		.226	.691	188	365
.0574	109.5	−228.1	−47.8	851	213.5	.334		.251	.751	169	366
.02	136		−17.7	1059	109.7	−4.2	233.1	.104	.472	408	371.1
.02	130	−10.2	−17.7	1055	119.7	−4.4	241.7	.114	.496	373	2
.02	132		−18.0	1057	120.2	−4.1	221.0	.114	.544	373	372
.02	135		−17.7	1060	117.1	−4.3	235.4	.110	.498	384	373
.02	160		−17.5	1041	131.1	−4.0	217.1	.126	.605	336	374
008	114		−7.0	1099	139.0	−2.0	287.5	.127	.483	336	381
015	138	*−15*	−12.9	1058	170.0	−3.5	263.4	.161	.645	264	382
015	90	−12.0	−12.7	1115	190.7	−4.3	340.0	.171	.561	248	383
0	111	−3.8	0	1108	160.1	0	273.5	.145	.587	292	384.1
01	121	−8.6	−8.6	1084	180.2	−2.5	285.1	.166	.633	255	2
01	122	−5.3	−8.6	1087	156.2	−2.5	285.0	.144	.548	295	3
0	124		0	1085	143.7	0	245.1	.133	.587	320	385.1
0	128		0	1100	156.5	0	292.9	.142	.534	298	2
0	124		0	1104	159.2	0	299.7	.144	.532	294	3
015	120		−12.4	1103	164.8	−4.0	318.7	.149	.517	284	4
005	128		−4.1	1105	161.6	−1.3	314.5	.146	.514	290	5
015	132		−12.6	1087	189.0	−3.8	293.2	.174	.645	244	386

Italic figures mean assumed values.

Digitized by Google

TABLE 75 E. STEAM-TURBINES.

No.	Size	Type	Location	Year	Reported by	Reference
			SINGLE-STAGE ONE-IMPULSE TURBINES.			
401	30 H.P.	De Laval	Dresden	1901	E. Lewicki	Z. V. D. I.
402	50 H.P.	De Laval	Glasgow	1905	T. B. Morley	ENG. 1905
403	100 H.P.	De Laval	Lods	1901		Z. V. D. I.
404	300 H.P.	De Laval	Trenton	1902	Dean & Main	E. R., Aug. 2
409	2000 H.P.	Riedler-Stumpf	Berlin	1902	A. Riedler	*q* STOD. II. E.
			MULTIPLE-STAGE SINGLE-IMPULSE TURBINES.			
411	500 H.P.	Rateau	Paris	1903	A. Stodola	STOD. II. E.
412	1000 Kw.	Rateau	Zurich	1903	Oerlikon Works	STOD. II. E.
413	300 H.P.	Rateau L.P.		1902	Sauvage & Picou	STOD. II. E.
414	700 H.P.	Rateau L.P.	Hallside W'ks	1906		ENG. 1906
421	500 H.P.	Zoelly	Zurich	1904	A. Stodola	STOD. II. E.
			MULTIPLE-STAGE MULTIPLE-IMPULSE TURBINES.			
431	50 H.P.	Elektra		1905	Prof. Gutermuth	STOD. III.
441	500 Kw.	Curtis	Newport, R. I.	1904	G. H. Barrus	Report
442	500 Kw.	Curtis	Cork, Ire.	1904	C. H. Mertz	ENG. 1904
443	500 Kw.	Curtis	Revere, Mass.	1906	W. H. Trask, Jr.	* BURLEIGH
444	2000 Kw.	Curtis	Schenectady	1905	Sargent & Ferguson	Report
445	5000 Kw.	Curtis	Schenectady	1906	W. L. R. Emmet	Gen. Elec.
			PARSONS TURBINES.			
451	400 Kw.	Westinghouse	Pittsburg	1903	Dean & Main (55)	F. Hodgkinson
452	1250 Kw.	Westinghouse	Pittsburg	1903	J. Kennedy (41)	A. S. M. E.
453	3000 Kw.	Brown-Boveri	Frankfort-a-M.	1904	—Singer	*q* Z. V. D. I.
			MIXED-TYPE TURBINES.			
461	50 H.P.	Union	Essen	1905		† Stev. & Hob.
466	500 Kw.	H.-P.-S. ††	Munich	1906	M. Schroter	ENG. 1906

* "The Vertical Steam Turbine." Paper by C. B. Burleigh, Nat. Assoc. Cotton Mfrs., 1904.
† Stevens & Hobart, "Steam Turbine Engineering."
†† H.-P.-S. = Helms-Pfenninger-Sankey.

ADDITIONAL DATA FOR TABLE 75 F, SHOWING PARTICULARS AS TO ENGINES NOT INCLUDED IN PRECEDING TABLES (ITALIC NUMBERS).

229	Scott Central-valve vert. compound			ENG. 1900
230	Two Reavell engines, vert. compound			ENG'R, 1905
245	23, 48 × 48 } McIntosh & Seymour		L. S. Marks	A. S. M. E.
246	29, 60 × 56 } vert. two-crank			
261	16, 30 × 42	Hor. tand. Corliss	E. J. Willis	*q* E. R. Dec.
262	20, 38 × 48	Hor. cross-comp. Corliss	Stone & Webster	E. R., Mar.
263	26, 50 × 48	Hor. cross-comp. Corliss	G. H. Barrus	E. R. Nov.

Digitized by Google

TABLE 75 F. ENGINE AND GENERATOR EFFICIENCIES.

No.	COND.	SIZE *	N	p_{IA}	t_s	H	K	K/H	E_C	S_H	S_K
?16	TA2	16 ×14	265	115	——	108	67	.627	.841	23.1	36.8
?14	TA2	20 ×13	271	181	——	188	161	.638	.856	21.1	33.1
?29.1	TA2	16 ×8	408	175	——	84	48	.576	.772	19.2	33.0
2			412	175	——	43	24	.563	.755	21.5	38.2
3	C		412	172	——	94	58	.610	.818	16.8	27.6
4			412	174	——	43	24	.568	.761	17.3	30.4
?30.1	TA2	150 Kw.	346	150	——	246	150	.612	.82	19.1	31.3
2	TC2	100 Kw.	446	150	——	160	100	.626	.84	15.5	24.7
?24	PA2		302	169	107°	600	358	.597	.800	15.9	26.8
?25.1	TC2			167	——	360	226	.627	.841	16.9	27.0
2	P			173	150°	360	227	.629	.843	13.4	21.3
?27	PC3			180	112°	1298	775	.602	.807	11.1	18.3
?36	TC2	40½ ×27	150	167	——	502	323	.664	.864	12.7	19.7
?45	PC2	48 ×48	102	164	9°	1047	674	.643	.863	13.6	21.3
?46.1	PC2	60 ×56	98	169	80°	2267	1540	.678	.910	12.7	18.7
2			98	163	98°	2202	1495	.678	.910	11.6	17.1
?52	TC2	22 ×42	114	126	——	185	122	.643	.864	19.9	30.9
?61	TC2	30 ×42	100	127	——	373	219	.587	.787	13.8	23.5
?62	TC2	38 ×48	107	127	——	709	469	.661	.886	15.3	23.1
?63	TC2	50 ×48	78	151	——	1031	690	.668	.896	13.2	19.8
?71.3	TC2	76.6 ×60	76	209	——	1482	867	.606	.814	15.9	26.2
4		76.6	76	198	——	5274	3740	.708	.950	12.2	17.2
5			76	187	——	6326	4483	.708	.948	12.4	17.6
?59.2	PC2	86 ×60	75	190	6°	7365	5079	.690	.924	12.0	17.3
?86.1	TC2	22 ×33.5		200	——	308	190	.618	.829	13.6	22.0
2				192	——	165	99	.598	.802	11.8	19.1
3	P			*200*	225°	310	190	.614	.823	10.9	17.7
4				*200*	225°	165	99	.598	.802	9.7	16.2
?93.1	PC2	24 ×28	140	155	390°	312	190	.610	.817	9.4	15.4
2			140	155	390°	239	143	.600	.804	9.0	15.0
3			140	155	390°	175	97	.554	.743	9.5	17.2
?04.1	PC3	48 ×36	100	214	87°	1177	719	.610	.817	10.4	17.1
3			100	213	84°	850	503	.590	.792	9.9	16.8

For meaning of symbols see pages 602 to 606.
* Under "Size" are here given the diameter of the L.P. cylinder and the stroke.

SUPPLEMENT TO TABLE 75 F—*Continued.*

?86 12.8, 22.0×33.5 Van den Kerchove (Fig. 506) horizontal tandem 250 H.P. engine, Ghent, 1902 M. Schroeter ENG'R, 1903 I. 192

?93 15, 24×28 horiz. tandem, lift valves, positive gear, Schmidt separate superheater. Brantham, 1902 J. A. Ewing ENG'R, 1903 I. 46

Digitized by Google

TABLE 75 E. TESTS OF

No.	CONDITION	N	p_{1A}	p_{2A}	K	B	E_E	E_M	K/H	$S_{K,2}$
401.1	TABC	2014	99.1	14.5		43.5		.94		39.53 B
2	P	2354	99.1	14.45		25.0		.92		33.85 B
3	P	2096	99.3	14.65		51.2		.95		25.68 B
402	TCEF	1635	187	1.59		48.0		.95		21.9 B
403	TCBF	1076	186.2	2.28		242.1		.95		17.20 B
404.1	TCEF	747	221.1	1.67		333.0		.95		15.51 B
2		751	216.2	0.84		118.9		.92		16.77 B
3	P	750	221.8	1.47		352.0		.95		13.94 B
409.1	PCEC	3000	203	2.14	1365	1928	.95	.97	.688	13.68 B
2	B	3800	185	1.22	1340	1891	.95	.97	.688	12.33 B
411.1	TCEC	2184	176.1	1.29	107.5	171.6	.84	.90	.564	30.42 K
2	P	2101	168.5	1.64	366.0	530.8	.924	.95	.655	22.60 K
3	P	2360	223.7	2.15	462.9	664.9	.933	.96	.669	22.09 K
412.1	TCEC	1500	179.2	2.43	1024		.95	.97	.688	21.98 K
2		1500	186.3	1.11	194		.85	.90	.571	31.97 K
413	PAEC	1598	14.7	2.79	232.5		.93	.96	.666	39.97 K
414	TAEC	1500	14.7	1.0	450		.94	.96	.673	36.6 K
421.1	TCEC	2967	158.8	1.03	387.7		.94	.96	.673	21.48 K
2		2995	157.1	0.74	80.1		.84	.90	.564	33.07 K
3	P	2970	160.1	0.99	390.4		.94	.96	.673	19.80 K
431.1	PCEC	3524	145.8	2.43		44.4		.94		27.37 B
2		3181	143.9	1.78		58.5		.95		20.16 B
3	A	3331	146.7	14.7		38.8		.94		32.53 B
441.1	TCEF	1815	165	1.0	529.4		.93	.96	.660	19.78 K
2	P	1815	165	1.0	514.7		.93	.96	.660	15.91 K
442	PCEC	1820	168	1.5	512		.93	.96	.660	20.5 K
443	TCEC	1820	167	0.6	521.9		.93	.96	.660	18.75 K
444.1	PCEC	900	181	0.73	2024		.945	.96	.676	15.02 K
2		900	170.2	0.71	555		.90	.92	.631	18.09 K
445	PCEC	750	190	1.0	4800		.955	.97	.691	14.97 K
451.1	TCBC	3549	169.6	1.46		593.5		.96		14.35 B
2		3545	169.1	0.99		593.5		.96		13.91 B
3	P	3544	164.9	0.98		593		.96		12.50 B
4		3543	168.2	0.93		592		.96		11.46 B
452.1	TCEC	1196	161.7	1.42	1322		.95	.97	.688	19.46 K
2	P	1201	160.9	1.42	1294		.95	.97	.688	18.48 K
3	T	1197	160.7	0.94	1364		.95	.97	.688	18.80 K
4	P	1199	160.6	0.93	1274		.95	.97	.688	17.63 K
453.1	PCEC		199	1.42	3000		.95	.97	.688	14.30 K
2			142	1.42	3000		.95	.97		16.82 K
461	PCBC	3542	157.3	1.4				.95		20.6 B
466	PCEC	2548	191	0.48	504			.96	.680	17.2 K

For meaning of symbols, see pages 603 to 60

Digitized by Google

EAM-TURBINES. TABLE 75 E.

x	m, t_3	t_2	h	Q	W	w	W_R	E_A	E_R	Q_M	No.
16	0	211	0	1002	68.5	0	139.2	.068	.492	620	401.1
14	327°	211	+181	1183	81.8	+51.3	190.5	.069	.430	615	2
40	604°	212	+322	1323	104.3	+97.7	202.0	.079	.517	538	3
80	.007	118	−5.9	1105	122.4	− 1.8	306.0	.111	.400	382	402
34	30.6°	131	+20	1117	155.8	+ 6.4	295.8	.139	.527	304	403
75	.0215	120	−18.0	1095	172.7	− 5.8	311.0	.158	.555	269	404.1
34	.0215	96	−18.0	1118	166.0	− 6.2	341.7	.149	.487	285	2
24	84°	115	+55.8	1174	192.2	+19.3	342.5	.164	.562	259	3
45	179°	129	+113	1215	189.4	+40.4	342.0	.156	.554	272	409.1
98	197°	109	+121	1241	212.4	+46.3	366.2	.171	.580	248	2
16	5.2°	111	+ 3.4	1120	148.3	+ 0.9	315.1	.124	.472	359	411.1
80	20.0°	119	+13.0	1120	172.0	+ 3.9	303.3	.143	.567	310	2
77	23.6°	129	+16.2	1119	172.3	+ 5.3	307.7	.144	.561	307	3
11	.0052	133	− 4.3	1090	168.5	− 1.3	282.3	.155	.597	274	412.1
24	.0153	105	−13.0	1110	139.6	− 4.2	321.0	.126	.435	338	2
62	84.5°	139	+40.5	1080	95.6	+ 6.4	115.8	.089	.825	480	413
65	0	102	0	1077	103.2	0	168.3	.096	.615	442	414
46	7.0°	103	+ 4.5	1126	176.2	+ 1.2	320.6	.157	.549	271	421.1
66	3.1°	92	+ 2.0	1134	136.4	+ 0.5	334.7	.120	.408	353	2
33	76.5°	102	+48.2	1171	191.0	+18.4	338.7	.163	.563	260	3
73	196°	134	+116.8	1206	99.0	+37.6	307.3	.082	.322	517	431.1
15	105°	122	+64.5	1165	132.9	+22.2	307.0	.114	.433	372	2
58	104°	212	+64.0	1074	83.3	+14.2	181.0	.078	.460	548	3
18	0	102	0	1123	193.2	0	322.1	.172	.600	246	441.1
59	290°	102	+176	1300	240.3	+73.8	395.9	.185	.608	229	2
66	104°	116	+65	1176	186.5	+22.1	325.8	.159	.573	267	442
48	.012	86	−10.2	1130	203.8	− 3.3	343.4	.180	.595	235	443
15	207°	92	+126	1262	250.7	+51.4	394.5	.199	.635	214	444.1
40	204°	91	+125	1261	223.3	+50.7	391.0	.177	.573	239	2
34	150°	102	+89.5	1216	246.2	+31.2	362.5	.203	.680	209	445
78	0	115	0	1112	184.8	0	305.6	.166	.604	256	451.1
35	.001	102	−0.9	1123	190.7	− 0.3	323.9	.170	.588	250	2
00	104°	101	+65.3	1189	212.1	+23.8	346.8	.179	.612	238	3
00	180°	100	+110	1237	231.3	+42.4	369.2	.187	.627	227	4
37	0	114	0	1111	190.4	0	303.9	.171	.626	248	452.1
70	76°	114	+47.8	1159	200.4	+16.2	319.7	.173	.647	245	2
92	0	100	0	1125	197.0	0	323.4	.175	.610	242	3
12	78°	100	+49	1174	210.0	+16.7	340.3	.179	.617	237	4
83	190°	114	+119	1235	258.9	+45.7	363.3	.210	.713	202	453.1
57	90°	114	+55.5	1163	220.0	+18.7	314.0	.189	.700	224	1
57	117°	114	+72	1193	130.1	+25.2	327.9	.109	.397	388	461
67	223°	79	+137	1288	218.0	+58.5	423.9	.170	.514	250	466

[redacted] figures mean assumed values.

Digitized by Google

TABLE 75 G. MECHANICAL EFFICIENCY OF ENGINES.

No.	Cond.	Size	N	p_{iA}	H	$B.D$	Diff.	E_M
		POWER ENGINES.						
151	TA1	7½×10	172	135	13.9	11.4	2.5	.819
152	TA1	8½×15	136	140	23.4	17.0	6.4	.724
211	TA2	9 ×11	173	140	21.1	17.3	3.8	.818
212	TA2	9½×10	160	265	18.6	17.6	1.0	.947
213	TA2	9 ×15	149	170	24.0	22.0	2.0	.877
172	PA1	7.1×11.8	200	143	22.8	18.6	4.2	.818
221	PC2	27.3×19.8	117	183	73.3	62.0	11.3	.847
112.3	TC1	9 ×36	84	113	73.1	70.7	2.4	.967
4			87	115	30.3	27.6	2.7	.912
5			89	114	9.5	7.5	2.0	.788
251.3	TC2	16×36	84	121	98.6	92.1	6.5	.934
4			85	121	67.1	60.7	6.4	.906
5			86	124	35.7	29.4	6.3	.824
6			88	128	13.8	8.1	5.7	.587
301.3	TC3	24×36	83	132	141.0	122.5	18.5	.870
4			85	129	89.2	72.3	16.9	.811
5			88	130	24.5	9.6	14.9	.392
302	TC3	30×36	75	137	234.3	223.9	10.4	.956
		LOCOMOTIVES.						
181.1	TA1	22×28	40	218	454.5	373.5	81.0	.802
2			80	215	779.3	629.8	149.5	.808
3			120	210	1005.6	818.4	187.2	.813
4			159	196	930.0	743.2	246.8	.750
5			161	187	803.0	596.0	207.0	.742
201.1	TA2	35×32	40	224	477.3	445.1	32.2	.933
2			80	223	986.5	925.7	60.8	.938
3			120	224	940.9	770.5	170.4	.820

No.	Cond.	Size	N	p_{iA}	H	$D.P$	Diff.	E_M
		LOCOMOTIVES—*Continued.*						
202.1	TA2	23.7×25.2	160	229	631.4	509.6	121.8	.807
2			240	230	1257.9	1136.2	121.7	.905
203.1	TA2	25×26	160	237	1296	1144	152	.884
2			240	232	1529	1199	330	.784
204.1	PA2	22.1×23.2	80	216	481	447	34	.930
2			160	214	742	653	89	.881
3			240	208	744	613	131	.623
		PUMPING-ENGINES.						
331	TC2	60×36	16	106	477.0	454.3	22.7	.953
332	PC3	29×18	33	104	105.1	96.5	8.6	.923
336	PC2	36×26	45	74	119.2	109.3	9.9	.917
337	TC2	66×37.5	20	104	456.7	439.9	16.8	.964
343	TC2	54×120	19	152	643.4	599.1	44.3	.931
344	TC2	62×48	23	118	356.8	308.9	47.9	.869
351.1	TC3	54×36	28	165	322.6	301.0	21.6	.933
352.1	TC3	55×48	40	139	509.8	477.0	32.8	.937
2			30	139	376.4	360.1	16.3	.932
3			19	140	228.6	218.6	10.0	.956
353	TC3	74×60	20	136	573.9	517.7	56.2	.902
354.1	PC3	34.4×39.4	60	162	206.8	167.8	39.0	.810
2			31	165	101.0	83.8	17.2	.830
355	TC3	39×72	51	191	575.7	515.1	60.6	.895
356	TC3	80×60	21	169	782.9	734.5	48.4	.938
357	TC3	62×60	25	166	464.5	448.4	16.1	.965
358	TC3	87×60	18	202	801.6	747.8	53.8	.933
365	TC4	57.5×42	37	214	712.2	660.3	51.9	.927
401	TC4	54×48	57	157	980.7	891.3	89.4	.909

Digitized by Google

[From page 607]

The most extensive collection of data as to lift-valve engines (with a few of other types) is that of "One Hundred Tests" of engines built at Augsburg, by J. Krumper, in Z. V. D. I. for 1905, of which a number are used in the tables.

The two engines which are most markedly of American development are the large compound Corliss and the large triple-expansion pumping-engine. The use of the higher grades of expansion in stationary power engines belongs mostly to European practice.

After the early experiments of Isherwood and Emery, the comparatively small amount of data that is available as to the steam-economy of marine engines comes mostly from English sources.

As to the quality of these data, it must be understood that the results got by special tests are likely to be quite a little better than the average working of engines of the class. Tests are generally made when the engine is comparatively new and in good condition, with a minimum of leakage; further, poor results have a tendency to be suppressed rather than to be made public. Occasionally reports get into print which are too good to be true; a few such have been included in the tables, intentionally, and a few remarks in regard to them will be found in § 76 (*n*).

§ 76. Observations, Results, and Calculations.

(*a*) General Conditions.—We shall now take up the matter presented in the numerical portion of Tables A to D, noting the character and variation of the leading data, reviewing the methods of calculating the thermal performance, and briefly summarizing the results shown—thus preparing the way for the discussion of certain important influences upon the performance of both engine and turbine. The quantities got by observation are given on the left-hand page (with one column of the second page), and are the first to be considered.

Speed.—The data under N and V (R.P.M. and piston speed) add a large number of actual examples to the summary presented in § 41 (*u*). In Table A we see the variation from 9 R.P.M. and 160 ft. in an old-fashioned marine engine (No. 102) to 100 R.P.M. and 800 ft. in a quick-running Corliss (No. 115). For contem-

Digitized by Google

porary practice, the widest contrast is shown in Table D, between pumping and marine engines. The abnormally high piston-speed in No. 355 is made possible by a mechanism which gives the pump a shorter stroke than that of the engine (4 ft. instead of 6 ft.). Running over these columns in the several tables we find that the general statements in § 41 (*u*) are very well supported.

Speed exerts quite an influence upon the performance of the steam in the engine. On the mechanical side, or that of steam-movement, low speed is favorable; the high-speed engine must have large ports (which means large waste spaces), and even then is likely to show excessive pressure-losses. In this connection linear velocity is the directly determinant influence: although we must note that, with steam-passages of a proper area with reference to the size of piston and its mean speed, the short-stroke engine will have a relatively much larger clearance-volume than will the long-stroke machine of smaller R.P.M.—that is, if the valves can be placed at the ends of the cylinder in both cases. Considering thermal losses, high speed becomes desirable, in the form of high R.P.M. or the diminution of the actual time occupied by the cycle of operations within the cylinder.

Speed is, of course, a prime factor in the capital cost of the power plant; upon it depends very largely the rate of work that can be got out of a given size and weight (or, approximately, cost) of engine. In many cases, of course, the designed speed of the engine is fixed by the service for which it is intended.

(*b*) PRESSURES.—The limiting pressures—p_1, from which steam is admitted, and p_2 to which it is exhausted—determine the possible magnitude of the energy-transformation process; they are best reduced to absolute values, so as to eliminate the variant atmospheric pressure and to put them into shape for use in subsequent calculations.

A properly full report of an engine-test should give steam-pressure at boiler, at engine-throttle, perhaps in steam-chest, in exhaust-pipe, and in condenser, besides the highest [illegible] pressure and the mean and lowest exhaust [illegible] dicator diagrams. Actual tests covering [illegible] conditions vary greatly as to the fullness

Digitized by Google

do give. In the tables it is intended that all the pressure-losses from the steam as supplied at the inlet point and all back-pressure above a nearby exhaust outlet shall be included in the working of the engine.

After an inspection of the boiler-pressure column, we may summarize what is shown as to various lines of practice about as follows now giving gage-pressure rather than absolute:

Going back to 1860, we see simple marine engines on steam at 25 lbs. Simple power engines of the usual types work on 70 to 90 lbs., compound engines on 110 to 150, triples and high-ratio compounds on 120 to 200—the higher values belonging to the more recent installations. The locomotive carries 180 to 220 lbs. In modern ships with water-tube boilers it is quite usual to make steam at 300 lbs., then reduce it to 250 lbs. at the engine, with the idea of drying the steam by throttling-action—although in the adoption of this scheme there does not seem to be a very clear appreciation of the smallness of the thermal action involved in this pressure-change, the difference in total heat being only 5 B.T.U.

In regard to pressure-losses, it may be stated as a rough generalization that for well-arranged engines which govern by cut-off and run on "full throttle", the drop from boiler to cylinder will range from 3 to 7 per cent., becoming even greater with early cut-off and more wire-drawing by the engine-valve. In non-condensing engines with free exhaust, the back-pressure above atmosphere is likely to be from 0.5 to 1.5 lbs., and is often a good deal higher. With a condenser showing an absolute pressure of 1.5 to 2.0 lbs. (26 to 27 ins. of vacuum), the additional back-pressure in the cylinder will usually be from 0.5 to 1.0 lb. In the turbine, where high vacuum can be much more effectively utilized, this pressure-difference is diminished by the employment of very large and short exhaust-connections.

The greatest back-pressure is found in the locomotive, due partly to rather small passages, very largely to the choke of the exhaust-nozzle. To get a working basis for the locomotive tests which would make this engine properly comparable with the others, an arbitrary rule was adopted by the writer, as follows:

If p_b is the average back-pressure above atmosphere in the

Digitized by Google

cylinder, measured from the diagrams, then the relation between p_b and the exhaust-pressure p_{2A} properly chargeable to the engine alone, as distinguished from the blast-apparatus, was taken to be

p_b	p_{2A}	p_b	p_{2A}	p_b	p_{2A}
1 or less	15.0	4	16.6	8	20.0
2	15.5	5	17.3	9	21.0
3	16.0	6	18.0	10	22.0
		7	19.0		

Of the important observed quantities in a test, the exhaust-pressure in a condensing steam-plant is the one which has usually been determined with the least accuracy, especially in the earlier work. Discussion of this point will be found in § 77 (*b*).

(*c*) EXPANSION OF THE STEAM.—The behavior of the steam both in general and in detail, can best be shown graphically, as by the representative diagrams in § 69. As a rough measure of the degree of expansion, the initial cut-off e and the total ratio of expansion r are here given, for all the cases where the original report contained the necessary data. The ratio thus expressed—see the definition on page 603—may differ quite a little from the true ratio of the final to the initial effective volume of the working steam which would be got by the method of § 19 (*f*), easily extended to the compound engine, and very conveniently applied directly to the combined diagram.

The general purpose of all the economy devices, especially overpounding and steam-jacketing, is to make possible a full expansion of the steam in the engine, without the development of overwhelming losses on account of thermal interactions; but since the primary measurement of economy depends only on power and steam-consumption, we see that the form of the steam diagram has chiefly a qualitative value, showing how and why certain results are secured, but not in itself making known the value of the results. These considerations reinforce the initial statement of this article as to the advantage of a diagram over the tabulation of measurements expressed numerically.

(*d*) MEAN PRESSURE.—The mean effective pressure p_m, reduced to the L.P. piston in all the multiple-expansion engines, is chiefly

Digitized by Google

importance as one of the two factors determining the power of the engine; and in comparison with the initial pressure p_1 it helps to indicate the amount of expansion that is realized. The first question to be settled in designing an engine which shall work under certain conditions is the value of this mean pressure. The examples in the tables vary quite widely, but it is fairly representative to say that most of the simple engines develop their normal power on from 30 to 40 lbs. M.E.P, while for the higher ratio engines the majority of values lie within the range from 20 to 25 lbs. In general, the transportation engines, both locomotive and marine, show higher mean pressures or a greater concentration of power. Further data on this point have been given in Tables 70 A to C, in connection with the subject of cylinder proportions.

(e) HORSE-POWER AND STEAM-CONSUMPTION.—These two quantities are overwhelmingly the most important determinations in a steam test; and their accurate measurement is less simple than may at first sight appear, and is by no means always realized. The indicator is not an instrument of precision, although with reasonable and proper care and skill it will give substantially correct results. The measurement of engine-power is most difficult when the load fluctuates, and it is always desirable to secure a steady and uniform load during the time of the test, if possible. The typical case of irregular fluctuation is found in a generator-engine supplying power for electric-railway service. As an example of the method which gives the best results under such conditions, we may cite the large engine in Test 259 Table C: here the effective power was measured electrically, and to it was added the combined engine and generator losses as found by "motoring" the unit with the engines empty. This same scheme can be used with turbines, when, however, it will include rotation losses also, besides the electrical and purely mechanical wastes of power.

As to the measurement of steam used, there is obviously more room for error in the feed-water method, and the tests must be of considerable length (at least four or five hours), in order to minimize the uncertainty as to the exact quantity of water held in the boiler. With a good surface-condenser the runs may be much shorter, say of one hour's duration. With large and complicated

Digitized by Google

engines there will be a number of subsidiary quantities to measure in the way of separator, receiver, and jacket-drains.

The magnitude of the steam-consumption can be better discussed after the thermodynamic efficiency has been developed as a criterion of performance, and this side of the subject will be found in Arts. (*l*) to (*n*).

(*f*) QUALITY OF STEAM.—The moisture-fraction m and the superheat t_s are given in the same column, since they cannot be

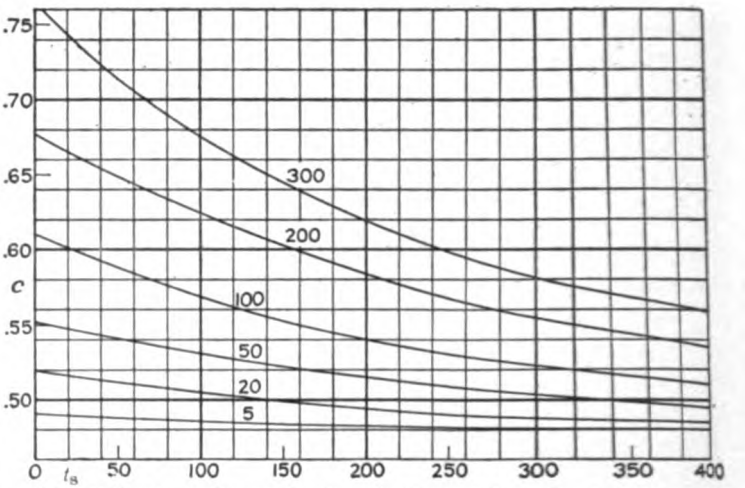

FIG. 685.—Callendar's Curves for Specific Heat of Superheated Steam: from paper by Prof. H. L. Callendar in Phil. Trans. Roy. Soc., 1902. t_s = degrees of superheat, Fahr.; c = specific heat under constant pressure; each curve shows how c varies for the absolute steam-pressure marked on the curve.

coexistent. As to the former, quite one-half of the values are here assumed, since so many of the tests were made before the steam-calorimeter came into general use. In the matter of superheat the chief question is the amount of heat involved, given under h. To get this the writer has used Callendar's curves, reproduced in Fig. 685. The mean values of c for the given range and pressure are estimated from the diagram, with graphical interpolation, and are used in calculating h and w. It is not given in the table on account of lack of space, but can easily be found by dividing h by

Digitized by Google

t_s. Callendar's curves are by no means the last word on the subject of the specific heat of superheated steam, but are quite accurate enough for all practical purposes in the present connection. It will be noted that the writer's independent suggestion in Fig. 190 is along the same line.

(*g*) HEAT-CONSUMPTION.—The derivation of the heat of formation Q of one pound of the steam used in the engine is outlined in the definition, § 75 (*d*). The feed-water supplied to the boiler is made up chiefly of water at the ideal temperature t_2 belonging to exhaust steam of the pressure p_{2A}; with this is mixed the hot water from the jackets and heaters. Thus in Test 117 the exhaust temperature is 113.5°; of the pound of feed-water, .065 lb. is condensed steam from the jackets, coming supposedly at the full temperature, 316.0°. With water at 113.5°, the heat of formation Q_0 of dry steam at 85.0 lbs. absolute pressure would be 1096.7 B.T.U. Now the jacket-water contains, per pound, $(q_1-q_2)=287.0-81.6=205.4$ B.T.U. above water at 113.5°; therefore the .065 lb. forming a part of each pound of feed-water brings $.065\times205.4=13.3$ B.T.U., which we call q_H. The heat Q_0 is diminished by this q_H, and also by the fraction m of the latent heat, or h, equal to $.02\times891=17.8$; then $Q=1096.7-13.3-17.8=1065.7$. The calculations are all made with the degree of numerical accuracy here indicated, but the last figure is dropped from the larger numbers in the table.

(*h*) TEMPERATURE OF FEED-WATER.—Thus to take the feed-temperature at its maximum attainable value makes the thermodynamic efficiency E_A belong to the engine alone, and not to the plant as a whole. With the very best heating appliances the water supplied to the boiler will be somewhat below the ideal temperature, the heat deficiency per pound ranging from as little as 5 B.T.U. with a non-condensing engine and open feed-heater to at least 15 B.T.U. with a condenser. In the latter case the temperature of the exhaust steam will always be less than that corresponding to the pressure, because this pressure is partly due to the air mixed with the steam; and further, the attainment of nearly the full temperature of the steam in the exhaust-pipe involves the use of a large surface heater, which is rather exceptional.

Instead of using the ideal feed-temperature, which is essentially

Digitized by Google

the same as (t_2+q_H)—numerical, not algebraic sum—we should come nearer to practical conditions by taking the best attainable temperature at from 5 to 20 degrees less, according to conditions. Then the value E_A got with the increased Q as divisor would be the plant-efficiency with the best possible feed-heating system; and any further increase in Q or drop in feed-water temperature would be chargeable to fault in this part of the plant, as distinct from the engine. But since the proper allowance in any case would be rather a matter of guesswork, it has seemed better to adhere to the scheme which has been defined and used.

The actual feed-temperature is lacking in many reports, and very often it was much lower during the test than in normal running on account of special arrangements for measuring the water; there was therefore not enough data to fill a column in the tables, but from the records of a number of good tests the conclusion has been drawn that in a condensing plant, where the supply is taken from the hot-well, the temperature of the water delivered to the feed-pipe is likely to be from 15 to 30 degrees less than the ideal maximum. Just as the condenser-discharge is quite a little cooler than the exhaust steam, so also is the jacket-discharge likely to be cooled by radiation, having somewhere near the same deficiency in heat-content per unit.

(*i*) REGENERATIVE FEED-HEATING.—An essential feature of the pure Rankine cycle is that the reception of heat from the fire by the water begins at the temperature of the engine-exhaust. When the engine has steam-jackets or reheaters the cycle is modified first by the withdrawal of a part of the steam from the working operation; secondly by the entrance into the exhaust of some of the heat from this steam. In other words, the jacket-steam rejects its latent heat into the cylinder-walls, its water-heat above t_2 into the feed-water, and only the heat below t_2 into the exhaust. The underlying idea, of abstracting some heat from the working steam at high temperature (above the exhaust) and returning it to the feed-water with little or no drop, is most fully worked out in the scheme of regenerative feed-heaters; this has been quite fully outlined in § 69 (*h*) and is represented by Tests 365 and 366. The term "regenerative" comes from the analogy to the brickwork

Digitized by Google

chambers in the Siemens furnace, which absorb and store heat from the escaping hot gases, then on the reversal of currents supply this heat to the entering cool gases. Here the heat is not stored, but is taken out of the temperature-lowering phase of the cycle on one side, and put right into the temperature-raising phase on the other side, with the least possible amount of drop.

The two tests just referred to, Nos. 365 and 366, differ from the others in that q_H is not calculated from an observed proportion of the jacket-steam, but is simply the difference in heat-content between feed-water at the actual temperature in the last heater and at the ideal exhaust-temperature t_2. These feed temperatures were 311° and 334.5° in the respective cases.

It must be clearly understood that this system can be advantageously applied only when the engine works under steady conditions, of load especially.

(*j*) PERFORMANCE PER POUND OF STEAM.—The energy-quantities W, w, and W_R are sufficiently explained by the definitions in § 75 (*d*) and the reference in § 73 (*a*). It is here considered most simple and logical to take the pound of steam as the basal unit, as against the rather prevalent practice of calculating heat-quantities per horse-power and per unit of time, or for the whole plant per unit of time.

To make clear the methods used in getting the numbers in the tables, it may be well to work out an example or two.

EXAMPLE 1.—Test 117, already used in Art. (*g*) to illustrate the calculation of Q, has the following leading data:

$$p_{1A} = 85.0,\ p_{2A} = 1.4,\ S_H = 20.7,\ m = .02.$$

To find $W = 2545 \div 20.7 = 123.0$ is very simple.
For w we use Eq. (430),

$$\Delta E \text{ or } w = -m_1 b_1 (t_1 - t_2):$$

from the Steam-tables IV. and XI.,

$$t_1 = 316.0,\ t_2 = 113.5,\ b_1 = 1.149;$$

and by substitution we get

$$w = -.02 \times 1.149 \times 202.5 = -4.65 \text{ B.T.U.}$$

Digitized by Google

To get W_R we interpolate in Table XII. to find E:

Take E at $p_2 = 1.4$, $p_1 = 80$	258.53
Difference from $p_1 = 80$ to $p_1 = 90$ is	7.67
Add 0.5 of this to 258.53, getting	262.37

Combinir ΔE with E we have

$$W_R = 262.4 - 4.7 = 257.7 \text{ B.T.U.}$$

EXAMPLE 2.—In Test 134.2 the fundamental quantities are

$$p_{1A} = 159.5,\ p_{2A} = 0.71,\ S_R = 16.68,\ t_s = 227°.$$

Then $W = 2545 + 16.68 = 152.6$

For w we must now use Eqs. (431) to (433).

From Fig. 685 the specific heat c_1 is taken to be 0.615.

Then the heat added is $h = 0.615 \times 227 = 139.6$ B.T.U.

The upper temperature t_1 being 363° F. or 823° AF., the entropy of superheating is

$$N_s = 2.303 \times 0.615 \log \frac{823 + 227}{823}$$
$$= 2.303 \times 0.615 \times 0.1058$$
$$= 0.1497$$

The rejection-temperature is $T_2 = 91 + 460 = 551$, and the heat rejected is

$$N_s T_2 = 0.150 \times 551 = 82.6 \text{ B.T.U.}$$

Subtracting this from the heat received we have

$$\Delta E \text{ or } w = 139.6 - 82.6 = 57.0 \text{ B.T.U.}$$

To get E from Table XII. we must now use double interpolation: reproducing the necessary part of the table, and inserting the differences, we have

p_2	150	p_1	160	
0.7	332.80	4.12	336.92	$p_2 = 0.71$
	6.22		6.19	$p_1 = 159.5$
0.8	326.58	4.15	330.73	

Digitized by Google

Start with the smallest number	326.58
0.71 is 0.9 of the way from 0.8 to 0.7, therefore add 0.9×6.20	5.58
159.5 is 0.95 of the way from 150 to 160 therefore add 0.95×4.12	3.92
The value sought is	336.08

To this 336.1 add 57.0, getting 393.1 for W_R.

Note.—The examples are worked out largely with the slide-rule, so that the numbers may not be precise to the last figure.

(*k*) THE UNIT OF STEAM-QUANTITY.—With the idea of bringing the results of different engine-tests to a better condition for comparison, many engineers have adopted the scheme of reducing actual steam-consumption to equivalent dry steam, somewhat as in a boiler-test the evaporation is always reduced to equivalent steam from and at 212°. The idea is, properly, to replace the actual steam (wet or superheated) by an amount of dry-saturated steam which will have the same heat-content: and the question at once arises, Above what starting-point shall the steam-heat be measured? For engine-efficiency pure and simple, as in our tables, the initial state would be that of the ideal feed-water; for the plant efficiency, the actual feed-temperature must be used; and with different starting-points the reduction factor will be different. On account of this last consideration, the writer has preferred to give the actual weight of steam in every case, and to incorporate its quality into the calculation of the thermal quantities per pound. The occasional practice of simply subtracting moisture from total steam and calling the remainder the dry steam consumed by the engine is inexcusable.

(*l*) ABSOLUTE EFFICIENCY.—This quantity, the ratio of work got out to heat put in ($E_A = W \div Q$), is the primary measure of the economy of the engine. Summarizing what is shown by the tables, but without stopping at this point to study conditions, we make the following generalization:

Digitized by Google

TYPE OF ENGINE	EFFICIENCY
Simple engines, Table A	.07 to .13
Small high-speed, Nos. 211 to 216	.09 to .13
Compound locomotives, Nos. 201 to 204	.11 to .13
Large high-speed engines, Nos. 224 to 228, 234 to 244	.14 to .18
Compound Corliss-type engines with saturated steam and with moderate superheat, Nos. 251 to 257, 259, 281 to 285	.15 to .19
Modern high-superheat compounds, Nos. 291, 292	.20 to .21
High-ratio compounds and triples, Nos. 271 to 274, 301 to 316	.18 to .20
High-grade pumping engines, Nos. 333 to 358	.18 to .22
Good average marine engines	.15 to .17

The record is held by the regenerative-heater engines, Nos. 365 and 366.

(*m*) LIMIT OF PLANT-EFFICIENCY.—Before going into a close examination of realized performance, it may be well to emphasize and illustrate the fact that the engine-efficiency as here expressed is the upper limit of the steam-efficiency of the whole plant. If we were to make the allowance of 15 to 30 B.T.U. called for in Art. (*h*), Q would be increased by from 1.5 to 3 per cent. and E_1 diminished by from one-sixtieth to one-thirtieth of its value as tabulated, and the result would be the efficiency of the whole plant if no additional steam were used by auxiliaries.

When the essential pumps—condenser-pump, feed-pump, and any special contrivances for returning the jacket-water—are all driven by the main engine itself, there will be no additional steam consumption, but the effective power of the engine will be diminished by two or three per cent. Practically, the direct-driven system is advantageous only when the load is very steady, as in pumping plants.

The generally better, in fact the ideal, scheme is to use the exhaust steam from separate pumps to heat the feed-water.

Digitized by Google

the latter is taken from the hot-well, and if the exhaust can all be condensed (in an open or mixing heater, and without raising the water up to 212°), we have that all the heat coming from the boiler in this steam is returned, except the small amount spent in the effective work of the pumps. Provided only that there is enough margin in water-temperatures for this complete condensation (or not too much exhaust), we have a case where the power developed in the auxiliaries costs practically nothing: or, as a different form of statement, the auxiliary plant is now working at unit efficiency, because none of its rejected heat is wasted. With this simple circulation of heat—from the boiler, then nearly all back again—the auxiliaries have practically no influence upon the efficiency of the plant, which is determined wholly by the main engine. This arrangement is closely analogous to the working of an injector in boiler-feeding: but when we include condenser-pump as well as feed-pump, not quite all the energy goes back into the boiler.

If the steam from the pumps is wasted, as when these exhaust into the condenser, the ratio of steam to effective output is increased for the plant as a whole. Auxiliaries developing from 2 to 5 per cent. of the power of the main engine may easily use from 5 to 15 per cent. of the total steam. The larger values are for small plants with pumps in bad condition; and so great a proportion of steam could not all be utilized in feed-heating according to the scheme just described.

When it is impossible to heat the feed-water, as in a locomotive, the plant-efficiency is bound to be much lower than that of the engine alone.

(*n*) Relative Efficiency.—This is the most important criterion of engine-performance, since it takes account of the main determining conditions under which the thermodynamic operation is carried out, and shows how much margin there is between actual efficiency and the ideal maximum. It is by studying their effect upon this ratio that we can most intelligently estimate the value of the various schemes and expedients used to reduce the wastes in the engine. And it is, further, a very effective check upon over-high claims as to the results got in certain tests.

In the tables we see values ranging all the way from 0.35 (No.

Digitized by Google

331) to 0.85 (No. 115). Considering the general run of results, we may divide this range as follows:

Rather poor performance	0.40 to 0.50
Fairly good	0.50 to 0.60
Very good	0.60 to 0.70
Exceptional	above 0.70

This applies to engines working at or near the most economical load; with heavy overloads, and especially with very light loads, there will be a great falling off in efficiency, and the range below 0.40 will be invaded. Far down in this range are the small steam-pumps, which may use as much as 100 to 200 lbs. of steam per horse-power-hour. Of certain remarkably high results, such as those in tests Nos. 113, 115, 152, 224, 227, and 284, we can only say that they are too good to be true; while some others, like Nos. 172, 304, and perhaps 344, are on the border-line of credibility.

In Tests 365 and 366 the basis of comparison is not the same as for the other engines. Here the actual efficiency E_A is divided by the Carnot-cycle efficiency $(T_1 - T_2)/T_1$, printed in the space under w and W_R. The writer is inclined to believe that the remarkable efficiencies shown in Test 366 are not to be fully accepted without further confirmation, as by the tests of this or similar engines.

§ 77. Discussion of Engine Tests.

(*a*) EFFECTS OF SIZE AND SPEED.—While it is entirely true that increase in size and in speed both make for a reduction of thermal losses, it is not easy to show a gradation in E according to these influences, because this requires a comparison of different engines with many elements of variation—such a comparison being far less clear and satisfactory than those that can be made when a single element is varied in the working of the same engine. The effect of size is perhaps best shown in the group of compound Corliss engines in the first half of Table C. A conspicuous advantage of large size is that it renders unnecessary special contrivances for obviating thermal losses, such as the steam-jacket, and thereby greatly simplifies and cheapens the engine.

Digitized by Google

The bad effect of very low speed, even when coupled with great size of cylinder, is strikingly shown by Fig. 686, which is of interest as one of the classic examples that first brought home to the minds of engineers and scientists the fact and the importance of cylinder-condensation. These diagrams are here all laid out to represent the performance of one pound of steam, with the same scales that are used in § 69, and with the constant-weight curve for the pound drawn in full line. The initial condensation is more than 50 per cent. for the earliest cut-off (at about one-eighth of the stroke); and we have here an unusually clear case of condensation continuing past cut-off, as indicated by the drop of the expansion-curve below

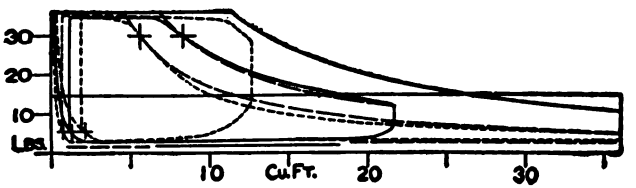

FIG. 686.—Diagrams from Isherwood's Tests of S.S. *Michigan*, Test 101.

the hyperbola. In showing an excessive thermal interaction these tests helped to make clear the fallacy of the early view that it was profitable to carry out a very high rate of expansion in a single cylinder, thus hastening the advent of the compound engine.

The most striking case of variation in the speed of an engine under test is seen in No. 141: while a very clear example of the effect of speed-change is given in the first four tests of the simple locomotive, No. 181, where E_R rises steadily with the speed. In the compounds, Nos. 201 to 204, gain along this line is neutralized by increasing pressure-losses. The last test of No. 181 was made with the steam throttled, hence the lower efficiency there shown.

(*b*) PRESSURE-RANGE.—A very important fact that becomes evident by a study of the E_R column of Tables A and B is that the non-condensing engines develop a much larger proportion of their ideally possible performance than do those with vacuum exhaust—the difference being greater with simple than with compound engines. This is partly due to a greater cylinder-condensation on

Digitized by Google

account of larger temperature-ranges; but the chief reason is that it does not pay to make the cylinder big enough for the full utilization of the large specific volumes of steam at very low pressure. Very considerable "incompleteness of expansion" is to be seen in Figs. 597 to 608, and in the lower-ratio engines of Tables A and B this effect is much more marked. Not only is it commercially inadvisable to make the (low-pressure) cylinder so very large, but the purely technical efficiency would be but little increased, because the frictional resistance will become too great relative to the low effective steam-pressure.

The fact that a change in the exhaust-pressure has only a small influence upon the total efficiency E_A of the engine (as compared with its effect upon the ideal output W_R) is one reason why, in a great many of the earlier tests, less than the desirable attention has been paid to the accurate measurement of p_2; and it also accounts for some rather erratic variations in E_R. Perhaps the most essential difference between the steam-turbine and the engine, as regards the steam-action in its total effect, is found in the fact that the turbine can take very full advantage of the low-pressure range, which is not equal to the engine at high-pressure. This makes the production of good vacuum very important in the turbine plant, and incidentally leads to a careful measurement of its amount.

(*c*) VARIATION OF EFFICIENCY WITH LOAD.—The determination of this relation is one of the most important results of an engine test; but to save space we have not given any series runs in the tables, preferring to illustrate this part of the subject by plotted curves. The first example, Fig. 687, accompanies Fig. 686. In this marine engine the speed varies with the power, but rather irregularly as shown by the curve marked N. To get a smoother basis for the curves, the I.H.P. measured as abscissa is not the true power, but that which would be developed with the actual M.E.P. and at the average (and uniform) speed of 15 R.P.M. Then the ratio of expansion r varies as plotted. The most important curve is that of the steam-consumption, S_H (pounds per indicated horse-power-hour). The shape of this curve is characteristic, S_H rising with overload on account of incomplete expansion and with underload because of great thermal losses.

Digitized by Google

Typical curves covering a wider range of load are given in Fig. 688. The total-steam curve S (pounds per hour) is quite often plotted, since it gives rather a better idea of the performance at very light loads. If S_H were constant, S would follow a straight line towards the origin O. The point of tangency of the line OA with the curve of S corresponds with the minimum value of S_H. It is of interest to see how much (or how little) S rises above AO as the load falls off, since this is a criterion of the ability of the engine to carry a light load economically.

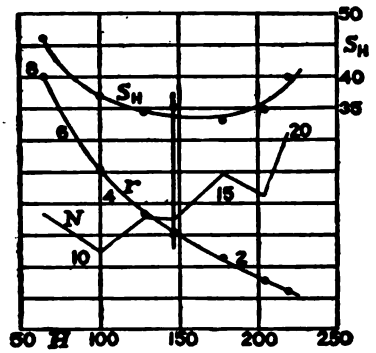

FIG. 687.—Curves for Tests of S.S. *Michigan*. Test 101. B. F. Isherwood, 1861.

$p_{1A} = 36$, $p_{2A} = 2.1$, $N = 15$.

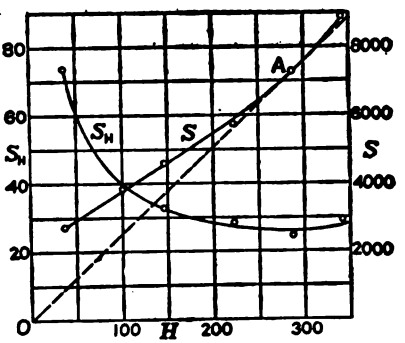

FIG. 688. — Simple Non-condensing Corliss Engine, 16×42. G. H. Barrus, 1893, E. R., July 22, '93–124.

$p_{1A} = 112$, $p_{2A} = 14.7$, $N = 86.5$.

A very instructive lot of results are plotted in Fig. 689, of great interest as showing the effect of different degrees of compounding; marking the curve N and J distinguishes non-jacketed and jacketed operation. The principal curves show steam-consumption, of course, and we see how the best-load value of S_H is diminished by increasing the expansion; if the steam-pressure had been proportionately raised, the compound and triple would show up even better. Under neither of these latter conditions is the engine carried beyond what should be considered its rated load. Note how long is the range of power over which both compound and triple curves are nearly horizontal. The curves marked E show mechanical efficiency, and will receive comment in Art. (*f*).

Digitized by Google

Fig. 690 shows the working of a number of good engines. The noticeable thing about I. is the flatness of the S_H curve, or the way that S points right toward the axis. The same rather unexpected variation is strongly shown in IV.; and the engine of Test 236 (not here plotted) worked in the same manner. The kind of curves in II. (similar to Fig. 688) is what is generally considered to be characteristic of the engine, and too little curvature throws doubt upon the light-load measurements. A plausible explanation is this:

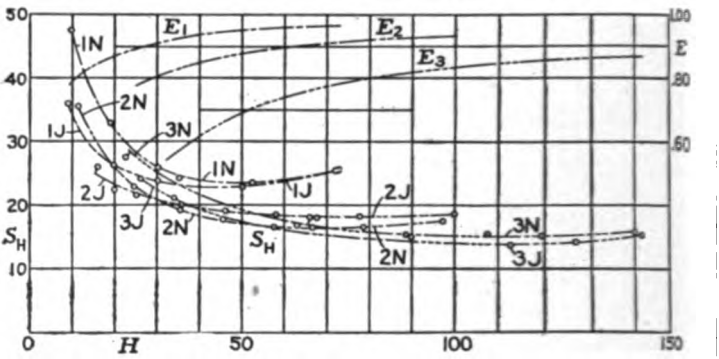

FIG. 689.—Tests of Experimental Corliss Engines at Sibley College, Cornell University—in Tables, Tests 112, 251, 301.

1 Simple	9	× 36	$p_{IA} = 115$	$N = 87$, Condensing
2 Compound	9, 16	× 36	$p_{IA} = 120$	
3 Triple	9, 16, 24	× 36	$p_{IA} = 130$	

When a compound engine has been running under a certain load and is then suddenly changed to a lighter load, the influence of the former condition persists for quite a while, the stored heat in the metal seeming to exert an influence entirely out of proportion to its actual amount. The three tests just referred to are all short-time, surface-condenser tests; so that we may very properly question the reliability of the light-load determinations without reflecting upon the experimenters. The peculiar action just described was quite strongly brought out in the discussion, before the Am. Soc. M. E., of the tests plotted in Fig. 689.

The curves numbered III. on Fig. 690 show exceptionally good results for so small an engine with saturated steam. In this engine

Digitized by Google

e ideas of reducing the surface-area of the clearance-spaces and steam-jacketing all surfaces as far as possible are very fully ried out. The piston takes the form of two disks, so far apart the rod that the space between them always remains in com- unication with a port which opens through the cylinder-wall from e jacket-space.

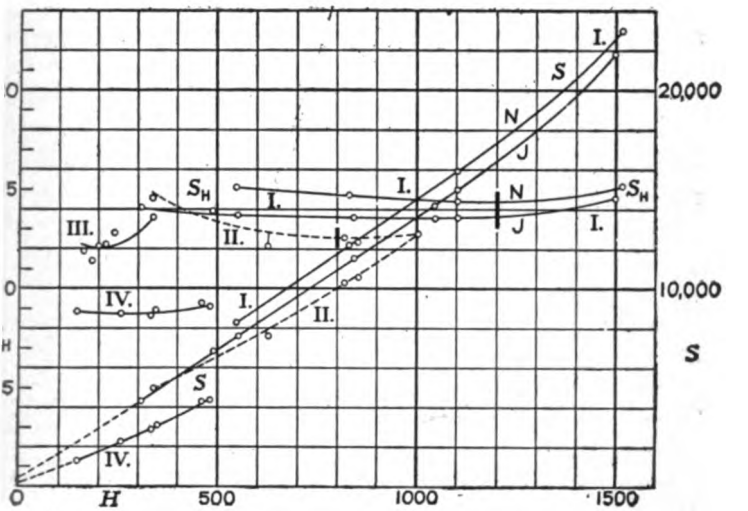

FIG. 690.—Tests of Compound Condensing Engines.
Vertical McIntosh & Seymour, 23, 48×48; see Fig. 602.
$p_{iA} = 168$, $N = 102$. L. S. Marks, A. S. M. E., 25–443.
Horizontal Corliss Engine, 20, 40×42; Test 257.
$p_{iA} = 165$, $N = 121$. I., II., Black lines show rated power.
Cockerill-Francois Double-piston Engine, 14.8, 25.6×29.5.
$p_{iA} = 150$, $N = 121$. H. Hubert, 1904. ENG. 1905, II. 56
Vertical High-superheat Engine, 21, 36×36; Test 292.
$p_{iA} = 132$, $N = 101$. $t_s = 380$ to 400°.

The performance of a couple of very large generator engines is forth in Fig. 691. The results are left in the terms in which they e measured, S_K being pounds of steam per kilowatt-hour. Since ıcludes both mechanical and electrical losses, increasing in rela- amount at light loads, the curve of S_K should rise much more idly toward the left than would the curve of S_H. The curves

Digitized by Google

marked A and B for engine II. show the effect of changing the manner of variation of the receiver-pressure, or of the division of work between the cylinders. When running out into the overload region, raising the receiver-pressure will chiefly act to diminish loss by receiver-drop, and this accounts for the better performance in case B. As on the last figure, the short heavy vertical lines mark rated load.

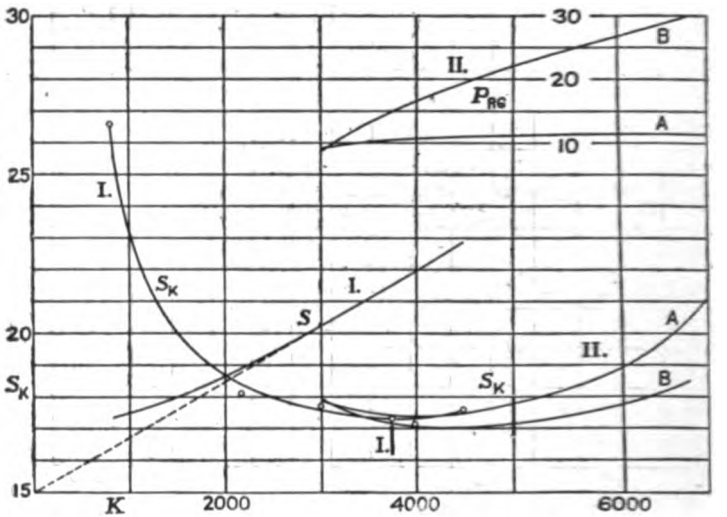

FIG. 691.—Very Large Compound Corliss Engines.

I. Three-cylinder Vertical, 44, 75.6–75.6×60; Test 271.
New York Edison Co., Waterside Station; Westinghouse Mach. Co.

II. Horizontal-vertical Duplex, 42, 86×60; Test 259.
Interborough (Subway) Power House, New York; Allis-Chalmers Co.

(*d*) EFFECT OF JACKETS AND HEATERS.—The evidence of the tabulated tests as to the degree of economy produced by these devices is decidedly variant. A summary is set forth in Table 77 A where all the cases of experiment upon the same engine with and without jackets are collected and compared. Under N and J is given the steam-consumption per horse-power-hour, S_H, for the respective cases, while under "Gain" is the difference (N–J) expressed as a percentage of N: a plus value means saving by the

Digitized by Google

TABLE 77 A. EFFECT OF JACKETS AND HEATERS.

No.	N	J	Gain	No.	N	J	Gain
104	26.3	23.2	+12.7%	258	11.6	11.2	+3.6%
112	23.5	22.9	+ 2.5	271	12.1	12.7	−4.6
118	19.8	19.3	+ 2.5	274	11.3	11.5	−1.7
119	24.7	19.3	+21.9	301	15.3	13.9	+8.9
216 A	23.8	23.1	+ 2.9	304	10.4	10.4	−0.2
216 C	20.0	19.6	+ 1.7	332	16.9	16.6	+2.1
233	16.9	17.1	− 1.0	342	14.3	13.8	+3.0
243	14.4	13.6	+ 5.8	351	14.1	13.8	+1.8
251	16.5	18.0	− 9.1	371	23.2	21.3	+8.4
252	19.3	20.4	− 5.8				

jackets, a minus value, loss. The more recent tests, on larger and better engines, show but small differences. In this connection it will be well to review the statements made under Fig. 601.

An essential and quite important characteristic of jacket-action is well brought out by the curves in Fig. 689. At full load, the use or non-use of the jackets is largely a matter of indifference; but under light load, where the influences tending to cause cylinder-condensation are stronger, the jacket makes decidedly for economy. This leads us to the conclusion, which has been crystallized from general experience, that when, on account of small size of cylinder, low speed, early cut-off, or a big temperature-range, the cylinder-walls tend to be very active thermally, the jacket will be valuable; but under the contrary condition the jacket is less useful, and may even waste more steam than it saves. Fig. 689 gives further a conspicuous example of the contradictory evidence to be met with along this line: running simple or triple there is better performance with jackets and reheaters, running compound, without them—and there is no apparent reason for the difference.

The function of a reheater in the receiver is to furnish dry steam to the lower cylinder, and thereby diminish the tendency to initial condensation. This involves the re-evaporation of the moisture due to work done in the preceding stage, and unless there is ample heating-surface the re-evaporation may be incomplete, and so very little be gained. A thoroughly sound view of the principles involved is embodied in the scheme, applied in some of the best engines, of passing exhaust from the higher cylinder through a sepa-

Digitized by Google

rator, thus removing most of the water mechanically, and then drying and even superheating the steam before it goes to the next cylinder. Using boiler-steam to evaporate water which at best can then work through only a part of the full temperature-range is not economical.

An incidental advantage of all these steam-heating devices is the return of some heat to the boiler, discussed in § 76 (*g*). If the plant is so arranged that this hot water is not or cannot be added to the boiler-feed, an unnecessary loss is incurred.

(*e*) SUPERHEATING.—In order to form a proper judgment of the economic value of superheating, we must go beyond the mere decrease in steam-consumption, and consider the thermal efficiency, both absolute and relative. In applying this criterion, we must remember that if the engine can maintain E_R undiminished as superheat is added, there will be some gain in E_A, because the ideal performance is better when a part of the heat is received at temperatures above the boiling-point; if E_R increases, there will be yet more advantage gained.

The few tests which offer a chance for direct comparison are gathered together in Table 77 B, where values of E_A are given under T and P for saturated and for superheated steam, and "Gain" is the percentage of P over T. Other tests, notably Nos. 221, 222, 224–228, 244, 292, and 304, show excellent performance by engines with superheated steam, but there are no cases with saturated steam which are in other respects enough like these for a numerical comparison.

TABLE 77 B. EFFECT OF SUPERHEATING.

No.	t_s	T	P	Gain	No.	t_s	T	P	Gain
102	96	.078	.086	+10.3%	282	129	.155	.176	+12.3
134	227	.136	.122	−10.3	291	375	.171	.201	+17.6
171	231	.064	.115	+79.8	314	230	.188	.206	+ 9.6
201–4	93	.122	.134	+10.*	316	213	.196	.213	+ 8.7

In only one case, No. 134, is there a lower efficiency with superheat; while the greatest gain is, naturally, found in the small simple

* Here the seven tests under Nos. 201 to 203 are averaged, also the three under 204, and the means are compared.

Digitized by Google

engine like Nos. 171 and 172, where superheating is the only influence toward economy. The tests on larger engines appear to show an advantage of from 10 to 15 per cent. How great is the commercial value of this thermal gain is a question that is determined chiefly outside of the engine itself. The engine for superheated steam is likely to be the simpler in construction, since there is no logical place for the steam-jacket; the only expedient along this line is a reheater through the tubes of which the whole steam-supply is passed on its way to the first cylinder. The weakest point in a plant of this type will be the superheating surface, which is under much more trying conditions than that used for evaporation; it is therefore liable to rapid deterioration, and will have to be renewed at comparatively short intervals. And where a separately-fired superheater is used, there will be a larger proportional waste of fuel in banking fires than with the larger grates of the boiler proper.

In this latter connection, we may differentiate moderate superheating, up to say 150° F, which can be carried out in an apparatus forming a part of the heating-system of the boiler, and high superheat, up to 300° F., which requires a separate apparatus with its own fire. To put the superheater at a point in the hot-gas circulation of the boiler where the gases will be hot enough to raise steam 200° to 300° above the boiling-point will render these tubes liable to dangerous overheating if the boiler is pushed hard—although a good deal can be done to overcome this difficulty by using special dampers to divide the hot-gas current so that only a portion will pass through the superheater.

Taking account of extra cost of plant, both initial and for maintenance, it does not appear that the use of superheat offers much advantage over a well-designed engine with saturated steam.

(*f*) MECHANICAL EFFICIENCY.—In connection with the data presented in Tables 75 F and G, it will be well to refer to the general discussion in § 39. The brake horse-power, or the effective output of the engine alone, is given only in the "Power Engine" group of Table G, where we see normal-load values ranging from 0.82 to 0.96. A most instructive lot of results is partly tabulated in Nos. 112, 251, and 301, and more fully plotted in the efficiency curves

Digitized by Google

on Fig. 689. These data from the Sibley College engine show first of all how greater complexity of the machine increases the frictional loss, although the disproportionate increase due to the low-pressure section seems to indicate some local imperfection; another point of great interest is the small change in the friction power, under "Diff.", with variation of the load in any particular condition of operation.

The locomotive tests in Table G were all made with the dynamometer right back of the locomotive, instead of its being behind the tender as is unavoidable in a road test; the engine-friction is then increased only by the effect of the weight carried on the axles.

With the pumping-engine, the scheme generally used is to measure the pressure in the suction-pipe and in the discharge-pipe, near the pump; to these is added the pressure due to the vertical "head" between the gages, and the result is the resistance against which the plunger works, and is used as the M.E.P. in calculating the pump horse-power. By this method the work of overcoming the water-friction is not included in the effective output of the pumping-engine, or this work is added to the machine-friction. Considering the further fact that in many cases the feed and condenser pumps are directly driven and their power-consumption included under "Diff.", we see that the large vertical pumping-engine is a remarkably efficient machine. The high mechanical performance in Nos. 331 to 337 would naturally be expected from engines of the Worthington type. The low efficiency in No. 354 is due to the fact that the power developed by two of the cylinders has to be transmitted through the crank-shaft, to help drive the one pump-plunger, which is tandem with the third cylinder.

The tests of combined engine and generator units in Table G indicate quite good engine efficiencies. The exceptional values in No. 271 can only be accounted for by the assumption that the indicator-measurements were not quite correct. And it may be remarked that too high thermal efficiency in Test 152 joins with the abnormally low mechanical efficiency to suggest a similar unreliability of the indicated power.

Digitized by Google

§ 78. Discussion of Turbine Tests.

(*a*) General Considerations.—In the compilation of Table 75 E, the aim has been to select good representative tests of the various types of turbines. In some cases, very little information is available beyond what is here directly represented; but for the more prominent types selection has been made from a large mass of data, the fuller presentation of which would only confirm the results here given. The general uniformity in kind of service and in working conditions produces a correspondingly small variation in the performance of turbines of any particular type.

Where a large series of tests has been reported from the works of the builders, those in charge of outside experts have been preferred. Of the references to Stodola, several are original, the others are thus given as most likely to be accessible to the reader. Much information along this line will be found in *Steam Turbine Engineering*, by Stevens and Hobart.

The computed values in this table are largely dependent upon the ideal steam per indicated horse-power-hour, S_H: this is based upon assumed mechanical and electrical efficiencies, as noted in § 75 (*e*), which are taken at what seem to be good probable values in order to make the thermodynamic results comparable with those of engine tests. Comparing Table E with F and G, we see that, as is reasonable, the turbine has been credited with higher mechanical efficiency than the engine: it was not intended that the rotation-losses—see § 73 (*m*)—should be included in the assumed E_M, but that they should rather be considered a part of the thermal waste. Then by so much as the turbine is considered more efficient mechanically when deriving S_H, by that much is a comparison based on E_A or E_R unduly favorable to the engine. Work delivered to the rotor per pound of steam is here emphasized rather than effective output: for the latter point of view a direct comparison of actual steam-consumption as given in Tables E and F, with due regard to variant conditions, is all that is required.

(*b*) *Single-stage Turbines.*—Of the De Laval tests, No. 401 is rather a special experiment, intended to prove the availability of very high superheat. The steam-consumption S_B for No. 402 is

Digitized by Google

[illegible]

Fig. 662.—De Laval Turbine [illegible] Fig. 663.—De Laval Turbine [illegible]

[illegible] performance with saturated steam. [illegible] with superheat. [illegible] again the numbers at the points on the S_R curve show how many nozzles were open. The efficiencies are very good for a [illegible] very small unit.

The special single-stage Kerlen-Stumpf turbine, No. [illegible] has already been described in § [illegible].

(c) Multi-stage [illegible] Turbines.—To represent the next group in the table, the Rateau and Zoelly turbines, Figs. 664 and 665 are plotted. The first shows characteristic curves for the steam turbine in general, that of S_R continually descending as the load increases, out to an overload which will require the by-pass valve (as on Fig. 620) at B, to be opened: if this is done, the curve will show a hump.

Fig. 665 represents the low-pressure turbine which is run on the exhaust from non-condensing engines: here the limiting pressures, below the control-valve and at exhaust, [illegible] plotted. In Test 413, where a decided superheat is sh[illegible] evident that the

turbine was run, not with exhaust steam through a Rateau "accumulator", but with steam reduced in pressure by throttling. Confirming what has been said in § 77 (*b*), these tests show a

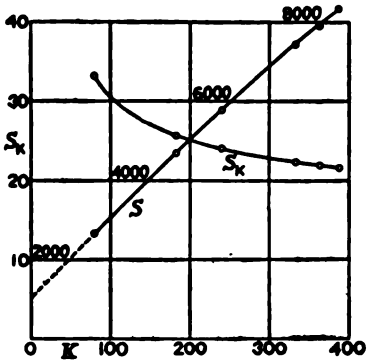

FIG. 694.—Zoelly Turbine, rated 500 H.P., Test 421.

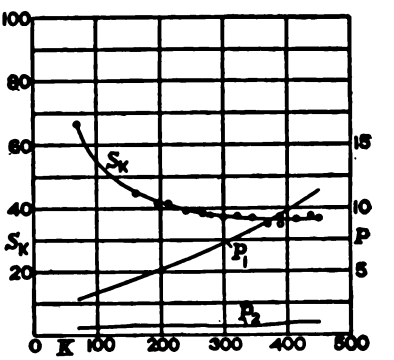

FIG. 695.—Low-pressure Rateau Turbine, rated 700 H.P., Test 414.

high efficiency in the utilization of the low pressure-range. The very reasonable suggestion has been made that a plant composed of high-pressure engines and low-pressure turbines would be more efficient than one with either type of prime-mover alone.

(*d*) THE CURTIS TURBINE.—Of this group of tests, No. 441 is plotted in Fig. 696 because it covers a wide range of load. Both saturated and superheated steam was used, the curves being marked T and P for these two cases; and along the S_K curve for superheated steam the degrees of superheat are marked. It will be noted that Test 441.2, with $t_s = 290°$, is not shown on Fig. 696. The relative efficiency keeps remarkably close to 60 per cent. for the whole group, taking an upward jump only at No. 445.

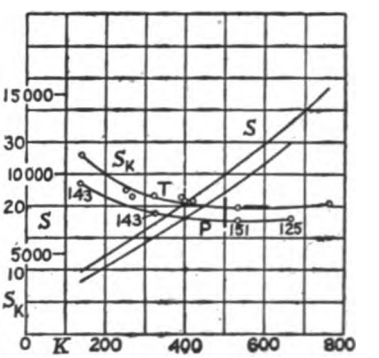

FIG. 696.—Curtis Turbine, rated 500 Kw., Test 441.

The tests from small Elektra turbines, No. 431, give rather low

Digitized by Google

[illegible] from both the size and the design. [illegible] from a single-stage turbine, the second from a [illegible] turbine with both stages in use, the third from the [illegible] the first stage working.

[illegible] TURBINE.—A large number of tests of the Westinghouse-Parsons turbine are given in the paper of Mr. Hodgkinson [illegible] in 1904, from which Nos. 451 and [illegible] Nos. 452 is chosen for illustration [illegible] beyond the rated power marked [illegible] opening of the bypass [illegible] at the right.

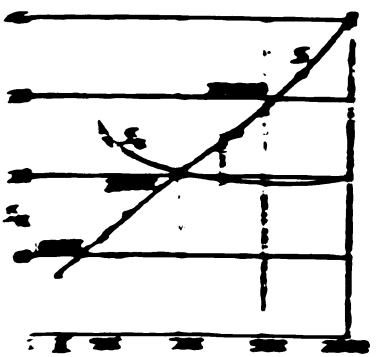

FIG. [illegible].—Westinghouse-Parsons Turbine, Test 452.

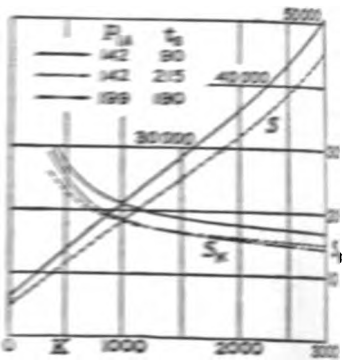

FIG. 698.—Brown-Boveri-Parsons Turbine, Test 451.

The best published performance by a Parsons turbine is that [illegible] Test [illegible] and [illegible] in Fig. 698. Curves are drawn for different [illegible] of pressure and superheat, as marked on the figure.

[illegible] the last two tests in the Table, it may be said that the [illegible] turbine is too small for high efficiency, while the other shows [illegible] well enough for the first of the type.

[illegible] EFFECT OF VACUUM.—It is generally shown by tests [illegible] there is a steady gain in economy of steam with increasing vacuum. The examples in Table 75 E which offer a chance for fair comparison are collected in Table 78 A: Tests 442 and 443, at first sight making up another effective pair, have really too many elements of variation—in superheat and in desi[illegible] working parts [illegible]

well as in vacuum. Differences in initial pressure must be considered in Nos. 409 and 411, so that a direct comparison of steam-consumptions cannot well be made.

TABLE 78 A. EFFECT OF VACUUM.

No.	p_{1A}	p_{2A}	$S_{B,K}$	t_2	E_A	E_R
409.1	203	2.14	13.7 B	129	.156	.554
2	185	1.22	12.3	109	.171	.580
411.3	224	2.15	22.1 K	129	.144	.561
2	169	1.64	22.6	119	.143	.567
451.1	170	1.46	14.4 B	115	.166	.604
2	169	0.99	13.9	102	.170	.588
452.1	162	1.42	19.5 K	114	.171	.624
3	161	0.94	18.8	100	.175	.610
452.2	161	1.42	18.5 K	114	.173	.627
4	161	0.93	17.6	100	.179	.617

One thing made clear by even these few tests is that an advantage in steam used does not represent an equal gain in thermal performance: t_2 is given to show how rapidly the ideal feed-temperature falls with the vacuum; and the effect of the resulting increase in the steam-heat Q is seen in the smaller relative difference between the values of E_A than between those of S_B or S_K. The production of extra good vacuum requires a very considerable increase in the condenser-equipment, which means that there will be more exhaust from the auxiliaries for heating the feed-water; but this extra steam helps to neutralize a gain in the main apparatus. It is safe to say that while the turbine can utilize low exhaust-pressure much better than can the engine, there is yet a limit below which it is not practically or commercially profitable to carry the reduction; and with some machines the limit may be higher than has been thought. In the last three examples of Table 78 A the falling off in E_R with decrease of p_2 suggests that this limit may have been passed.

This brings us to the point that ability to utilize fully the lower

Digitized by Google

part of the pressure-range is partly a matter of the design and proportioning of the turbine; the last stages must be made big enough in sectional area of steam-channel and in size of vane, just as a multiple-expansion engine must have a very large L.P. cylinder to get the benefit of full expansion. An incidental advantage of the turbine is the rapid decrease of the steam-friction as the pressure is lowered—apparently the chief source of gain in the big single-disk turbine of No. 409—while in the engine internal friction relatively increases as the last cylinder is made larger. In both machines the low-pressure portion will act merely as a drag at light loads, but here again it seems that the advantage will lie with the turbine.

(*g*) EFFECT OF SUPERHEAT.—A number of comparisons of tests which were essentially the same except for the absence or presence of superheat are made in Table 78 B, all the examples being taken from Table 75 E. In terms of steam-consumption there is evident a decided saving; but when we transform to thermal economy the gain is much less. A small improvement in relative efficiency is

TABLE 78 B. EFFECT OF SUPERHEAT.

No.	p_{1A}	p_{2A}	t_B	$S_{B,K}$	E_A	E_B
401.1	99	14.5		39.5 B	.068	.492
3	99	14.6	604	25.7	.079	.517
404.1	221	1.67		15.5 B	.158	.555
3	222	1.47	84	13.9	.164	.562
421.1	159	1.03	7	21.5 K	.157	.549
3	160	0.99	77	19.8	.163	.563
441.1	165	1.0		19.8 K	.172	.600
2	165	1.0	290	15.9	.185	.608
451.2	169	0.99		13.9 B	.170	.588
3	165	0.98	104	12.5	.179	.612
4	168	0.93	180	11.5	.187	.627
452.1	162	1.42		19.5 K	.171	.624
2	161	1.42	76	18.5	.173	.627
452.3	161	0.94		18.8 K	.175	.610
4	161	0.93	78	17.6	.179	.617

Digitized by Google

shown in every case, but the gain in absolute efficiency is not large enough to justify some of the rather high claims which have been made. That superheat is of more value in the turbine than in the engine is not substantiated by these tests, although the difficulties in the way of applying it are less than where there are valves and pistons. It is claimed further that steam-friction is diminished by superheating, and that the wear on vanes is less than with wet steam, and these advantages are decidedly useful.

A general review of the test tables, comparing steam-turbines with engines of good design, will show that the turbine has not yet quite come up to the engine in heat-economy. The one field in which the turbine has shown marked superiority is that of ship-propulsion. A close determination of the power of a marine turbine is impossible; but it appears to keep well up with the stationary turbine in economy, while the marine engine is far behind the best land engines.

Digitized by Google

Digitized by Google

APPENDIX.

TABLES FOR REFERENCE.

TABLE XI.

SUPPLEMENT TO STEAM-TABLE.

THIS table covers very closely the range of pressure below atmosphere, furnishing conveniently and accurately numerical quantities which are of importance in the calculation of ideal steam-performance. The symbols are the same as in §§ 9 and 13 and in Table IV., namely:

p = absolute pressure, pounds per square inch;
t = steam temperature or boiling-point, degrees Fahrenheit;
q = heat of liquid, above 32° F.;
H = total heat of steam, above 32° F.;
s = specific volume, cubic feet per pound of steam;
a = entropy of water-heating
b = entropy of evaporation
} see § 13 (*c*).

The volume s is calculated by means of the formula $ps^{1.065} = 483$ —Eq. (61), § 10 (*i*)—and will be found not quite to agree with the values given in the first part of Table IV.

TABLE XII.

PERFORMANCE OF THE RANKINE CYCLE WITH SATURATED STEAM.

The numbers in the body of the table give the output in B.T.U. from one pound of steam, when the cycle operates between the upper pressure p_1 at the top of the table and the lower or exhaust pressure p_2 at the side—both pressures being absolute and expressed in pounds per square inch. For the use of this quantity refer to § 73(*a*), § 75 (*d*), and § 76 (*j*). It is the same thing as AU' in Tables 16 A and B and E in Table 24 A and Table V.

To save the trouble of referring to the Steam-tables, values of the total heat H_1 and of the feed-water heat q_2 are here given, so that the heat received per pound of steam, which is

$$Q = H_1 - q_2,$$

can be easily obtained for any conditions. The ideal absolute efficiency is $E \div Q$.

Digitized by Google

TABLE XI. PROPERTIES OF SATURATED STEAM

p	t	q	H	r	s	v	h
0.1	34.97	2.97	1092.60	1089.67	2878	.00602	2.2014
0.2	53.30	21.31	1098.20	1076.90	1501	.04239	2.0980
0.3	64.70	32.72	1101.67	1068.96	1026	.06438	2.0378
0.4	73.11	41.14	1104.24	1063.10	783	.08030	1.9939
0.5	79.83	47.87	1106.29	1058.43	635	.09284	1.9606
0.6	85.48	53.52	1108.01	1054.49	535	.10325	1.9331
0.7	90.35	58.40	1109.50	1051.10	463	.11218	1.9099
0.8	94.64	62.70	1110.81	1048.10	408.5	.11996	1.8897
0.9	98.50	66.57	1111.98	1045.41	365.7	.12692	1.8719
1.0	102.00	70.09	1113.05	1042.96	331.2	.13318	1.8558
1.1	105.20	73.29	1114.03	1040.74	302.9	.13888	1.8412
1.2	108.16	76.26	1114.93	1038.67	279.1	.14412	1.8280
1.3	110.92	79.03	1115.77	1036.74	258.9	.14898	1.8159
1.4	113.50	81.62	1116.57	1034.95	241.5	.15351	1.8048
1.5	115.92	84.05	1117.30	1033.25	226.4	.15773	1.7946
1.6	118.20	86.34	1117.99	1031.65	213.1	.16170	1.7849
1.7	120.37	88.52	1118.65	1030.13	201.3	.16547	1.7759
1.8	122.43	90.59	1119.28	1028.69	190.7	.16902	1.7673
1.9	124.40	92.56	1119.88	1027.32	181.3	.17241	1.7591
2.0	126.28	94.45	1120.46	1026.00	172.8	.17564	1.7513
2.1	128.08	96.26	1121.00	1024.74	165.0	.17872	1.7438
2.2	129.81	98.00	1121.53	1023.53	158.0	.18167	1.7367
2.3	131.47	99.67	1122.04	1022.37	151.5	.18449	1.7298
2.4	133.07	101.28	1122.53	1021.25	145.6	.18720	1.7232
2.5	134.61	102.83	1123.00	1020.17	140.1	.18981	1.7169
2.6	136.10	104.32	1123.45	1019.13	135.1	.19233	1.7109
2.7	137.55	105.78	1123.89	1018.11	130.4	.19477	1.7050
2.8	138.95	107.19	1124.32	1017.13	126.0	.19713	1.6993
2.9	140.31	108.56	1124.73	1016.17	121.9	.19941	1.6937
3.0	141.63	109.89	1125.14	1015.25	118.1	.20162	1.6883
3.2	144.16	112.43	1125.91	1013.48	111.3	.20584	1.6779
3.4	146.55	114.83	1126.64	1011.81	105.0	.20981	1.6681
3.6	148.83	117.13	1127.33	1010.21	99.5	.21358	1.6589
3.8	151.01	119.32	1128.00	1008.68	94.6	.21718	1.6501
4.0	153.09	121.42	1128.63	1007.21	90.1	.22063	1.6418
4.2	155.09	123.43	1129.24	1005.81	86.09	.22390	1.6338
4.4	157.01	125.36	1129.83	1004.47	82.41	.22702	1.6262
4.6	158.85	127.22	1130.39	1003.17	79.04	.23002	1.6189
4.8	160.63	129.01	1130.93	1001.92	75.94	.23292	1.6119
5.0	162.34	130.74	1131.45	1000.71	73.09	.23568	1.6052
5.2	164.00	132.41	1131.96	999.55	70.44	.23837	1.5987
5.4	165.60	134.02	1132.45	998.43	67.99	.24095	1.5925
5.6	167.16	135.60	1132.92	997.33	65.71	.24346	1.5865
5.8	168.68	137.13	1133.39	996.26	63.58	.24591	1.5807
6.0	170.15	138.61	1133.84	995.23	61.59	.24826	1.5751

Digitized by Google

ELOW ATMOSPHERIC PRESSURE. TABLE XI.

	t	q	H	r	s	a	b
.2	171.57	140.05	1134.27	994.22	59.72	.25053	1.57420
.4	172.96	141.45	1134.69	993.24	57.96	.25274	1.56920
.6	174.31	142.81	1135.10	992.29	56.31	.25489	1.56436
.8	175.63	144.14	1135.51	991.36	54.76	.25699	1.55966
.0	176.92	145.44	1135.90	990.46	53.29	.25903	1.55509
.2	178.17	146.70	1136.28	989.58	51.90	.26101	1.55065
.4	179.40	147.94	1136.66	988.72	50.58	.26296	1.54632
.6	180.60	149.15	1137.02	987.88	49.33	.26485	1.54212
.8	181.77	150.33	1137.38	987.05	48.14	.26669	1.53801
.0	182.92	151.49	1137.73	986.24	47.01	.26849	1.53400
.2	184.05	152.63	1138.08	985.44	45.93	.27025	1.53007
.4	185.15	153.74	1138.40	984.66	44.90	.27199	1.52625
.6	186.23	154.83	1138.74	983.90	43.92	.27368	1.52252
.8	187.29	155.90	1139.06	983.16	42.98	.27534	1.51888
.0	188.33	156.95	1139.38	982.43	42.09	.27696	1.51533
.2	189.35	157.98	1139.69	981.71	41.23	.27854	1.51185
.4	190.35	159.00	1140.00	981.00	40.40	.28010	1.50840
.6	191.34	160.00	1140.30	980.30	39.61	.28164	1.50504
.8	192.31	160.98	1140.59	979.61	38.85	.28315	1.50176
.0	193.26	161.94	1140.89	978.95	38.12	.28462	1.49856
.2	194.19	162.88	1141.17	978.29	37.42	.28605	1.49542
.4	195.11	163.81	1141.45	977.64	36.74	.28747	1.49233
.6	196.02	164.73	1141.73	977.00	36.09	.28888	1.48929
.8	196.91	165.63	1142.00	976.37	35.46	.29025	1.48631
.0	197.79	166.52	1142.27	975.75	34.86	.29160	1.48338
.2	198.65	167.39	1142.53	975.14	34.27	.29293	1.48051
.4	199.50	168.25	1142.79	974.54	33.71	.29423	1.47769
.6	200.34	169.10	1143.04	973.94	33.16	.29552	1.47491
.8	201.17	169.94	1143.30	973.36	32.63	.29679	1.47218
.0	201.98	170.76	1143.54	972.78	32.12	.29804	1.46949
.2	202.78	171.57	1143.79	972.22	31.63	.29927	1.46686
.4	203.58	172.38	1144.03	971.65	31.15	.30047	1.46425
.6	204.37	173.18	1144.27	971.09	30.69	.30167	1.46168
.8	205.14	173.96	1144.51	970.55	30.24	.30285	1.45917
.0	205.90	174.73	1144.74	970.01	29.80	.30400	1.45669
.2	206.65	175.49	1144.97	969.48	29.37	.30514	1.45425
.4	207.40	176.25	1145.20	968.95	28.96	.30627	1.45183
.6	208.13	176.99	1145.42	968.43	28.56	.30739	1.44946
.8	208.85	177.72	1145.64	967.92	28.17	.30848	1.44714
.0	209.57	178.44	1145.86	967.42	27.80	.30957	1.44484
.2	210.28	179.15	1146.08	966.93	27.43	.31064	1.44257
.4	210.98	179.86	1146.29	966.43	27.07	.31170	1.44033
.5	211.33	180.21	1146.40	966.19	26.89	.31222	1.43922
.6	211.67	180.56	1146.50	965.94	26.72	.31273	1.43813
.7	212.00	180.90	1146.60	965.70	26.55	.31324	1.43705

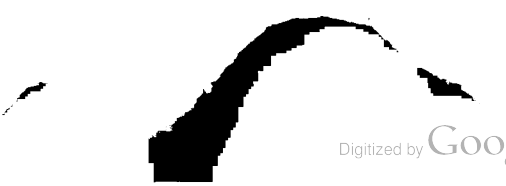

Digitized by Google

TABLE XII. OUTPUT OF RANKINE CYCLE PER

p_2	p_1 = 60	70	80	90	100	110
H_1 =	1171.2	1174.3	1177.0	1179.6	1181.9	1184.3
0.1	3.0	361.9	370.9	379.8	385.8	392.0	397.7
0.2	21.3	332.3	341.6	349.7	356.8	363.2	369.0
0.3	32.7	314.3	323.7	331.9	339.1	345.6	351.5
0.4	41.1	301.2	310.7	318.9	326.3	332.8	338.7
0.5	47.9	290.8	300.3	308.7	316.1	322.7	328.6
0.6	53.5	282.1	291.7	300.1	307.5	314.2	320.1
0.7	58.4	274.6	284.3	292.8	300.3	306.9	313.0
0.8	62.7	268.1	277.9	286.4	293.9	300.6	306.7
0.9	66.6	262.3	272.1	280.6	288.2	294.9	301.0
1.0	70.1	257.0	266.9	275.4	283.0	289.8	295.9
1.2	76.3	247.8	257.7	266.4	274.0	280.8	287.0
1.4	81.6	239.9	249.8	258.5	266.2	273.1	279.3
1.6	86.3	232.9	242.9	251.7	259.4	266.3	272.5
1.8	90.6	226.7	236.8	245.5	253.3	260.3	266.5
2.0	94.5	221.1	231.2	240.0	247.8	254.8	261.1
2.2	98.0	215.9	226.1	235.0	242.8	249.8	256.1
2.4	101.3	211.2	221.4	230.3	238.1	245.2	251.5
2.6	104.3	206.8	217.1	226.0	233.9	240.9	247.1
2.8	107.2	202.7	213.0	221.9	229.8	236.9	243.2
3.0	109.9	198.8	209.2	218.1	226.1	233.2	239.4
3.2	112.4	195.2	205.6	214.6	222.5	229.6	236.1
3.4	114.8	191.8	202.2	211.2	219.2	226.3	232.8
3.6	117.1	188.6	199.0	208.0	216.0	223.2	229.6
3.8	119.3	185.5	195.9	205.0	213.0	220.2	226.5
4.0	121.4	182.5	193.0	202.1	210.1	217.3	223.7
4.5	126.3	175.7	186.2	195.3	203.4	210.6	217.2
5.0	130.7	169.5	180.1	189.2	197.4	204.6	211.2
5.5	134.8	163.9	174.5	183.7	191.9	199.2	205.7
6.0	138.6	158.6	169.3	178.5	186.7	194.1	200.7
7.0	145.4	149.3	160.0	169.3	177.6	185.0	191.6
8	151.5	141.0	151.8	161.2	169.5	177.0	183.7
9	157.0	133.7	144.5	154.0	162.3	169.8	176.5
10	161.9	127.0	137.9	147.4	155.8	163.3	170.1
11	166.5	120.9	131.8	141.4	149.8	157.4	164.1
12	170.8	115.3	126.3	135.9	144.4	151.9	158.7
13	174.7	110.0	121.1	130.7	139.2	146.8	153.7
14	178.4	105.1	116.3	125.9	134.5	142.1	149.0
14.7	180.9	101.9	113.1	122.8	131.3	139.0	145.9
15	181.9	100.6	111.7	121.4	130.0	137.7	144.6
16	185.3	96.2	107.5	117.2	125.8	133.5	140.4
18	191.4	88.2	99.5	109.3	118.0	125.7	132.7
20	197.0	81.0	92.4	102.3	111.0	118.7	125.7
22	202.2	74.4	85.8	95.7	104.5	112.3	119.3
24	207.0	68.3	79.8	89.7	98.5	106.4	113.5
26	211.5	62.6	74.2	84.2	93.0	100.9	108.0

Digitized by Google

POUND OF DRY SATURATED STEAM. TABLE XII.

120	130	140	150	160	180	200	220	
185.9	1187.8	1189.5	1191.2	1192.7	1195.7	1198.3	1200.8	p_s
402.9	407.6	412.1	416.2	420.1	427.2	433.6	439.4	0.1
373.3	379.2	383.7	388.0	391.9	398.2	405.7	411.6	0.2
356.8	361.8	366.4	370.7	374.7	382.1	388.7	394.7	0.3
344.1	349.2	353.8	358.1	362.2	369.6	376.3	382.3	0.4
334.1	339.2	343.8	348.2	352.3	359.8	366.7	372.6	0.5
325.7	330.8	335.5	339.9	344.0	351.5	358.3	364.4	0.6
318.5	323.6	328.4	332.8	336.9	344.5	351.3	357.5	0.7
312.2	317.4	322.1	326.6	330.7	338.3	345.2	351.3	0.8
306.6	311.8	316.6	321.0	325.2	332.8	339.7	345.9	0.9
301.5	306.7	311.5	316.0	320.2	327.8	334.7	340.9	1.0
292.6	297.8	302.7	307.2	311.4	319.1	326.0	332.3	1.2
285.0	290.2	295.1	299.6	303.9	311.6	318.6	324.9	1.4
278.3	283.5	288.4	293.0	297.2	305.1	312.1	318.4	1.6
272.3	277.6	282.5	287.1	291.3	299.2	306.2	312.6	1.8
266.8	272.2	277.1	281.7	286.0	293.9	300.9	307.3	2.0
261.9	267.2	272.2	276.8	281.1	289.0	296.1	302.5	2.2
257.3	262.7	267.7	272.3	276.6	284.6	291.7	298.1	2.4
253.1	258.5	263.5	268.1	272.5	280.4	287.6	294.0	2.6
249.1	254.5	259.6	264.2	268.6	276.6	283.7	290.2	2.8
245.4	250.8	255.9	260.5	264.9	272.9	280.1	286.6	3.0
241.9	247.4	252.4	257.1	261.5	269.5	276.7	283.2	3.2
238.7	244.1	249.2	253.9	258.2	266.3	273.5	280.0	3.4
235.5	241.0	246.1	250.8	255.1	263.2	270.4	277.0	3.6
232.5	238.0	243.1	247.8	252.2	260.3	267.5	274.1	3.8
229.7	235.2	240.3	245.0	249.4	257.5	264.8	271.3	4.0
223.1	228.7	233.8	238.5	242.9	251.1	258.4	265.0	4.5
217.2	222.7	227.9	232.6	237.1	245.3	252.6	259.2	5.0
211.8	217.3	222.5	227.3	231.7	240.0	247.3	254.0	5.5
206.7	212.3	217.5	222.3	226.8	235.0	242.4	249.1	6.0
197.7	203.3	208.5	213.4	217.9	226.2	233.6	240.4	7.0
189.8	195.5	200.7	205.6	210.1	218.5	226.0	232.7	8
182.7	188.4	193.7	198.6	203.2	211.6	219.1	225.9	9
176.3	182.0	187.3	192.2	196.8	205.3	212.8	219.7	10
170.4	176.2	181.5	186.4	191.1	199.5	207.1	214.0	11
165.0	170.8	176.1	181.1	185.7	194.3	201.9	208.8	12
160.0	165.8	171.1	176.1	180.8	189.3	197.0	203.9	13
155.3	161.1	166.5	171.5	176.2	184.8	192.4	199.4	14
152.2	158.0	163.5	168.5	173.2	181.8	189.4	196.4	14.7
150.9	156.7	162.2	167.2	171.9	180.5	188.2	195.1	15
146.8	152.6	158.1	163.1	167.8	176.4	184.2	191.1	16
139.1	145.0	150.4	155.5	160.2	168.9	176.7	183.7	18
132.2	138.1	143.6	148.7	153.4	162.2	170.0	177.1	20
125.8	131.8	137.3	142.	147.2	156.0	163.8	170.9	22
120.0	126.0	131.5	1	4	150.3	158.1	165.3	24
114.5	120.5	126.1	1		145.0	152.9	160.0	26

Digitized by Google

TABLE XII.—*Continued.*

p_2 \ p_1	220	240	260	280	300	350	400	300
H_1	1200.8	1203.1	1205.3	1207.3	1209.3	1213.7	1217.6	1224.5
0.1	439.4	444.8	449.5	454.2	458.5	468.1	476.3	490.2
0.2	411.6	417.1	422.1	426.7	431.1	440.9	449.3	463.5
0.3	394.7	400.2	405.3	410.0	414.4	424.3	432.8	447.1
0.4	382.3	387.9	393.0	397.8	402.2	412.2	420.8	435.2
0.5	372.6	378.2	383.4	388.1	392.6	402.7	411.3	425.6
0.6	364.4	370.1	375.3	380.1	384.6	394.7	403.3	418.0
0.7	357.5	363.2	368.3	373.2	377.7	387.9	396.6	411.3
0.8	351.3	357.1	362.3	367.1	371.7	381.9	390.6	405.4
0.9	345.9	351.6	356.9	361.7	366.3	376.6	385.3	400.2
1.0	340.9	346.7	352.0	356.9	361.5	371.7	380.5	395.4
1.2	332.3	338.1	343.4	348.3	353.0	363.3	372.2	387.1
1.4	324.9	330.7	336.1	341.0	345.7	356.0	365.0	380.0
1.6	318.4	324.3	329.6	334.6	339.2	349.7	358.6	373.7
1.8	312.6	318.5	323.8	328.8	333.5	344.0	353.0	368.1
2.0	307.3	313.2	318.6	323.6	328.3	338.9	347.9	363.1
2.2	302.5	308.5	313.9	318.9	323.6	334.2	343.2	358.5
2.4	298.1	304.1	309.5	314.5	319.3	329.8	338.9	354.2
2.6	294.0	300.0	305.4	310.5	315.2	325.9	335.0	350.3
2.8	290.2	296.2	301.6	306.7	311.5	322.1	331.2	346.6
3.0	286.6	292.6	298.1	303.1	307.9	318.6	327.7	343.2
3.2	283.2	289.2	294.7	299.8	304.6	315.3	324.5	339.9
3.4	280.0	286.1	291.6	296.7	301.5	312.2	321.4	336.9
3.6	277.0	283.0	288.6	293.7	298.5	309.2	318.4	333.9
3.8	274.1	280.2	285.7	290.8	295.6	306.4	315.6	331.2
4.0	271.3	277.4	283.0	288.1	292.9	303.7	313.0	328.6
4.5	265.0	271.1	276.7	281.8	286.7	297.5	306.8	322.4
5.0	259.2	265.3	270.9	276.1	281.0	291.9	301.2	316.9
5.5	254.0	260.1	265.7	270.9	275.8	286.8	296.1	311.8
6.0	249.1	255.3	260.9	266.1	271.0	282.0	291.4	307.2
7.0	240.4	246.6	252.3	257.5	262.5	273.5	282.9	298.6
8	232.7	239.0	244.7	250.0	254.9	266.0	275.5	291.3
9	225.9	232.2	237.9	243.2	248.2	259.4	268.9	284.9
10	219.7	226.0	231.7	237.1	242.1	253.3	262.9	279.0
11	214.0	220.3	226.1	231.5	236.5	247.8	257.4	273.6
12	208.8	215.2	221.0	226.3	231.4	242.7	252.3	268.6
13	203.9	210.3	216.1	221.5	226.6	237.9	247.6	263.9
14	199.4	205.8	211.6	217.1	222.2	233.5	243.2	259.6
14.7	196.4	202.8	208.7	214.2	219.2	230.6	240.4	256.7
15	195.1	201.6	207.4	212.9	218.0	229.4	239.1	255.5
16	191.1	197.6	203.5	208.9	214.1	225.5	235.3	251.7
18	183.7	190.2	196.1	201.6	206.8	218.3	228.1	244.6
20	177.1	183.6	189.6	195.0	200.2	211.8	221.6	238.2
22	170.9	177.5	183.4	189.0	194.2	205.8	215.7	232.4
24	165.3	171.9	177.9	183.4	188.7	200.3	210.3	227.0
26	160.0	166.6	172.6	178.2	183.5	195.2	205.2	222.0

Digitized by Google

INDEX.

Absolute Thermodynamic Efficiency, 639
Acoustic Vibrations in Steam-jet, 570
Actual Performance of the Steam in the Turbine, § 73; 558–577
Adjustable Valves, 278
Adjustment by Governor, 398–421
  By Centrifugal Shaft-governor, 409
  By Fly-ball Governor, 400
Air-brake Pump, Westinghouse, 360
Air-compressors, 35
Allen Link-motion, 238
Allis-Chalmers Drop-valve Gear, 351
  Engines, 29, 30, 46
American-Ball Engine, 4
Ames Governor, 408
Analysis of an Actual Engine (Compound), 455, 470
Analysis of a Centrifugal Shaft-governor, 385
  Of an Inertia Governor, 417
Analysis of Total Energy-loss (in Turbine), 577
Angle of Advance, 184
Armstrong-Sweet Governor, 384
Atlas Corliss Engines, 16, 20

Balancing the Flat Valve, 269
Balancing the Rotor, 582
Ball Four-valve Gear, 336
Bearings:
  For Marine Engines, 165
  For Stationary Engines, 161
  For the Locomotive, 169
  For Turbines, 583
  In Connecting-rods, 152
Behavior of Centrifugal Governor, 409
Behavior of Steam-jet in Vane-channel, 574
Blades (of Turbine), see Vanes
Blowing Engines, 37
Bolts for Cylinder-heads, 110
Box Pistons, 113
Brake-action in the Governor, 415
Brown Reversing-gear, 427
Buckeye Engines, 2, 7, 217
  Governor, 371
  Valve-gear, 254

Callendar's Curves for Superheated Steam, 634
Cameron Steam-pump Valve-gear, 358
Cams, in Lift-valve Gears, 352, 354
Centers, Instantaneous, 373
Centrifugal Force, Moment of, 435
Centrifugal Governor, Behavior of, 409
Channel-form and Area of Cross-section, 555
Channel Variation within the Multiple-impulse Stage, 580
Characteristics of High-speed Engine, 15
Classification and General Form (of Engines), § 41; 1–60
Classification of Steam-turbines, 516
Collman Drop-valve Gear, 351
Complete Expansion, 441
Composite Types of Engines, 24
Compound Engines:
  Cylinder Proportions, 504
  High-ratio, 491
  High-speed, 6, 10–14, 82–86
  Large Sized, 25–29

Digitized by Google

Compound Engines:
Single-acting Tandem, 502
Compound-engine Steam-diagrams:
Allis-Chalmers Pumping-engine, Triple, 492
Diagram Factor, 500
Distribution of Losses, 500
Fleming Four-valve High-ratio, [490
General Methods, 476
Holly Pumping-engine, 481
Ideal Diagrams, 456, 473
Jacketed and Unjacketed Engines, [486
Leavitt Pumping-engine, 482
Locomotives, 479
Low-speed, Direct-expansion, 481
Marine Engines, 496, 498
McIntosh & Seymour Engine, 487
Nordberg Pumping-engine, Quadruple, 493
Snow Pumping-engine, Triple, 492
Vauclain Locomotive, 461
Willans Compound, 503
With High Superheat, 489
Worthington Pumping-engine, High-duty, 483; Triple, 484
Compound Engines, Theoretical Analysis, 438–476
Case of Complete Expansion, 441
Construction of Diagrams, 467, 471
Direct-expansion Engine, 455
Division of Work, 440, 445, 454
General Conclusions, 448
Infinite Receiver, 439
Intermediate Curves, 468, 472, 474
Mathematical Relations, 443, 451
No Receiver, 449
Quarter-crank Engine, 462, 465
Receiver-action, in General, 474
Value of Volumetric Analysis, 475
Variable Valve-action, 459, 469
Variation in the Steam-volume, 464, 470
Vauclain Locomotive, 456
Compound Valves, 281 [377
Concentration and Reduction of Mass,
Conditions of Stability (in the Governor), 416
Connecting-rods, 145
Bearings and their Adjustment, [152
For Locomotives, 145
For Stationary Engines, 147
Marine Type, 148, 151
Types of Rod-ends, 146
Control of Speed-regulation by Governor, 394
Cooper Corliss Engine, 18
Corliss Cylinder, 90
With Valves in Heads, 100
Corliss Engines, 19
General Type, 23
Corliss Engine-beds, 63
Corliss Valve-gear, § 56; 301–329
Control of Cut-off, 305
Cut-off Action, 310
Cut-off Mechanism, 304
Dash-pot, 328
Direct and Indirect, 316
Eccentric-setting and Valve-action, 309
Governor, 306
Holly Pumping-engine Gear, 323
Indicator Diagrams, 311
Moving Trip Cams, 320
Nordberg, Moving Cams, 322
Releasing-devices for Driving-rods, 302, 327
Reversible Gear, 324
Safety-cams, 305
Snow Pumping-engine Gear, 320
Use of Two Eccentrics, 318
Valve-diagrams, 310
Valve-movement, 301, 307
Various Forms of Gear, 316
Various Releasing Mechanisms, 325
Corliss Valves, 313
Counterweights, 155–160
Cranks:
Built-up, Overhanging, 155
Built-up, Inside, 158
Solid-forged, 157, 160
Cross-area of the Steam-channel, 577
Cross-head, The, 130
For Bored Guides, Corliss Types, [137
For Marine Engines, 138
Locomotive Types, 133
Types of, 131
Curtis Turbine, 525
Blading, 590
Tests of, 655
Valves, 596
Curves of Governor-action, 402, 410, 418
Cut-off Mechanism, Corliss Valve-gear, 304
Cut-off Valves, Double-valve Gear, 286
Cut-off Valve with the Stephenson Link-motion, 258
Cut-off, Variable, in Double-valve Gear, 254
Cylinder, The, § 43; 73–112

Digitized by Google

Cylinder, The, Ball Design, 80
Buckeye, 82
Corliss, 90, 98, 103
Drop-valve, 97, 349
Fleming Four-valve, 92
Four Slide-valve, 79
Holly Pumping-engine, 100
Marine-engine, 88
Marine, with Liners, 105
McIntosh & Seymour Six-valve, 94
Proportions, Diameter and Stroke, 111
Reeves Vertical Compound, 83
Simple Locomotive, 75
Strength of, 106
Vauclain Locomotive, 85
Westinghouse Compound, 84
Wheelock, 96
With Gridiron Valves, 93
With Liners, 102
With Piston-valve, 81
With Solid-cast Jackets, 102
Cylinder-arrangements in Multiple-expansion Engine, 511
Cylinder Proportions in Practice, § 70; 504–514

Dash-pots for Corliss Engines, 328
Deane Steam-pump Valve-gear, 359
Deflection of a Jet, 539, 572
De Laval Turbine, 519
Blading, 588
Governor and Valve, 592
Nozzle, 587
Nozzle-valve, 597
Wheel, 582
Design and Construction of the Turbine, § 74; 577–598
Design of the Steam-passages, 111
Detail of Cylinder-casting, 73
Diagram Factor, 500
Diagrams for Compound Engines:
Construction of, 467, 471
Quarter-crank Engine, Ideal Case, 465; Actual Case, 470
Simplest Ideal, 455
Vauclain Locomotive, 456, 461
Diagrams from Multiple-expansion Engines, § 69; 476–504
Diagrams of Engine-performance, 645–648
Diagrams of Turbine-performance, 654–656
Different Valve-arrangements, 78
Diffuser Action with Steam-jet, 571
Direct and Indirect Arrangements, Corliss Valve-gear, 316
Direct-expansion Engine, § 67; 449–462
Diagrams from, 481
Direction of Running, 57
Discussion of Engine Tests, § 77; 642–652
Discussion of Turbine Tests, § 78; 653–659
Disk Pistons, 118
Distribution of the Losses (in Multiple-expansion Engine), 500
Division of Work between the Cylinders, 440
Double Valves, 286
Double-valve Gear, § 53; 249–259
Buckeye Gear, 254
Eccentric-setting, 253
Functions of Cut-off Valve, 252
Meyer Gear, 249
Movement of Cut-off Valve, 250
Positive and Negative Valves, 252
Varying the Cut-off, 254
Varying the Virtual Eccentric, 256
Drawing the Pressure-volume Diagram, 467
Driving-force on the Vane, 542
Drop-valve Engine, 95
Drop-valve Gear, see Lift-valve Gear
Duplex Steam-pump, 356
Valve-gear, 355
Dynamic-force Cycle, 515

Eccentric, Details of, 288
Eccentric, Virtual, 251, 256
Eccentric-friction, 391
Eccentric-rod, Effect of,
Upon Valve-movement, 202
With Shifting Eccentric, 205
Eccentric-setting,
Angle of Advance, 185
Case of Separated Stroke-lines, 188
Corliss Gear, 309, 312
Direct and Indirect, 187
Effect of Rocker-arm, 187
For Reversible Engine, 211
In Double-valve Gear, 253
Eccentric-straps, 292
Effect of a Reversing Rocker-arm, 187
Effect of Steam-jacketing, 485, 648
Effect of Superheat, in Engines, 650; in Turbines, 658
Effect of Vacuum in Turbines, 656
Effect of Variable Valve-action, 459, 469
Efficiency, Thermodynamic, 639–641

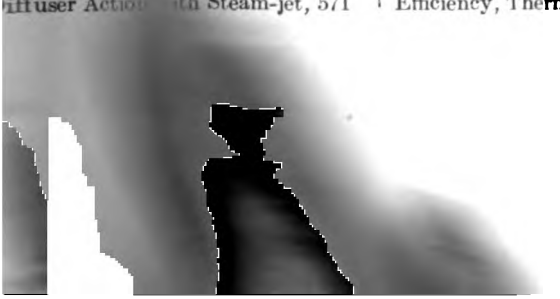

Digitized by Google

Efficiency, Variation of, with Load,
Elektra Turbine, 530 [644, 654
Enclosed-guide Type of Engine, 9
Energy-loss in Turbine, 577
Engine Bed or Frame:
Compact, High-speed Type, 60
Corliss Type, 63
Locomotive, 71
Marine, 67
Tangye, 5, 61
Vertical Stationary, 65
Engine-mechanisms, Special, 55
Engine-performance, Curves of, 645–
Engine with [648
High Superheat, 488
Infinite Receiver, 439
No Receiver, 449
Separate Slide-valves, 78
Separate Stroke-lines, 187
Special Steam-cycle, 493
Entropy-temperature Diagrams, 559, 562
Equalizing the Cut-offs, 199, 210
Evolution of the Slide-valve, 185
Exact Reuleaux Diagram, 204
Expansion of Steam, in Engine-tests,
Experiments on [632
Flow of Steam, 563
Pressure in Jet, 569
Reaction of Jet, 567
Velocity of Jet, 566

Fishkill Corliss Engine, 17
Flat Valves for Marine Engines, 262
Fleming Engines, 10, 24, 92
Diagrams from Compound, 490
Four-valve Gear, 334
Flow through Orifices, 563
Flow with a Diverging Nozzle, 565
Fly-ball Governor, 306, 368
Adjustment by, 400
Force-actions in, 379
Reduction of Centrifugal Force,
Reduction of Mass, 398 [381
Reduction of Weight, 382
Regulation by, 383, 395
Fly-wheels:
Air-resistance to Movement, 174
In Halves, 170
Large in Segments, 172
Small, Solid-cast, 169
Strains in, 173
Fly-wheel Effect, in Governor Analysis, 399
Force Reduction of 372

Force-actions:
In Fly-ball Governor, 379
In Shaft-governor, 369, 392
Of the Valve-gear, 388
Framework of the Engine, § 42; 60–
See also Engine-bed [73
Friction of Eccentric, 391
Friction of Steam, 574
Functions of the Cut-off Valve, 252
Functions of the Governor, 367

Gardner Governor for Air-compressor, 422
General Character of the Receiver-action, 474
General Considerations as to Turbine Tests, 653
General Form and Action of the Turbine, § 71; 515–537
General Relations in the Compound Engine, 448
Geometry of the Valve-diagram, § 47; 188–193
Gooch Link-motion, 238
Governor:
Aspinall, 431
Behavior of Centrifugal, 409
Brake-action in, 415
Classification, 367
Combined Speed and Pressure, 421
Fly-ball Type, 306, 368
For Air-compressor, 422
For Marine Engines, 430
For Snow Pumping-engine, 428
Force-actions, Shaft Type, 369
Functions, 367
Indirect, for Joy Gear, 427
Inertia Type, 417
Oscillation of, 412
Stability in Adjustment, 411
Various Forms of Shaft Type, 370
Governor-action, Curves of, 402, 410,
Aspinall Governor, 432 [415
Indirect Governing, 426
In the Turbine, 597
Governor, Adjustment by, 338
Brake-action, 415
Fly-wheel Effect, 399
Mean Effective Pressure, 399
Oscillation of Governor, 412
Reduced Mass, 398, 407
Stability in Adjustment, 411
Governors and Controlling Valves for Turbines, 592
Greene Valve-gear, 329

Digitized by Google

eene-Wheelock Engine, 22
ide-bars, 143
ides, Enclosed Type, 9
ides for Valve-rods, 297, 300

eat-consumption, in Tests, 635
gh-ratio Compound Engines, 491
gh-speed Compound Engines, 83
gh-speed Engines, Characteristics
Evolution of, 3 [of Type, 15
isting and Rolling-mill Engines, 31
lly Pumping-engine, 41
Steam Diagrams, 481
Valve-gear, 323
rizontal-Vertical Engine, 29
rse-power and Steam-consumption, 633

eal Action with Receiver, 452
deal" Engines, 8, 9
pulse of the Jet, 537
pulse Turbine Defined, 517, 544
licator Diagrams:
Air-brake Pump, 363
At Different Speeds, 201
Combined Diagrams, General Methods, 476
Compound Corliss Engines, 486,
Compound Locomotives, 479 [489
Compound Pumping-engines, 481–
Corliss Engines, 311 [483
Fleming 4-valve Compound, 490
From Double-valve Engines, 258
Low-speed Direct-expansion Engine, 481
McIntosh & Seymour Compound,
Marine Engines, 496, 498 [487
Nordberg Pumping-engine, Quadruple, 493
Pumping-engines 481–484, 492, 493
Reynolds Pumping-engine, Triple,
Shaft-governor Engine, 200 [492
Snow Pumping-engine, Triple, 492
Steam-pumps, 362
Vauclain 2-crank Locomotive, 460
Villans Compound, 503
With High Superheat, 489
With the Link-motion, 220
Direct Governing 427
rtia-force in the Shaft-governor,
rtia Governor, 417 [405
rtia of the Valve-gear, 389
ersoll-Sergeant Air-compressor, 33, 34

Instantaneous Centers, Relative, 373
Isodiabatic Curves, 494

Jackets:
Made by Liners, 102
Solid-cast, 102
Jackets and Heaters, Effect of, 648
Jet, see Steam-jet
Joints, Steam-tight, 109
Joy Valve-gear, 244

Kerr Turbine, 530
Kinematic Relations in Governor, 386
Kinematics of the Link-motion, § 51; 220–241

Labyrinth Packing, 586
Lap, Lead, and Angle of Advance,
Large Stationary Engines, 27 [184
Layout of the Engine, 56
Lead, Influence and Variation of, 205
Leakage in the Turbine, 576 [482
Leavitt Pumping-engine Diagrams,
Lift-valve Gears, § 59; 347–355
Allis-Chalmers Gear, 351
Collman Gear, 351
Linkage Gears, 353
Locations and Arrangements, 348
Releasing Gears, 352
Rocking Cams, 352
Rotating Cams, 354
Valve-gear, General Form, 350
Various Forms of Valves, 347
Limit of Plant-efficiency, 640
Link-motion:
Box Link, 299
Cut-off Valve with, 258
Direct and Indirect, 217
Gooch and Allen, 238
Locomotive Link, 214
Locomotive Type, 212
Marine-engine Type, 216
Rods Open and Crossed, 217
Stephenson, 211
Link-motion, Kinematics of:
Combined Rod-effects, 226, 228
Curvature of the Link, 222
Effect of Rod-slant, 225
Harmonic Motion Transmitted, 221
Inclination of the Eccentric-rods, 222
Location of the Hanger-pin, 235
Mechanism Simplified, 220
Non-symmetrical Eccentrics, 236
Oscillation of the Rods, 230

Digitized by Google

Link-motion, Kinematics of:
Slip and Offset, 232
Load and Efficiency, of Engines, 644; of Turbines, 654
Locomotive, The, 49
Bearings, 169
Cross-heads, 133
Framework, 71
Pistons, 114
Piston-valves, 275, 282
Slide-valves, 260
Wheel and Axle, 157
Losses in Multiple-expansion Engine, Distribution of, 500
Lost Motion, Effect of, in Valve-gear, 207
Low-speed Direct-expansion Engines, Diagrams from, 481

McIntosh & Seymour Engines, 25, 28, [94
Diagrams from, 487
Six-valve Gear, 338
Marine Engines, 49
Bearings, 169
Cross-heads, 138
Cylinder-proportions, 508
Diagrams from, 496, 498
Governors, 430
Pistons, 119
Shafts, 169
Valves, 262, 277
Mass, Concentration and Reduction [of, 377
Mass, Reduction of:
In Fly-ball Governor, 398
In Shaft-governor, 407
Mathematical Relations in the Compound Engine, 443, 451
Mechanical Efficiency, Engines and Turbines, 606, 651
Mechanical Efficiency of Pumping-engine, 652
Mechanics of the Ideal Steam-action, § 72; 537–558
Meyer Valve-gear, 249
Moment of Centrifugal Force (in the Governor), 435
Movement Diagrams,
For the Valve, 176–184
Geometrical Proofs of Diagrams, 188
Movement of the Valve, with the Link-motion, 218
Moving the Eccentric-center, 193
Moving Trip-cams Corliss Valve-gears, 320
Multiple-expansion Engines:
Actual Diagrams, 476–504
Cylinder Proportions, 504–514
Theoretical Analysis, 438–476
Multiple-impulse Turbines, 524
Multiple-ported Valves:
Flat, 261, 264
Piston, 281
Multiple-stage One-impulse Turbines, [521
Murray Corliss Engine, 21

Non-central Stroke-line, in Valve-gear, 208
Non-harmonic Gears with Variable Eccentric, § 58; 332–347
Non-harmonic Movement of Corliss Valves, 301, 307
Nordberg-Corliss Gear, with Moving Trip-cams, 322
Nordberg Pumping-engine, Diagrams from, 493
Nozzles and Distributors, 587

Observations, Results, and Calculations, § 76; 629–642
Oscillation of the Governor, 412

Packing, for Pistons, 123; for Piston-[rods, 127
Parsons Turbine, 531
Blading, 591
Governor and Valve, 593
Tests of, 656
Path of the Jet, 557
Performance of Rankine Cycle, 666
Performance of the Turbine, Limit of, 558; Net, 561
Performance per Pound of Steam, 657
Piston, The, 112
Built-up Box Type, 116
Locomotive Types, 114
Marine Types, 118
Solid Box Type, 113
Solid Disk Type, 118
Strength of, 120
Piston-rod, 121
Connections to Cross-head, 126
Strength of, 122
Piston-valves, 274
Adjustable, 278
Double, 287
For Locomotives, 275
For Marine Engines, 277
Multiple-ported, 281
Plain Solid, 27[illegible]
Porter-Allen V[illegible]

Digitized by Google

ort-opening, Width of, 197
ower Engines, Triple-expansion, 495
roblem of Adjustment, § 64; 398–421
roblem of Regulation, § 63; 379–398
roportioning the Valve, 267
roportions of Cylinders, 111
ressure Governor, 422
ressure in Steam-jet, 569
ressure, Range of, in Practice, 630
Influence upon Performance, 643, 656
ressure-volume Diagrams, Compound Engines, 465
ımping-engines, 43
Mechanical Efficiency of, 652
Steam Diagrams, 481–484, 492, 493

ıality-curves, for the Steam Diagram, 485
ıality of Steam, in Tests, 634
ıarter-crank Compound Engine, 462

ıdial-flow Turbine, 530
ıdial Valve-gears, § 52; 241–249
Joy, 244
Porter-Allen, 332
Walschaert, 241
ınkine Cycle, Diagram of, 559
Output of, Table XII, 664
ıteau's Experiments, Flow of Steam, 563
ıteau Turbine, 520, 523
Blading, 589
Stuffing-box, 586
:action Experiments, Steam Jet, 567
:action of the Valve-gear, 388
:action Turbine Defined, 517, 544,
:action Wheel, 549 [549
:ceiver-action, General Character of, 474
:ceiver-compound Type, § 68; 462–
:ceiver, in Compound Engines: [476
Ideal Action, 452
Infinite Receiver, 439
No Receiver, 449
:ciprocating Parts of the Engine, § 44; 112–154
:duction of Force, 372, 375, 381,
:duction of Mass, 377 [393
In Fly-ball Governor, 398
In Shaft-governor, 407
Reeves Vertical Compound Engine, 6
Regenerative Feed-heating, 493, 636
Regulation by Governor:
Control of, 394
Fly-ball Governor, 383
Shaft-governor, 394
Reheater, Function of, 649
Relative Instantaneous Centers, 373
Relative Thermodynamic Efficiency, 641
Relative Velocity and Reduction of Force, 375, 386
Releasing Devices, Valve-drives, 327
Releasing-gears, Corliss Engines, 304, 325
Releasing Gears with Gridiron Valves, § 57; 329–332
Reuleaux Valve-diagram, 176
With Rod-effect, 204
Reversible Corliss Engine, 324
Reversible Turbine, 535
Reversing-gears, 425
Reversing the Engine, 211
Reynolds Horizontal-Vertical Engine, 29
Reynolds Vertical Pumping-engine, 46
Diagrams from, 492
Richardson Balanced Valve, 77
Riedler-Stumpf Turbine, 528
Rites Governor, 372, 417
Robb-Armstrong Governor, 372
Rockers and Valve-rod Slides, 296
Rocker-arm, Effect of a Reversing, 187
Rockwood High-ratio Compound Engine, 491
Rod-bearings, and their Adjustment, 152
Rod-effect with Shifting Eccentric, [205
Rotary Engine, 598
Rotating Parts of the Engine, § 45; 154–174
Rotation Losses, in the Turbine, 575
Rotor of the Turbine, 581

Safety-cams, Action of, in Corliss [Gear, 305
Safety-stops, 423
Schmidt Motor, Compound, 503
Secondary Influences and Special Cases (in Valve-action), § 49; 202–211
Self-centering Valve-gear, 365
Separate Slide-valves, Engines with, [78
Shafts, 154
For Corliss Engines, 155

Digitized by Google

Shafts, For Marine Engines, 159
Strength of, 161
With Inside Cranks, 156
With Overhanging Cranks, 154
Shaft-governor:
Analysis of Centrifugal, 385
Balancing Forces, 392
Inertia-forces in, 405
Kinematic Relations, 386
Reaction of the Valve-gear, 388
Reduction of Mass, 407
Regulation, 394
Various Forms of, 370
Shifting Eccentric, § 48; 193–202
Shifting-eccentric Valve-gear:
Moving the Eccentric-center, 193
Problems, 197
The Eccentric-pendulum, 195
The Shaft-governor, 194
Valve-Diagrams, 196
Side-clearance of Vanes, 576
Simple Eccentric-driven Valve, § 46; 175–188
Simplest Conditions in the Compound Engine, § 66; 438–449
Single-acting Engine, Westinghouse, 14, 84
Single-acting Tandem-compound Engine, 502
Single-impulse Turbines, Tests of, 654
Single-stage One-impulse Turbine, 518
Single-stage Turbines, Tests of, 653
Slides for Valve-rods, 297, 300
Snow Pumping-engine, 44
Diagrams from, 492
Governor, 428
Valve-gear, 320
Special Engine Mechanisms, 55
Special Forms of the Flat Valve, 266
Special Principles and Methods, § 62; 372–379
Specific Heat of Superheated Steam, 634
Speed, Effect of, upon Indicator Diagram, 201
Speed, Influence upon Engine-performance, 629, 642
Speed of Engines, 57
Speed of Turbine-vanes, 550
Speed-regulation by Governor, Variation of, 394
Stability of Governor, Conditions of, 411, 416
Static-pressure Cycle, 515
Stationary Engines, Classes of, 3
Large-sized, 27
Steam-action, in Engine and Turbine, 515
Steam-actuated Valves, 358
Steam-channel, Cross-area of, 577
Steam-cycle, Engine with Special (49)
Steam Diagrams, see Indicator Diagrams
Quality-curves, 485
Steam Distribution:
Curves of Valve-gear Performance
Effect of Lost Motion, 207
Effect of the Lead, 205
Equalizing Cut-offs, 210
Indicator Diagrams, 200
Shaft-governor Engine, 199
Symmetrical Admission, 198
Variation in Lead, 206
Varied by Shaft-governor, 193–202
Width of Port-opening, 197
Steam-hammers, Valve-gears for, 365
Steam-jacketing, Effect of, 454
Steam-jet:
Acoustic Vibrations, 570
Actual Flow, 563
Behavior in Vane-channel, 574
Deflection of, 539, 572
Diffuser Action, 571
Driving-force on Vane, 542
Energy-loss in the Nozzle, 571
Flow with Diverging Nozzle, 565
Formation of, 537
Impulse of, 537
Path of, 557
Reaction Experiments, 567
Steam-friction, 574
Velocity of Jet, Experiments on, 566
Steam-passages, Design of, 111
Steam Pumps, 38
Steam-pump Valve-gears, 355
Indicator Diagrams, 362
Steam-table, Supplement to, 662
Steam-test Tables, § 75; 600–629
See Tests of Engines and Turbines
Steam-tight Joints, 109
Steam-turbine:
Action of Jet, 537–543
Action of Vanes, 544–553
Balancing the Rotor, 582
Bearings, 583
Channel-form and Area, 555
Channel Variation in Multiple-pulse Stage, 580
Classification, 516

Digitized by Google

am-turbine:
Curtis, 525
Curves of Performance, 654–656
Deflection of Jet, 573
De Laval, 518
Design of Steam-channel, 577
Elektra, 531
Experiments on the Steam-jet, [563–572
Governor-action, 597
Governors and Valves, 592
Impulse and Reaction, 517
Kerr, 530
Leakage, 576
Limit of Performance, 558
Mixed Type, 535
Multiple-impulse, 524
Multiple-stage, One-impulse, 521
Net Performance, 561
Nozzles and Distributors, 587
Parsons, 531
Path of Jet, 557
Radial-flow, 530
Rateau, 523
Reaction Wheel, 549
Reversible, 535
Riedler-Stumpf, 528
Rotation Losses, 575
Side-clearance of Vanes, 576
Single-stage, One-impulse, 518
Speed-change, 550
Steam Friction, 574
Steam Jet, 563–572
Stuffing-boxes, 584
Sulzer, 534
Tangential-admission, 527
The Rotor, 581
Total Energy-loss, 577
Union, 536
Vanes or Blades, 591
Wear on Vanes, 591
Work-relations, 546, 556
Zoelly, 521
am-volume, Compound Engines, 463, 470
phenson Link-motion, § 50; 211–
ength of [220
ylinders, 106
istons, 120
iston-rods, 122
e Shaft, 161
Cylinder-walls, 107
ces:
, 128
, 584
534
Sulzer Turbine, Blading, 589
Stuffing-box, 566
Superheat, Diagrams from Compound Engine with, 488
Superheated Steam, Curves for Specific Heat, 634
Superheating, Effects of, in Engines, 650; in Turbines, 658
Supplement to Steam-table, 662
Sweet Governor, 194
Symmetrical Admission, 198

Tables of Tests, 600–629
See Tests of Engines and Turbines
Tangential-admission Wheel, 527
Tangye Engine-bed, 5, 61
Temperature of Feed-water, 635
Tests of Engines and Turbines, 601–629
Absolute Efficiency, 639
Conditions of Test, 602
Curtis Turbines, 655
Curves of Performance, Engines, 645–648; Turbines, 654–656
Effect of Jacket and Heaters, 648
Effect of Vacuum in Turbines, 656
Efficiency Data, 607
Expansion of Steam, 603, 632
General Condition, 602, 629
Heat-consumption, 605, 635
Horse-power and Steam-consumption, 633
Limit of Plant-efficiency, 640
Mechanical Efficiency, 606, 651
Parsons Turbines, 656
Performance per Pound of Steam, [605, 637
Pressures, 630, 643
Quality of Steam, 634
Regenerative Feed-heating, 636
Relative Efficiency, 641
Single-impulse Turbines, 654
Single-stage Turbines, 653
Speed, 629
Superheating, in Engines, 650; in Turbines, 658
Table-headings, 601–606
Temperature of Feed-water, 635
Unit of Steam-quantity, 639
Variation of Efficiency with Load, 644
Theoretical Diagrams for an Actual Engine, 455, 470
Theory of Turbine-action, 536
Thermodynamic Efficiency, Absolute, 639

Digitized by Google

Thermodynamic Efficiency, Relative, 641
Thermodynamic Process, Limit of, 558
Three Centers, Theorem of, 373
Throttling Governor, 422
Tod Blowing-engine, 36
Tod Rolling-mill Engine, 32
Triple-expansion Power Engines, 495
Triple-expansion Pumping-engines,
Turbines, see Steam-turbines [491
Two Eccentrics in Corliss Valve-gear,
Two-faced Flat Valve, 273 [318
Types of Engines:
Composite, 24
Corliss, 23
High-speed, 15
Types of Rotary Governors, § 61; [367–372
Types of Valves, 259
Types of Vane-action, 544

Union Turbine, 537

Vacuum, Effect of, in Turbines, 656
Value of the Volumetric Analysis (of Compound Engine), 475
Valves:
Adjustable Piston-valves, 277
Allen Type, 261, 268
Compound, 281
Corliss, Various Forms, 313
Dash-relief, Steam-pump, 357
Direct and Indirect, 186
Double, 286
Double-faced, Ball Design, 80
Flat, for Marine Engines, 262
For Superheated Steam, 276
For Turbines, 592
Gridiron, 329
Lift or Poppet, 97, 350
Locomotive, 260
Multiple-ported, Flat, 264; Piston, 281
Oscillating, 267
Piston, 81, 274
Piston-lift, 350
Poppet, see Lift
Positive and Negative, 252
Richardson Balanced, 77
Rider, Cut-off, 288
Special Forms, Flat, 266
Solid Piston, 276
Steam-actuated, 358
Tandem Locomotive, 284
The B Valve, 266
Valves:
Two-faced Flat, 273
Types of, 259
Van den Kerchove, 350
Vauclain Locomotive, 2-crank, 8; 4-crank, 282
Willans, Central, 285
Valves, Balancing Devices for:
American, 260
Marine-engine Relief-rings, 272
Richardson, 77
Two-faced Flat Valve, 273
Valve-action:
Effect of, in Compound Engine, In Corliss Gear, 309 [459, 469
Valve-action, Secondary Effects:
Effect of Eccentric-rod, 202, 205
Effect of Lost Motion, 207
Non-central Stroke-line, 208
Variation in Lead, 206
Valve-arrangements:
Ball, Two-faced, 80
Buckeye, 82
Corliss, 90
Corliss, in Cylinder-heads, 98
Four-valve, Watertown, 79
Lift-valve Cylinder, 97
McIntosh & Seymour, 94
Types of, 78
Westinghouse Compound, 84
Wheelock, 96
Valve-balancing, 269
Valve-diagrams:
Angle of Advance, 184
Corliss Gear, 309–311
Developed Diagrams, 184
For the Link-motion, 219
Geometrical Proofs, 188
Geometrical Relations, 190
Lap, Lead, and Angle of Advance, Reuleaux, 176 [184
Rules for Drawing, 178
Shaft-governor, 196, 198
Simple Problems, 191
The Complete Diagram, 178
The Valve-ellipse, 182
Valve and Piston Diagram, 181
Zeuner, 177
Valve-gear, Reaction of, upon Governor:
Inertia, 389
Valve-resistance, 390
Valve-gear Details, § 55; 288–301
Corliss Releasing Mechanism, 295
Eccentrics, 288

Digitized by Google

alve-gear Details:
Eccentric-straps, 292
Link-motion Details, 298
Rockers and Slides, 296
Rods, 292
Unhooking Devices for Valve-rods,
alve-gear Performance, 201 [327
alve-gear Problems, § 47; 188–193
alve-gears:
Ball Four-valve, 336
Cameron Steam-pump, 358
Cam-gears for Lift-valves, 352–355
Corliss, 301. See Corliss Valve-gear
Corliss, with Moving Trip-cams,
Deane Steam-pump, 359 [320
Double-valve Gears, 249
Duplex Steam-pump, 355
Fleming, 334
For Steam-hammers, 364
Greene, 329
Joy Gear, 244
Lift-valve Gear, General Form, 350
Linkage Gears, for Lift-valves, 353
McIntosh & Seymour, 338
Meyer Gear, 249
Porter-Allen, 332
Radial Gears, 241
Self-centering, 365
Snow Pumping-engine Gear, 320
Steam-pump Gears, 355
Stephenson Link-motion, 211
The Gab-motion, 211
The Shifting Eccentric, 193
Walschaert Gear, 241
Westinghouse Air-brake Pump,
Wheelock, 331 [360
Without Crank-shaft, 355
Valve-gears for Engines which have no Crank-shaft, § 60; 355–366
Valve-movement:
Ball Four-valve Gear, 338
Center of Movement, 203
Diagrams for, 176–184
Duplex Steam-pump, 357
Effect of Reversing Rocker-arm, 187
Effect of the Eccentric-rod, 202
Engine with Separate Stroke-lines, 187
Equalizing the Cut-offs, 210
Exact Reuleaux Diagram, 204
Fleming Gear, 336
In the Link-motion, 218
Valve-movement:
Lost Motion, 207
McIntosh & Seymour Gear, 340–346
Non-central Stroke-line, 208
Non-harmonic, in Corliss Gear, 301, 307
Relative, in Double-valve Gears,
Valve Proportioning, 267 [250
Valve-resistance, 390
Valve-setting, 191, 312, 357
Van den Kerchove Valves, 350
Vanes or Blades, 588
Driving-force on, 542
Form and Speed, 550
Side-clearance, 576
Wear on, 591
Work on, 546
Vane-action,
Types of, 542
Speed-change, 551
Variable Steam Distribution, § 48; 193–202
Variation in the Running-speed, 550
Variation in the Steam-volume, 463, 470
Variation of Efficiency with Load,
Engines, 644
Turbines, 654
Various Cylinder-arrangements, 511
Various Forms of the Corliss Valve, 313; of Valve-gear, 316
Various Forms of the Slide-valve, § 54; 259–288
Various Special Regulators, § 65; 421–434
Vauclain Compound Locomotive, 85, 282
Velocity-diagrams for the Turbine, 545, 547, 556
Velocity of the Jet, 566
Vertical Stationary Engines, Frames for, 65
Virtual Eccentric, 251, 256
Virtual Velocity, 373
Volume-diagrams, Compound Engines, 463, 470

Walschaert Valve Gear, 241
Westinghouse Air-brake Pump,
Indicator Diagrams, 363
Valve-gear, 360
Westinghouse Compound Engine, 14,
Westinghouse Governor, 371 [84
Westinghouse-Parsons Turbine, 533

Digitized by Google

Westinghouse-Parsons Turbine:
Bearing, 594
Blading, 591
Governor and Valve, 593
Stuffing-box, 596
Wheelock Cylinder, 96
Valve-gear, 331
Wheels, see Fly-wheels, 169
Width of Port-opening, 197
Williams Central-valve Engine, 285
Work-division in the Compound Engine, 440, 445, 454
Work on the Vanes, 546
Work-relations in the Compound Turbine, 556
Worthington Pumping-engine, 40, 42
Steam Diagrams, 483, 484
Wrist-pin, The, 141
Wrist-plate Effect, in Valve-gear, [illegible]
Wrist-plate, Motion of, 301 [illegible]

Zeuner Valve-diagram, 177
Zoelly Turbine, 521
Blading, 587, 589

Digitized by Google

Digitized by Google

Digitized by Google

D. VAN NOSTRAND COMPANY

25 PARK PLACE

NEW YORK

SHORT-TITLE CATALOG

OF

Publications and Importations

OF

SCIENTIFIC AND ENGINEERING BOOKS

This list includes

the technical publications of the following English publishers:

SCOTT, GREENWOOD & CO. JAMES MUNRO & CO., Ltd.
CONSTABLE & COMPANY, Ltd. TECHNICAL PUBLISHING CO.
BENN BROTHERS, Ltd.

for whom D Van Nostrand Company are American agents.

Digitized by Google

SHORT-TITLE CATALOG

OF THE

Publications and Importations

OF

D. VAN NOSTRAND COMPANY

25 PARK PLACE, N. Y.

All Prices in this list are NET.
All bindings are in cloth unless otherwise noted.

Abbott, A. V. The Electrical Transmission of Energy.....8vo, *$5 00
—— **A Treatise on Fuel**.....16mo, 0 75
—— **Testing Machines**.....16mo, 0 75
Abraham, Herbert. Asphalts and Allied Substances.....8vo, 5 00
Adam, P. Practical Bookbinding.....12mo, 2 50
Adams, H. Theory and Practice in Designing.....8vo, *2 50
Adams, H. C. Sewage of Sea Coast Towns.....8vo, *2 50
Adams, J. W. Sewers and Drains for Populous Districts.....8vo, 2 50
Addyman, F. T. Practical X-Ray Work.....8vo, 5 00
Adler, A. A. Theory of Engineering Drawing.....8vo, 2 50
—— **Principles of Parallel Projecting-line Drawing**.....8vo, 1 25
Aikman, C. M. Manures and the Principles of Manuring.....8vo,
(Reprinting.)
Aitken, W. Manual of the Telephone.....8vo, *8 00
d'Albe, E. E. F. Contemporary Chemistry.....12mo, 1 50
Alexander, J. Colloid Chemistry.....12mo, 1 00
Allan, W. Strength of Beams Under Transverse Loads.....16mo, 0 75
—— **Theory of Arches**.....16mo,
Allen, H. Modern Power Gas Producer Practice and Applications 12mo,
(Reprinting.)
Anderson, J. W. Prospector's Handbook.....12mo, 1 75
Andés, L. Vegetable Fats and Oils.....8vo, *6 00
—— **Animal Fats and Oils**.....8vo, 5 00
—— **Drying Oils, Boiled Oil, and Solid and Liquid Driers**.....8vo, *6 00
—— **Iron Corrosion, Anti-fouling and Anti-corrosive Paints**.....8vo, 6 00
—— **Oil Colors, and Printers' Ink**.....8vo, 4 00
—— **Treatment of Paper for Special Purposes**.....12mo, 3 00
Andrews, E. S. Reinforced Concrete Construction.....12mo, *2 00
—— **Theory and Design of Structures**.....8vo, *3 50
—— **Further Problems in the Theory and Design of Structures**.....8vo, *2 50
—— **The Strength of Materials**.....8vo, *4 00
—— **Elastic Stresses in Structures**.....8vo, 5 00
Andrews, E. S., and Heywood, H. B. The Calculus for Engineers.....12mo, *1 00
Annual Reports on the Progess of Chemistry. Fifteen Volumes now ready. Vol. I., 1904, Vol. XV., 1919.....8vo, each, 2 00
Argand, M. Imaginary Quantities.....16mo, 0 75
Armstrong, R., and Idell, F. E. Chimneys for Furnaces and Steam Boilers.
16mo, 0 75

Digitized by Google

nold, E. Armature Windings of Direct-Current Dynamos.....8vo, 2 00
:h, W., and Asch, D. The Silicates in Chemistry and Commerce.8vo, 7 50
ıe, S. W., and Keiley, J. D. Electric Railways. Theoretically and Practically Treated. Vol. I. Rolling Stock.....12mo, *2 50
ıe, S. W. Electric Railways. Vol. II. Engineering Preliminaries and Direct Current Sub-Stations.....12mo, *2 50
– Electricity: Experimentally and Practically Applied.....12mo, *2 00
ıley, R. H. Chemical Calculations.....12mo, 2 50
ins, W. Common Battery Telephony Simplified.....12mo, *1 25
inson, A. A. Electrical and Magnetic Calculations.....8vo, *1 50
:inson, J. J. Friction of Air in Mines.....16mo, 0 75
inson, J. J., and Williams, Jr., E. H. Gases Met with in Coal Mines. 16mo, 0 75
inson, P. The Elements of Electric Lighting.....12mo, 1 50
– The Elements of Dynamic Electricity and Magnetism.....12mo, 2 00
hincloss, W. S. Link and Valve Motions Simplified.....8vo, *1 50
ley, J. A. Silica and the Silicates.....8vo (*In Press.*)
tin, E. Single Phase Electric Railways.....4to, *5 00
tin and Cohn. Pocketbook of Radiotelegraphy.....(*In Press.*)
ton, H. The Electric Arc.....8vo, 5 50

, W. E. Sale of Inventions.....12mo (*In Press.*)
ey, R. D. The Brewers' Analyst.....8vo, *5 00
er, A. L. Quaternions.....8vo, 1 50
· Thick-Lens Optics.....12mo, *1 50
er, Benj. Pressure of Earthwork.....16mo,
er, G. S. Ship Form, Resistance and Screw Propulsion.....8vo, *4 50
er, I. O. Levelling.....16mo, 0 75
er, M. N. Potable Water.....16mo, 0 75
Sewerage and Sewage Purification.....16mo, 0 75
er, T. T. Telegraphic Transmission of Photographs.....12mo, (*Reprinting.*)
, G. R. Modern Iron Foundry Practice. 12mo.
Vol. I. Foundry Equipment, Materials Used..... *3 00
J. W. Concrete Structures in Railways.....8vo, *2 50
R. S. Popular Guide to the Heavens.....8vo, *5 00
Natural Sources of Power.....8vo, 2 50
W. V. Law Affecting Engineers.....8vo, *3 50
:son, Lloyd. Slide Valve Diagrams.....16mo, 0 75
am, G. B. Development of the Incandescent Electric Lamp..8vo, 2 50
er, A. F. Textiles and Their Manufacture.....8vo, 2 50
er, A. F., and Midgley, E. Analysis of Woven Fabrics.....8vo, 3 50
er, A. H. Graphic Methods of Engine Design.....12mo, 2 00
Heating and Ventilation.....4to, 9 00
ard, J. H. The Naval Militiaman's Guide.....16mo, leather 1 00
ard, Major J. G. Rotary Motion.....16mo, 0 75
es, J. B. Elements of Military Sketching.....16mo. *0 75
ett, E. deB. Coal-Tar Dyes and Intermediates.....8vo, 3 50
Explosives, Matches and Pyrotechny.....8vo (*In Press.*)
Synthetic Dyes.....8vo (*In Press.*)
weil, M., and Carr, F. H. Organic Medicinal Chemicals..8vo, (*In Press.*)

Digitized by Google

Barrus, G. H. Engine Tests.....8vo, *4 00
Baterden, J. R. Timber.....8vo, *2 50
Bates, E. L., and Charlesworth, F. Practical Mathematics and Geometry.....12mo,
Part I. Preliminary Course..... 1 00
Part II. Elementary Course..... 1 00
Part III. Advanced Course..... 1 50
—— Practical Mathematics.....12mo, *2 00
—— Practical Geometry and Graphics.....12mo, 2 00
Batey, J. The Science of Works Management.....12mo, *2 00
—— Steam Boilers and Combustion.....12mo, *2 00
Bayonet Training Manual.....16mo, 0 30
Beadle, C. Chapters on Papermaking. Five Volumes.....12mo, each, *2 00
Beaumont, R. Color in Woven Design.....8vo, *6 00
—— Finishing of Textile Fabrics.....8vo, *5 00
—— Standard Cloths.....8vo, *6 00
Beaumont, W. W. The Steam-Engine Indicator.....8vo, 2 50
Bechhold, H. Colloids in Biology and Medicine.....8vo, 5 00
Beckwith, A. Pottery.....8vo, paper, 0 60
Bedell, F. Airplane Characteristics.....8vo, 1 50
—— The Air Propeller.....8vo, 1 00
—— The Airplane.....8vo (*In Press.*)
Bedell, F., and Pierce, C. A. Direct and Alternating Current Manual. 8vo, 2 00
Beech, F. Dyeing of Cotton Fabrics.....8vo, 5 00
—— Dyeing of Woolen Fabrics.....8vo, *3 50
Beggs, G. E. Stresses in Railway Girders and Bridges.....(*In Press.*)
Begtrup, J. The Slide Valve.....8vo, *2 00
Bender, C. E. Continuous Bridges.....16mo, 0 75
—— Proportions of Pins Used in Bridges.....16mo, 0 75
Bengough, G. D. Brass.....(*In Press.*)
Bennett, H. G. The Manufacture of Leather.....8vo, 6 00
—— Animal Proteids.....8vo, (*In Press.*)
Bernthsen, A. A Text-book of Organic Chemistry.....12mo, 3 50
Bersch, J. Manufacture of Mineral and Lake Pigments.....8vo, 6 00
Beveridge, J. Papermaker's Pocket Book.....12mo, *4 00
Binnie, Sir A. Rainfall Reservoirs and Water Supply.....8vo, 4 00
Binns, C. F. Manual of Practical Potting.....8vo, 6 00
—— The Potter's Craft.....12mo, *2 00
Birchmore, W. H. Interpretation of Gas Analysis.....12mo, *1 25
Blaine, R. G. The Calculus and Its Applications.....12mo, 1 50
Blake, W. H. Brewers' Vade Mecum.....8vo, *4 00
Blanchard, W. M. Laboratory Exercises in General Chemistry.....12mo, 1 00
Blasdale, W. C. Quantitative Chemical Analysis.....12mo, 2 00
Bloch, L. Science of Illumination.....8vo, 3 00
Blyth, A. W. Foods: Their Composition and Analysis.....8vo, 7 50
—— Poisons: Their Effects and Detection.....8vo, 3 00
Böckmann, F. Celluloid.....12mo, *2 50
Bodmer, G. R. Hydraulic Motors and Turbines.....12mo, 5 00
Boileau, J. T. Traverse Tables.....8vo, 5 00
Bonney, G. E. The Electro-platers' Handbook.....

Digitized by Google

Booth, N. Guide to the Ring-spinning Frame	12mo,	*2 00
Booth, W. H. Water Softening and Treatment	8vo (*Reprinting.*)	
—— Superheaters and Superheating and Their Control	8vo,	*1 50
Bottcher, A. Cranes: Their Construction, Mechanical Equipment and Working	4to (*Reprinting.*)	
Bottler, M. Modern Bleaching Agents	12mo,	2 50
Bottone, S. R. Magnetos for Automobilists	12mo,	*1 00
—— Electro-Motors, How Made and How Use	12mo,	1 00
Boulton, S. B. Preservation of Timber	16mo,	0 75
Bourcart, E. Insecticides, Fungicides and Weedkillers	8vo,	*6 00
Bourgougnon, A. Physical Problems	16mo,	0 75
Bourry, E. Treatise on Ceramic Industries	8vo,	6 00
Bowie, A. J., Jr. A Practical Treatise on Hydraulic Mining	8vo,	5 00
Bowls, O. Tables of Common Rocks	16mo,	0 75
Bowser, E. A. Elementary Treatise on Analytic Geometry	12mo,	1 75
—— Elementary Treatise on the Differential and Integral Calculus	12mo,	2 25
—— Elementary Treatise on Analytic Mechanics	12mo,	3 00
—— Elementary Treatise on Hydro-mechanics	12mo,	2 50
—— A Treatise on Roofs and Bridges	12mo,	*2 25
Boycott, G. W. M. Compressed Air Work and Diving	8vo,	*4 25
Bradford, G. Whys and Wherefores of Navigation	12mo,	2 00
—— Sea Terms and Phrases	12mo, fabrikoid (*In Press.*)	
Bragg, E. M. Design of Marine Engines and Auxiliaries	8vo,	4 00
Brainard, F. R. The Sextant	16mo,	
Brassey's Naval Annual for 1919	8vo,	10 00
Briggs, R., and Wolff, A. R. Steam-Heating	16mo,	0 75
Bright, C. The Life Story of Sir Charles Tilson Bright	8vo,	*4 50
—— Telegraphy, Aeronautics and War	8vo,	6 00
Brislee, T. J. Introduction to the Study of Fuel	8vo (*Reprinting.*)	
Broadfoot, S. K. Motors: Secondary Batteries	12mo,	0 75
Broughton, H. H. Electric Cranes and Hoists		
Brown, G. Healthy Foundations	16mo,	0 75
Brown, H. Irrigation	8vo (*Reprinting.*)	
Brown, H. Rubber	8vo,	2 50
—— W. A. Portland Cement Industry	8vo,	3 00
Brown, Wm. N. Dipping, Burnishing, Lacquering and Bronzing Brass Ware	12mo,	*1 50
—— Handbook on Japanning	12mo,	*2 00
Brown, Wm. N. The Art of Enamelling on Metal	12mo,	*2 00
—— House Decorating and Painting	12mo,	*2 00
—— History of Decorative Art	12mo	*0 50
—— Workshop Wrinkles	8vo,	*1 00
Browne, C. L. Fitting and Erecting of Engines	8vo,	*1 50
Browne, R. E. Water Meters	16mo,	0 75
Bruce, E. M. Detection of Common Food Adulterants	12mo,	1 40
Brunner, R. Manufacture of Lubricants, Shoe Polishes and Leather Dressings	8vo,	3 50
Buel, R. H. Safety Valves	16mo,	0 75
Bunkley, J. W. Military and Naval Recognition Book	16mo,	1 00
Burley, G. W. Lathes. Their Construction and Operation	12mo,	2 00
—— Machine and Fitting Shop Practice. 2 vols	12mo, each,	2 00
—— Testing of Machine Tools	12mo,	2 00
Burnside, W. Bridge Foundat	12mo,	*2 00

Digitized by Google

Burstall, F. W. Energy Diagram for Gas. With Text....8vo, 1 50
—— Diagram. Sold separately.... *1 00
Burt, W. A. Key to the Solar Compass....16mo, leather, 2 50
Buskett, E. W. Fire Assaying....12mo, *1 25
Butler, H. J. Motor Bodies and Chassis....8vo, *3 00
Byers, H. G., and Knight, H. G. Notes on Qualitative Analysis....8vo,
(*New Edition in Preparation.*)

Cain, W. Brief Course in the Calculus....12mo, *1 75
—— Elastic Arches....16mo, 0 75
—— Maximum Stresses....16mo, 0 75
—— Practical Designing Retaining of Walls....16mo, 0 75
—— Theory of Steel-concrete Arches and of Vaulted Structures. 16mo, 0 75
—— Theory of Voussoir Arches....16mo, 0 75
—— Symbolic Algebra....16mo, 0 75
Calvert, G. T. The Manufacture of Sulphate of Ammonia and Crude Ammonia....12mo, 4 00
Camm, S. Aeroplane Construction....12mo, 3 00
Carhart, H. S. Thermo Electromotive Force in Electric Cells,
(*In Press.*)
Carey, A. E., and Oliver, F. W. Tidal Lands....8vo, 5 00
Carpenter, F. D. Geographical Surveying....16mo,
Carpenter, R. C., and Diederichs, H. Internal Combustion Engines.8vo, 5 50
Carter, H. A. Ramie (Rhea), China Grass....12mo, *3 00
Carter, H. R. Modern Flax, Hemp, and Jute Spinning....8vo, *3 50
—— Bleaching, Dyeing and Finishing of Fabrics....8vo, *1 25
Cary, E. R. Solution of Railroad Problems with the Slide Rule..16mo, *1 00
Casler, M. D. Simplified Reinforced Concrete Mathematics....12mo, *1 00
Cathcart, W. L. Machine Design. Part I. Fastenings....8vo, *3 00
Cathcart, W. L., and Chaffee, J. I. Elements of Graphic Statics...8vo, *3 00
—— Short Course in Graphics....12mo, 1 50
Caven, R. M., and Lander, G. D. Systematic Inorganic Chemistry.12mo, 2 25
Chalkley, A. P. Diesel Engines....8vo, *4 00
Chalmers, T. W. The Production and Treatment of Vegetable Oils, 4to, 7 50
Chambers' Mathematical Tables....8vo, 2 50
Chambers, G. F. Astronomy....16mo, *1 50
Chappel, E. Five Figure Mathematical Tables....8vo, 2 50
Charnock, Mechanical Technology....8vo, 3 50
Charpentier, P. Timber....8vo, *6 00
Chatley, H. Principles and Designs of Aeroplanes....16mo, 0 75
—— How to Use Water Power....12mo, *1 50
—— Gyrostatic Balancing....8vo, *1 25
Child, C. D. Electric Arc....8vo, *2 00
Christian, M. Disinfection and Disinfectants....12mo, 2 50
Christie, W. W. Boiler-waters, Scale, Corrosion, Foaming....8vo, *3 00
—— Chimney Design and Theory....8vo, *3 00
—— Furnace Draft....16mo, 0 75
—— Water: Its Purification and Use in the Industries....8vo, *2 00
Church's Laboratory Guide....8vo, 2 50
Clapham, J. H. Woolen and Worsted Industries....8vo, 2 00

Digitized by Google

Clapperton, G. Practical Papermaking.....8vo (*Reprinting.*)

Clark, A. G. Motor Car Engineering.
Vol. I. Construction..... *4 00
Vol. II. Design 8vo, *3 50

Clark, C. H. Marine Gas Engines. New Edition..... 2 00

Clarke, J. W., and Scott, W. Plumbing Practice.
Vol. I. Lead Working and Plumbers' Materials.....8vo, *4 00
Vol. II. Sanitary Plumbing and Fittings.....(*In Press.*)
Vol. III. Practical Lead Working on Roofs.....(*In Press.*)

Clarkson, R. P. Elementary Electrical Engineering (*In Press.*)

Clerk, D., and Idell, F. E. Theory of the Gas Engine.....16mo, 0 75

Clevenger, S. R. Treatise on the Method of Government Surveying. 16mo, morocco, 2 50

Clouth, F. Rubber, Gutta-Percha, and Balata.....8vo, *6 00

Cochran, J. Concrete and Reinforced Concrete Specifications.....8vo, *2 50

—— Treatise on Cement Specifications.....8vo, *1 00

Cocking, W. C. Calculations for Steel-Frame Structures.....12mo, *2 50

Coffin, J. H. C. Navigation and Nautical Astronomy.....12mo, 3 00

Colburn, Z., and Thurston, R. H. Steam Boiler Explosions....16mo, 0 75

Cole, R. S. Treatise on Photographic Optics.....12mo, 2 00

Coles-Finch, W. Water, Its Origin and Use.....8vo, *5 00

Collins, C. D. Drafting Room Methods, Standards and Forms.....8vo, 2 00

Collins, S. Hoare. Plant Products and Chemical Fertilizers.....8vo, 3 00

Collis, A. G. High and Low Tension Switch-Gear Design.....8vo, *3 50

—— Switchgear 12mo, 0 50

Colver, E. D. S. High Explosives.....8vo, 12 50

Comstock, D. F., and Troland, L. T. The Nature of Electricity and Matter 8vo, 2 50

Coombs, H. A. Gear Teeth.....16mo, 0 75

Cooper, W. R. Primary Batteries.....8vo, *6 00

Copperthwaite, W. C. Tunnel Shields.....4to, *9 00

Corfield, W. H. Dwelling Houses.....16mo, 0 75

—— Water and Water-Supply.....16mo, 0 75

Cornwall, H. B. Manual of Blow-pipe Analysis.....8vo. *2 50

Cowee, G. A. Practical Safety Methods and Devices.....8vo, 4 00

Cowell, W. B. Pure Air, Ozone, and Water.....12mo, *2 50

Craig, J. W., and Woodward, W. P. Questions and Answers About Electrical Apparatus.....12mo, leather, 1 50

Craig, T. Motion of a Solid in a Fuel.....16mo, 0 75

—— Wave and Vortex Motion.....16mo, 0 75

Crehore, A. C. Mystery of Matter and Energy.....8vo, 1 00

—— New Theory of the Atom.....(*In Press.*)

Crocker, F. B., and Arendt, M. Electric Motors.....8vo, *2 50

Crocker, F. B., and Wheeler, S. S. The Management of Electrical Machinery.....12mo, *1 00

Crosby, E. U., Fiske, H. A., and Forster, H. W. Handbook of Fire Protection.....12mo, 4 00

Cross, C. F., Bevan, E. J., and Sindall, R. W. Wood Pulp and Its Uses .....8vo (*Reprinting.*)

Crosskey, L. R. Elementary Perspective.....8vo, 1 50

Digitized by Google

Crosskey, L. R., and Thaw, J. Advanced Perspective.....8vo, 2 00
Culley, J. L. Theory of Arches.....16mo, 0 75
Cushing, H. C., Jr., and Harrison, N. Central Station Management... *2 00

Dadourian, H. M. Analytical Mechanics.....12mo, *3 00
——Graphic Statics.....8vo, 0 75
Danby, A. Natural Rock Asphalts and Bitumens.....8vo, *2 50
Darling, E. R. Inorganic Chemical Synonyms.....12mo, 1 00
Davenport, C. The Book.....8vo, 2 00
Davey, N. The Gas Turbine.....8vo, *4 00
Davies, F. H. Electric Power and Traction.....8vo, *2 00
——Foundations and Machinery Fixing.....16mo, 1 00
Deerr, N. Sugar Cane.....8vo, 10 00
De la Coux, H. The Industrial Uses of Water.....8vo, 5 00
Del Mar, W. A. Electric Power Conductors.....8vo, *2 00
Denny, G. A. Deep-level Mines of the Rand.....4to, *10 00
De Roos, J. D. C. Linkages.....16mo, 0 75
Derr, W. L. Block Signal Operation.....Oblong 12mo, *1 50
Desaint, A. Three Hundred Shades and How to Mix Them.....8vo, *9 00
De Varona, A. Sewer Gases.....16mo, 0 75
Devey, R. G. Mill and Factory Wiring.....12mo, 1 00
Dichmann, Carl. Basic Open-Hearth Steel Process.....12mo, 4 00
Dieterich, K. Analysis of Resins, Balsams, and Gum Resins....8vo, *3 50
Dilworth, E. C. Steel Railway Bridges.....4to. *4 00
Dinger, Lieut. H. C. Care and Operation of Naval Machinery...12mo, *3 00
Dixon, D. B. Machinist's and Steam Engineer's Practical Calculator. 16mo, morocco, 1 25
Dommett, W. E Motor Car Mechanism.....12mo, *2 00
Dorr, B. F. The Surveyor's Guide and Pocket Table-book. 16mo, morocco, 2 00
Draper, C. H. Heat and the Principles of Thermo-Dynamics..12mo, 2 25
Draper, E. G. Navigating the Ship.....12mo, 2 00
Dubbel, H. High Power Gas Engines.....8vo, *5 00
Dumesny, P., and Noyer, J. Wood Products, Distillates, and Extracts. 8vo, *5 00
Duncan, W. G., and Penman, D. The Electrical Equipment of Collieries. 8vo, *5 00
Dunkley, W. G. Design of Machine Elements. Two volumes..8vo,each, 2 00
Dunstan, A. E., and Thole, F. B. T. Textbook of Practical Chemistry. 12mo,
Durham, H. W. Saws.....
Duthie, A. L. Decorative Glass Processes.....
Dwight, H. B. Transmission Line Formulas.....
Dyke, A. L. Dyke's Automobile and Gasoline Engine
Dyson, S. S. A Manual of Chemical Plant. 12 parts.
Dyson, S. S., and Clarkson, S. S. Chemical Works.
Eccles, W. H. Wireless Telegraphy and Telephony.

Digitized by Google

Eck, J. Light, Radiation and Illumination....8vo, 2 50
Eddy, L. C. Laboratory Manual of Alternating Currents....12mo, 0 50
Edelman, P. Inventions and Patents....12mo, *1 50
Edgcumbe, K. Industrial Electrical Measuring Instruments....8vo, 5 00
Edler, R. Switches and Switchgear....8vo, 4 00
Eissler, M. The Metallurgy of Gold....8vo, 9 00
—— The Metallurgy of Silver....8vo, 4 00
—— The Metallurgy of Argentiferous Lead....8vo, 6 25
—— A Handbook on Modern Explosives....8vo, 5 00
Ekin, T. C. Water Pipe and Sewage Discharge Diagrams....folio, *3 00
Electric Light Carbons, Manufacture of....8vo, 1 00
Eliot, C. W., and Storer, F. H. Compendious Manual of Qualitative Chemical Analysis....12mo, *1 25
Ellis, C. Hydrogenation of Oils....8vo, 7 50
—— Ultraviolet Light, Its Applications in Chemical Arts....12mo, (*In Press*)
—— and Meigs, J. V. Gasolene and Other Motor Fuels..(*In Press.*)
Ellis, G. Modern Technical Drawing....8vo, *2 00
Ennis, Wm. D. Linseed Oil and Other Seed Oils....8vo, 5 00
—— Applied Thermodynamics....8vo, 5 00
—— Flying Machines To-day....12mo, *1 50
—— Vapors for Heat Engines....12mo, *1 00
Ermen, W. F. A. Materials Used in Sizing....8vo, *2 00
Erwin, M. The Universe and the Atom....12mo (*Reprinting.*)
Ewing, A. J. Magnetic Induction in Iron....8vo, 5 00

Fairchild, J. F. Graphical Compass Conversion Chart and Tables... 0 50
Fairie, J. Notes on Lead Ores....12mo, *0 50
—— Notes on Pottery Clays....12mo, *2 00
Fairley, W., and Andre, Geo. J. Ventilation of Coal Mines....16mo, 0 75
Fairweather, W. C. Foreign and Colonial Patent Laws....8vo, *3 00
Falk, K. G. Chemical Reactions: Their Theory and Mechanism. (*In Press.*)
Fanning, J. T. Hydraulic and Water-supply Engineering....8vo, *5 00
Farnsworth, P. V. Shop Mathematics....12mo (*In Press.*)
Fay, I. W. The Coal-tar Dyes....8vo, 5 00
Fernbach, R. L. Glue and Gelatine....8vo, *3 00
Findlay, A. The Treasures of Coal Tar....12mo, 2 00
Firth, J. B. Practical Physical Chemistry....12mo, 1 25
Fischer, E. The Preparation of Organic Compounds....12mo, 1 50
Fisher, H. K. C., and Darby, W. C. Submarine Cable Testing...8vo, 4 00
Fleischmann, W. The Book of the Dairy....8vo, 4 50
Fleming, J. A. The Alternate-current Transformer. Two Volumes. 8vo.
Vol. I. The Induction of Electric Currents.... *6 50
Vol, II. The Utilization of Induced Currents.... 6 50
—— Propagation of Electric Currents....8vo, 3 50
—— A Handbook for the Electrical Laboratory and Testing Room. Two Volumes....8vo, each, *6 50
Fleury, P. Preparation and Uses of White Zinc Paints....8vo, 3 00
Flynn, P. J. Flow of Water....12mo, 0 75
—— Hydraulic Tables....16mo, 0 75

Digitized by Google

Foster, H. A. Electrical Engineers' Pocket-book. (*Seventh Edition.*) 12mo, leather, 5 00
—— Engineering Valuation of Public Utilities and Factories. 8vo, *3 00
Fowle, F. F. Overhead Transmission Line Crossings. 12mo, *1 50
—— The Solution of Alternating Current Problems. 8vo (*In Press.*)
Fox, W. G. Transition Curves. 16mo, 0 75
Fox, W., and Thomas, C. W. Practical Course in Mechanical Drawing. 12mo, 1 25
Foye, J. C. Chemical Problems. 16mo, 0 75
—— Handbook of Mineralogy. 16mo, 0 75
Francis, J. B. Lowell Hydraulic Experiments. 4to, 15 00
Franzen, H. Exercises in Gas Analysis. 12mo, *1 00
Fraser, E. S., and Jones, R. B. Motor Vehicles and Their Motors, 8vo, fabrikoid, 2 00
Freudemacher, P. W. Electric Mining Installations. 12mo, 1 00
Friend, J. N. The Chemistry of Linseed Oil. 12mo, 1 00
Fritsch, J. Manufacture of Chemical Manures. 8vo, 5 00
Frye, A. I. Civil Engineers' Pocket-book. 12mo, leather, *5 00
Fuller, G. W. Investigations into the Purification of the Ohio River. 4to, *10 00
Furnell, J. Paints, Colors, Oils, and Varnishes. 8vo.

Gant, L. W. Elements of Electric Traction. 8vo, *2 50
Garcia, A. J. R. V. Spanish-English Railway Terms. 8vo, 3 00
Gardner, H. A. Paint Researches, and Their Practical Applications, 8vo, *5 00
Garforth, W. E. Rules for Recovering Coal Mines after Explosions and Fires. 12mo, leather, 1 50
Garrard, C. C. Electric Switch and Controlling Gear. 8vo, *6 00
Gaudard, J. Foundations. 16mo, 0 75
Gear, H. B., and Williams, P. F. Electric Central Station Distribution Systems. 8vo, *3 50
Geerligs, H. C. P. Cane Sugar and Its Manufacture. 8vo, *6 00
—— Chemical Control in Cane Sugar Factories. 4to, 5 00
Geikie, J. Structural and Field Geology. 8vo, 4 50
—— Mountains. Their Growth, Origin and Decay. 8vo, 4 50
—— The Antiquity of Man in Europe. 8vo, *3 00
Georgi, F., and Schubert, A. Sheet Metal Working. 8vo, 3 50
Gerhard, W. P. Sanitation, Watersupply and Sewage Disposal of Country Houses. 12mo, *2 00
—— Gas Lighting. 16mo, 0 75
—— Household Wastes. 16mo, 0 75
—— House Drainage. 16mo, 0 75
—— Sanitary Drainage of Buildings. 16mo, 0 75
Gerhardi, C. W. H. Electricity Meters. 8vo, *7 00
Geschwind, L. Manufacture of Alum and Sulphates. 8vo, 5 00
Gibbings, A. H. Oil Fuel Equipment for Locomotives. 8vo. (*Reprinting.*)
Gibbs, W. E. Lighting by Acetylene. 12mo, *1 50

Digitized by Google

Gibson, A. H. Hydraulics and Its Application....8vo, 6 00
—— Water Hammer in Hydraulic Pipe Lines....12mo, 2 50
Gibson, A. H., and Ritchie, E. G. Circular Arc Bow Girder....4to, *3 50
Gilbreth, F. B. Motion Study....12mo, *2 00
—— Primer of Scientific Management....12mo, *1 00
Gillmore, Gen. Q. A. Roads, Streets, and Pavements....12mo, 1 25
Godfrey, E. Tables for Structural Engineers....16mo, leather, *2 50
Golding, H. A. The Theta-Phi Diagram....12mo, *2 00
Goldschmidt, R. Alternating Current Commutator Motor....8vo, *3 00
Goodchild, W. Precious Stones....8vo, 2 50
Goodell, J. M. The Location, Construction and Maintenance of Roads....8vo, 2 00
Goodeve, T. M. Textbook on the Steam-engine....12mo, 2 50
Gore, G. Electrolytic Separation of Metals....8vo, 4 50
Gould, E. S. Arithmetic of the Steam-engine....12mo, 1 00
—— Calculus....16mo, 0 75
—— High Masonry Dams....16mo, 0 75
Gould, E. S. Practical Hydrostatics and Hydrostatic Formulas....16mo, 0 75
Gratacap, L. P. A Popular Guide to Minerals....8vo, *2 00
Gray, H. H. Gas-Works Products....8vo (*In Press.*)
Gray, J. Electrical Influence Machines....12mo, 2 00
—— Marine Boiler Design....12mo (*Reprinting.*)
Greenhill, G. Dynamics of Mechanical Flight....8vo, *2 50
Greenwood, H. C. The Industrial Gases....8vo (*In Press.*)
Gregorius, R. Mineral Waxes....12mo, 3 00
Grierson, R. Some Modern Methods of Ventilation....8vo, *3 00
Griffiths, A. B. A Treatise on Manures....12mo (*Reprinting.*)
Gross, E. Hops....8vo, *5 00
Grossman, J. Ammonia and Its Compounds....12mo, 1 50
Groth, L. A. Welding and Cutting Metals by Gases or Electricity. 8vo, 2 50
Grover, F. Modern Gas and Oil Engines....8vo, *3 00
Gruner, A. Power-loom Weaving....8vo, *3 50
Grunsky, C. E. Topographic Stadia Surveying....16mo, 2 00
Guldner, H. Internal Combustion Engines....(*In Press.*)
Gunther, C. O. Integration....8vo, 1 50
Gurden, R. L. Traverse Tables....folio, half morocco, *7 50
Guy, A. E. Experiments on the Flexure of Beams....8vo, *1 25

Haenig, A. Emery and Emery Industry....8vo, *2 50
Hainbach, R. Pottery Decoration....12mo, 3 50
Hale, A. J. The Manufacture of Chemicals by Electrolysis. 8vo, (*In Press.*)
Hale, W. J. Calculations of General Chemistry....12mo, 1 50
Hall, C. H. Chemistry of Paints and Paint Vehicles....12mo, *2 00
Hall, R. H. Governors and Governing Mechanism....12mo, *2 50
Hall, W. S. Elements of the Differential and Integral Calculus....8vo, 2 75
—— Descriptive Geometry....8vo volume and a 4to atlas, 4 00
Haller, G. F., and Cunningham, E. T. The Tesla Coil....12mo, *1 25
Halsey, F. A. Slide Valve Gears....12mo, 1 50
—— The Use of the Slide Rules....16mo, 0 75
—— Worm and Spiral Gearing....16mo, 0 75

Digitized by Google

Hancock, H. Textbook of Mechanics and Hydrostatics.....8vo, 1 50
Hardy, E. Elementary Principles of Graphic Statics.....12mo, *1 50
Haring, H. Engineering Law.
Vol. I. Law of Contract.....8vo, *4 00
Harper, J. H. Hydraulic Tables on the Flow of Water.....16mo, *2 00
Harris, S. M. Practical Topographical Surveying.....(*In Press.*)
Harrow, B. Eminent Chemists of Our Times: Their Lives and Work. (*In Press.*)
Haskins, C. H. The Galvanometer and Its Uses.....16mo, 1 50
Hatt, J. A. H. The Colorist.....square 12mo, *1 50
Hausbrand, E. Drying by Means of Air and Steam.....12mo, 2 50
—— Evaporating, Condensing and Cooling Apparatus.....8vo, 6 00
Hausmann, E. Telegraph Engineering.....8vo, *3 00
Hausner, A. Manufacture of Preserved Foods and Sweetmeats....8vo, 3 50
Hawkesworth, J. Graphical Handbook for Reinforced Concrete Design. 4to, 2 00
Hay, A. Continuous Current Engineering.....8vo, *2 50
Hayes, H. V. Public Utilities, Their Cost New and Depreciation...8vo, *2 00
—— Public Utilities, Their Fair Present Value and Return.....8vo, *2 00
Heath, F. H. Chemistry of Photography.....8vo. (*In Press.*)
Heather, H. J. S. Electrical Engineering.....8vo, 4 50
Heaviside, O. Electromagnetic Theory. Vols. I and II....8vo, each, (*Reprinting.*)
Vol. III.....8vo (*Reprinting.*)
Heck, R. C. H. The Steam Engine and the Turbine.....8vo, 4 50
—— Steam-Engine and Other Steam Motors. Two Volumes.
Vol. I. Thermodynamics and the Mechanics.....8vo, 4 50
Vol. II. Form, Construction, and Working.....8vo, 5 50
—— Notes on Elementary Kinematics.....8vo, boards, *1 00
—— Graphics of Machine Forces.....8vo, boards, *1 00
Heermann, P. Dyers' Materials.....12mo, 3 00
Hellot, Macquer and D'Apligny. Art of Dyeing Wool, Silk and Cotton. 8vo, *2 00
Hering, C., and Getman, F. H. Standard Tables of Electro-Chemical Equivalents.....12mo, *2 00
Hering, D. W. Essentials of Physics for College Students.....8vo, 2 25
Herington, C. F. Powdered Coal as Fuel.....8vo, 3 00
Herrmann, G. The Graphical Statics of Mechanism.....12mo, 2 00
Herzfeld, J. Testing of Yarns and Textile Fabrics.....8vo. (*New Edition in Preparation.*)
Hildenbrand, B. W. Cable-Making.....16mo, 0 75
Hilditch, T. P. A Concise History of Chemistry.....12mo, *1 50
Hill, M. J. M. The Theory of Proportion.....8vo, *2 50
Hillhouse, P. A. Ship Stability and Trim.....8vo, 4 50
Hiroi, I. Plate Girder Construction.....16mo, 0 75
—— Statically-Indeterminate Stresses.....12mo, 2 50
Hirshfeld, C. F. Engineering Thermodynamics.....16mo, 0 75
Hoar, A. The Submarine Torpedo Boat.....12mo, *2 00
Hobart, H. M. Heavy Electrical Engineering.....8vo, *4 50
—— Design of Static Transformers.....12mo, *2 50
—— Electricity.....8vo, *5 00
—— Electric Trains.....8vo, *4 00
—— Electric Propulsion of Ships.....8vo, *4 00

Digitized by Google

Hobart, J. F. Hard Soldering, Soft Soldering and Brazing.....12mo, 1 25
Hobbs, W. R. P. The Arithmetic of Electrical Measurements....12mo, 0 75
Hoff, J. N. Paint and Varnish Facts and Formulas.....12mo, 1 50
Hole, W. The Distribution of Gas.....8vo, *8 50
Hopkins, N. M. Model Engines and Small Boats.....12mo, 1 25
—— The Outlook for Research and Invention.....12mo. 2 00
Hopkinson, J., Shoolbred, J. N., and Day, R. E. Dynamic Electricity. 16mo. 0 75
Horner, J. Practical Ironfounding.....8vo, *2 00
—— Gear Cutting, in Theory and Practice.....8vo (*Reprinting.*)
Houghton, C. E. The Elements of Mechanics of Materials.....12mo, 2 50
Houstoun, R. A. Studies in Light Production.....12mo, 2 00
Hovenden, F. Practical Mathematics for Young Engineers.....12mo, *1 50
Howe, G. Mathematics for the Practical Man.....12mo, 1 50
Howorth, J. Repairing and Riveting Glass, China and Earthenware. 8vo, paper, *0 50
Hoyt, W. E. Chemistry by Experimentation.....8vo, *0 75
Hubbard, E. The Utilization of Wood-waste.....8vo, *2 50
Hübner, J. Bleaching and Dyeing of Vegetable and Fibrous Materials. 8vo (*Reprinting.*)
Hudson, O. F. Iron and Steel.....8vo, 2 50
Humphreys, A. C. The Business Features of Engineering Practice.8vo, 2 50
Hunter, A. Bridge Work.....8vo. (*In Press.*)
Hurst, G. H. Handbook of the Theory of Color.....8vo, *3 50
—— Dictionary of Chemicals and Raw Products.....8vo, *5 00
—— Lubricating Oils, Fats and Greases.....8vo, *5 00
—— Soaps 8vo, *6 00
Hurst, G. H., and Simmons, W. H. Textile Soaps and Oils.....8vo, 3 50
Hurst, H. E., and Lattey, R. T. Text-book of Physics.....8vo, *3 00
—— Also published in three parts.
Part I. Dynamics and Heat..... 1 50
Part II. Sound and Light..... 1 50
Part III. Magnetism and Electricity..... *1 50
Hutchinson, R. W., Jr. Long Distance Electric Power Transmission. 12mo, *3 00
Hutchinson, R. W., Jr., and Thomas, W. A. Electricity in Mining.12mo, (*In Press.*)
Hyde, E. W. Skew Arches..... .....16mo. 0 75
Hyde, F. S. Solvents, Oils, Gums, Waxes.....8vo, *2 00

Induction Coils 16mo. 0 75
Ingham, A. E. Gearing. A practical treatise.....8vo, *2 50
Ingle, H. Manual of Agricultural Chemistry.....8vo (*In Press.*)
Innes, C. H. Problems in Machine Design.....12mo, *3 00
—— Centrifugal Pumps 12mo, *3 00
—— The Fan 12mo, *4 00

Jacob, A., and [illegible] R. S. On the Designing and Construction of 16mo. 0 75
Jacobs, [illegible] Manufacture.....(*In Press.*)

Digitized by Google

James, F. D. Controllers for Electric Motors....8vo, 1 00
Jehl, F. Manufacture of Carbons....8vo, 5 00
Jennings, A. S. Commercial Paints and Painting....8vo. 2 50
Jennison, F. H. The Manufacture of Lake Pigments..8vo (*In Press.*)
Jepson, G. Cams and the Principles of their Construction....8vo, *1 50
—— Mechanical Drawing....8vo (*In Preparation.*)
Jervis-Smith, F. J. Dynamometers....8vo. 4 00
Jockin, W. Arithmetic of the Gold and Silversmith....12mo, *1 00
Johnson, C. H., and Earle, R. P. Practical Tests for the Electrical Laboratory....(*In Press.*)
Johnson, J. H. Arc Lamps and Accessory Apparatus....12mo, 0 75
Johnson, T. M. Ship Wiring and Fitting....12mo (*Reprinting.*)
Johnston, J. F. W., and Cameron, C. Elements of Agricultural Chemistry and Geology....12mo, 2 60
Joly, J. Radioactivity and Geology....12mo (*Reprinting.*)
Jones, H. C. Electrical Nature of Matter and Radioactivity....12mo, *2 00
—— Nature of Solution....8vo, *3 50
—— New Era in Chemistry....12mo, *2 00
Jones, J. H. Tinplate Industry....8vo, *3 00
Jones, M. W. Testing Raw Materials Used in Paint....12mo, *2 50
Jordan, L. C. Practical Railway Spiral....12mo, leather, *1 50
Jüptner, H. F. V. Siderology: The Science of Iron....8vo, *5 00

Kapp, G. Alternate Current Machinery....16mo, 0 75
Kapper, F. Overhead Transmission Lines....4to, *4 00
Keim, A. W. Prevention of Dampness in Buildings....8vo, *2 50
Keller, S. S., and Knox, W. E. Analytical Geometry and Calculus... 2 00
Kemble, W. T., and Underhill, C. R. The Periodic Law and the Hydrogen Spectrum....8vo, paper, *0 50
Kemp, J. F. Handbook of Rocks....8vo, *1 50
Kennedy, A. B. W., and Thurston, R. H. Kinematics of Machinery. 16mo, 0 75
Kennedy, A. B. W., Unwin, W. C., and Idell, F. E. Compressed Air. 16mo, 0 75
Kennedy, R. Flying Machines; Practice and Design....12mo, 2 50
—— Principles of Aeroplane Construction....8vo, *2 00
Kent, W. Strength of Materials....16mo, 0 75
Kershaw, J. B. C. Fuel, Water and Gas Analysis..8vo (*In Press.*)
—— Electrometallurgy....8vo, 2 50
—— Electro-Thermal Methods of Iron and Steel Production....8vo, *3 00
Kinzbrunner, C. Continuous Current Armatures....8vo, 1 50
—— Testing of Alternating Current Machines....8vo, *2 00
Kinzer, H., and Walter, K. Theory and Practice of Damask Weaving, 8vo, 4 00
Kirkaldy, A. W., and Evans, A. D. History and Economics of Transport....8vo, *3 00
Kirkbride, J. Engraving for Illustration....8vo, *1 00
Kirschke, A. Gas and Oil Engines....12mo, *1 50

Digitized by Google

Klein, J. F. Design of a High-speed Steam-engine 8vo, *5 00
— Physical Significance of Entropy 8vo, *1 50
Klingenberg, G. Large Electric Power Stations 4to, *5 00
Knight, R.-Adm. A. M. Modern Seamanship 8vo, *6 50
— Pocket Edition ..... 12mo, fabrikoid, 3 00
Knott, C. G., and Mackay, J. S. Practical Mathematics 8vo, 2 50
Knox, J. Physico-Chemical Calculations 12mo, 1 50
— Fixation of Atmospheric Nitrogen 12mo, 1 00
Koester, F. Steam-Electric Power Plants 4to, *5 00
— Hydroelectric Developments and Engineering 4to, *5 00
Koller, T. The Utilization of Waste Products 8vo, *5 00
— Cosmetics 8vo, *2 50
Koppe, S. W. Glycerine 12mo, *3 50
Kozmin, P. A. Flour Milling 8vo, 7 50
Krauch, C. Chemical Reagents 8vo, 7 00
Kremann, R. Application of the Physico-Chemical Theory to Technical Process and Manufacturing Methods 8vo, 3 00
Kretchmar, K. Yarn and Warp Sizing 8vo, *5 00

Laffargue, A. Attack in Trench Warfare 16mo, 0 50
Lallier, E. V. Elementary Manual of the Steam Engine 12mo, *2 00
Lambert, T. Lead and Its Compounds 8vo, *3 50
— Bone Products and Manures 8vo, *3 50
Lamborn, L. L. Cottonseed Products 8vo, 4 00
— Modern Soaps, Candles, and Glycerin 8vo, *7 50
Lamprecht, R. Recovery Work After Pit Fires 8vo, 5 00
Lanchester, F. W. Aerial Flight. Two Volumes. 8vo.
Vol. I. Aerodynamics *6 00
Vol. II. Aerodonetics *6 00
Lanchester, F. W. The Flying Machine 8vo, *3 00
— Industrial Engineering: Present and Post-War Outlook 12mo, 1 00
Lange, K. R. By-Products of Coal-Gas Manufacture 12mo, 2 50
La Rue, B. F. Swing Bridges 16mo, 0 75
Lassar-Cohn, Dr. Modern Scientific Chemistry 12mo, 2 25
Latimer, L. H., Field, C. J., and Howell, J. W. Incandescent Electric Lighting 16mo, 0 75
Latta, M. N. Handbook of American Gas-Engineering Practice 8vo, 5 00
— American Producer Gas Practice 4to, *6 00
Laws, B. C. Stability and Equilibrium of Floating Bodies 8vo, 4 50
Lawson, W. R. British Railways. A Financial and Commercial Survey 8vo, 2 00
Leask, A. R. Refrigerating Machinery ..... 12mo (*Reprinting.*)
Lecky, S. T. S. "Wrinkles" in Practical Navigation 8vo, 10 00
— Pocket Edition 12mo, 5 00
— Danger Angle 16mo, 2 50
Le Doux, M. Ice-Making Machines 16mo, 0 75
Leeds, C. C. Mechanical Drawing for Trade Schools ..... oblong 4to, 2 25
— Mechanical Drawing for High and Vocational Schools 4to, 1 50
— Principles of Engineering Drawing ..... 8vo (*In Press.*)
Lefévre, L. Architectural Pottery 4to, 7 00
Lehner, S. Ink Manufacture 8vo, 2 50
Lemstrom, S. Electricity in Agriculture and Horticulture 8vo, *1 50
Letts, E. A. Fundamental Problems in Chemistry 8vo, *2 00
Lewes, W. B. Engine Indicator 16mo, 0 75

Digitized by Google

Lewes, V. B. Liquid and Gaseous Fuels.....8vo, 3 00
—— Carbonization of Coal.....8vo, *5 00
Lewis Automatic Machine Rifle; Operation of.....16mo, *0 60
Licks, H. E. Recreations in Mathematics.....12mo, 1 50
Lieber, B. F. Lieber's Five Letter American Telegraphic Code.....8vo, *15 00
—— —— Spanish Edition.....8vo, *15 00
—— —— French Edition.....8vo, *15 00
—— Terminal Index.....8vo, *2 50
—— Lieber's Appendix.....folio, *15 00
—— —— Handy Tables.....4to, *2 50
—— Bankers and Stockbrokers' Code and Merchants and Shippers' Blank Tables.....8vo, *15 00
—— 100,000,000 Combination Code.....8vo, *10 00
Livermore, V. P., and Williams, J. How to Become a Competent Motorman.....12mo, *1 00
Livingstone, R. Design and Construction of Commutators.....8vo, 4 50
—— Mechanical Design and Construction of Generators.....8vo, 4 50
Lloyd, S. L. Fertilizer Materials.....12mo, 2 00
Lockwood, T. D. Electricity, Magnetism, and Electro-telegraph.....8vo, 2 50
—— Electrical Measurement and the Galvanometer.....12mo, 0 75
Lodge, O. J. Elementary Mechanics.....12mo, 1 50
Loewenstein, L. C., and Crissey, C. P. Centrifugal Pumps.....5 00
Lomax, J. W. Cotton Spinning.....12mo, 1 50
Lord, R. T. Decorative and Fancy Fabrics.....8vo, *3 50
Loring, A. E. A Handbook of the Electromagnetic Telegraph.....16mo, 0 75
Lowy, A. Organic Type Formulas.....0 00
Lubschez, B. J. Perspective.....12mo, *1 50
Lucke, C. E. Gas Engine Design.....8vo, *2 00
—— Power Plants: Design, Efficiency, and Power Costs. 2 vols. (*In Preparation.*)
Luckiesh, M. Color and Its Application.....8vo, 3 50
—— Light and Shade and Their Applications.....8vo, 3 00
—— Visual Illusions.....(*In Preparation.*)
Lunge, G. Coal-tar and Ammonia. Three Volumes.....8vo, *25 00
—— Technical Gas Analysis.....8vo, *4 50
—— Manufacture of Sulphuric Acid and Alkali. Four Volumes.....8vo,
Vol. I. Sulphuric Acid. In three parts.....(*Reprinting.*)
Vol. I. Supplement.....8vo (*Reprinting.*)
Vol. II. Salt Cake, Hydrochloric Acid and Leblanc Soda. In two parts.....(*In Press.*)
Vol. III. Ammonia Soda.....(*In Press.*)
Vol. IV. Electrolytic Methods.....(*In Press.*)
—— Technical Chemists' Handbook.....12mo, leather, *4 00
—— Technical Methods of Chemical Analysis.
Vol. I. In two parts.....
Vol. II. In two parts.....
Vol. III. In two parts.....
The set (3 vols.) complete.....
Luquer, L. M. Minerals in Rock Sections.....

Digitized by Google

acBride, J. D. A Handbook of Practical Shipbuilding, 12mo, fabrikoid, 2 00
acewen, H. A. Food Inspection 8vo, *2 50
ackenzie, N. F. Notes on Irrigation Works 8vo, *2 50
ackie, J. How to Make a Woolen Mill Pay 8vo, *2 00
aguire, Wm. R. Domestic Sanitary Drainage and Plumbing 8vo, 4 00
alcolm, H. W. Submarine Telegraph Cable 9 00
alinovzsky, A. Analysis of Ceramic Materials and Methods of Calculation ..... (*In Press.*)
allet, A. Compound Engines 16mo,
ansfield, A. N. Electro-magnets 16mo, 0 75
arks, E. C. R. Construction of Cranes and Lifting Machinery. 12mo, *2 75
— Manufacture of Iron and Steel Tubes 12mo, 2 50
— Mechanical Engineering Materials 12mo, *1 50
arks, G. C. Hydraulic Power Engineering 8vo, 4 50
arlow, T. G. Drying Machinery and Practice .... 8vo (*Reprinting.*)
arsh, C. F. Concise Treatise on Reinforced Concrete 8vo, *2 50
— Reinforced Concrete Compression Member Diagram. Mounted on Cloth Boards *1 50
arsh, C. F., and Dunn, W. Manual of Reinforced Concrete and Concrete Block Construction ..... 16mo, cloth, 2 00
arshall, W. J., and Sankey, H. R. Gas Engines 8vo, 2 00
artin, G. Triumphs and Wonders of Modern Chemistry 8vo, *3 00
— Modern Chemistry and Its Wonders 8vo, *3 00
artin, N. Properties and Design of Reinforced Concrete 8vo, 1 50
artin, W. D. Hints to Engineers 12mo, 2 00
assie, W. W., and Underhill, C. R. Wireless Telegraphy and Telephony. 12mo, *1 00
athot, R. E. Internal Combustion Engines 8vo, 5 00
aurice, W. Electric Blasting Apparatus and Explosives 8vo, *3 50
— Shot Firer's Guide 8vo, *1 50
axwell, F. Sulphitation in White Sugar Manufacture 12mo, 4 00
axwell, J. C. Matter and Motion 16mo, 0 75
axwell, W. H., and Brown, J. T. Encyclopedia of Municipal and Sanitary Engineering 4to, *10 00
ayer, A. M. Lecture Notes on Physics 8vo, 2 00
cCracken, E. M., and Sampson, C. H. Course in Pattern Making. (*In Press.*)
cCullough, E. Practical Surveying 12mo, 2 50
cCullough, R. S. Mechanical Theory of Heat 8vo, 3 50
cGibbon, W. C. Indicator Diagrams for Marine Engineers 8vo, *3 50
— Marine Engineers' Drawing Book ..... oblong 4to, *2 50
cGibbon, W. C. Marine Engineers Pocketbook 12mo, *4 50
cIntosh, J. G. Technology of Sugar 8vo, *6 00
— Industrial Alcohol 8vo, *3 50
— Manufacture of Varnishes and Kindred Industries. Three Volumes. 8vo.
Vol. I. Refining and Boiling 7 00
Vol. II. ...ls and Oil Varnish Making. (*Reprinting.*)
Vol. III. ...nd Materials ..... (*Reprinting.*)
cKay, C. W... ...iples of the Telephone Business. 8vo. (*In Press.*)

Digitized by Google

McKillop, M., and McKillop, A. D. Efficiency Methods.....12mo, 1 50
McKnight, J. D., and Brown, A. W. Marine Multitubular Boilers.... *1 50
McMaster, J. B. Bridge and Tunnel Centres.....16mo, 0 75
McMechen, F. L. Tests for Ores, Minerals and Metals.....12mo, *1 00
McNair, Jas. B. Citrus By-Products..... .....(*In Press.*)
Meade, A. Modern Gas Works Practice.....8vo, *3 50
Melick, C. W. Dairy Laboratory Guide.....12mo, *1 25
"Mentor." Self-Instruction for Students in Gas Supply. 12mo.
Elementary 2 50
Advanced 2 50
—— Self-Instruction for Students in Gas Engineering. 12mo.
Elementary 2 00
Advanced 2 00
Merivale, J. H. Notes and Formulae for Mining Students.....12mo, 1 00
Merritt, Wm. H. Field Testing for Gold and Silver....16mo, leather, 2 00
Mertens. Tactics and Technique of River Crossings.....8vo, 2 50
Mierzinski, S. Waterproofing of Fabrics.....8vo, 2 50
Miessner, B. F. Radio Dynamics..... .....12mo, *2 00
Miller, G. A. Determinants.....16mo,
Miller, W. J. Introduction to Historical Geology.....12mo, 2 25
Milroy, M. E. W. Home Lace-making.....12mo, *1 00
Mills, C. N. Elementary Mechanics for Engineers.....8vo, *1 00
Mitchell, C. A. Mineral and Aerated Waters.....8vo, *3 00
Mitchell, C. A., and Prideaux, R. M. Fibres Used in Textile and Allied Industries 8vo, 3 50
Mitchell, C. F., and G. A. Building Construction and Drawing. 12mo.
Elementary Course 2 00
Advanced Course 3 00
Mouckton, C. C. F. Radiotelegraphy.....8vo, 2 00
Monteverde, R. D. Vest Pocket Glossary of English-Spanish, Spanish-English Technical Terms.....64mo, leather, *1 00
Montgomery, J. H. Electric Wiring Specifications.....16mo, *1 00
Moore, E. C. S. New Tables for the Complete Solution of Ganguillet and Kutter's Formula 8vo, *6 00
Moore, Harold. Liquid Fuel for Internal Combustion Engines...8vo, 5 00
Morecroft, J. H., and Hehre, F. W. Short Course in Electrical Testing. 8vo, 1 50
Morgan, A. P. Wireless Telegraph Apparatus for Amateurs.....12mo, *1 50
Morrell, R. S., and Waele, A. E. Rubber, Resins, Paints and Varnishes .....8vo (*In Press.*)
Moses, A. J. The Characters of Crystals.....8vo, *2 00
—— and Parsons, C. L. Elements of Mineralogy.....8vo, *3 50
Moss, S. A. Elements of Gas Engine Design.....16mo, 0 75
—— The Lay-out of Corliss Valve Gears.....16mo, 1 00
Mulford, A. C. Boundaries and Landmarks.....12mo, *1 00
Mulford, A. C. Boundaries and Landmarks.....12mo, 1 50
Munby, A. E. Chemistry and Physics of Building Materials....8vo, 2 50
Murphy, J. G. Practical Mining.....16mo, 1 00
Murray, B. M. Chemical Reagents.....8vo (*In Press.*)
Murray, J. A. Soils and Manures.....8vo, 2 00

Nasmith, J. The Student's Cotton Spin
—— Recent Cotton Mill Construction.

Digitized by Google

, G. B., and Heilbron, I. M. Identification of Organic Compounds. 12mo, 1 50

n, R. M. Aeroplane Patents.....8vo, *2 00
F. Searchlights.....8vo (*Reprinting.*)
igin, M. I., and Flett, J. S. James Geikie, the Man and the Geologist.....8vo, 3 50
ging, T. Handbook for Gas Engineers and Managers.....8vo, 7 50
l, F. H., and Drayer, C. E. Engineering as a Career..12mo, cloth, *1 00
G. Ship Construction and Calculations.....8vo, *10 00
r, F. E. Theory of Magnetic Measurements.....12mo, 1 00
t, H. Grammar of Textile Design.....8vo, 7 50
, H. The Telescope.....16mo, 0 75
, J. W. Epitome of Navigation (2 Vols.).....octavo, 15 00
A Complete Set of Nautical Tables with Explanations of Their Use.....octavo, 6 50
, H. B. Laboratory Experiments in General Chemistry.....12mo, *1 00

inor, H. The Gas Engineer's Pocketbook.....12mo, leather, 4 00
G. S., and Lockwood, T. D. Galvanic Circuit.....16mo, 0 75
, J. C. Text-book of Quantitative Chemical Analysis.....8vo, 4 00
by, M. T. M. Surveying.....12mo, 2 00
1, M. A. Standard Polyphase Apparatus and Systems.....8vo, *3 00

s, W. C. C., and Nankivell, A. T. The Science of Hygiene..8vo, *1 75
, A. Industrial Photometry.....8vo, 4 00
er, A. R. Electrical Experiments.....12mo, 0 75
Magnetic Measurements and Experiments.....12mo, 0 75
ly, C. Colliery Manager's Handbook.....8vo, *10 00
r, P. A. M. The Control of Water.....8vo, 6 00
G. D. A. Electrical Engineering Measuring Instruments....8vo, *3 50
, E. J. Chemistry of Essential Oils and Artificial Perfumes.
ol. I. Monographs on Essential Oils..... 9 00
ol. II. Constituents of Essential Oils, Analysis..... 7 00
Foods and Drugs. Two Volumes.
ol. I. The Analysis of Food and Drugs.....8vo, 9 50
ol. II. The Sale of Food and Drugs Acts.....8vo, 3 50
nd Coste, J. H. Chemistry of Pigments.....8vo, *5 00
, L. Notes on Alloys.....8vo, *3 50
Metalliferous Wastes.....8vo, *2 50
Analysis of Ashes and Alloys.....8vo, *2 50
, L. A. Risk and Dangers of Various Occupations.....8vo, *3 50
all, H. F., and Hobart, H. M. Electric Railway Engineering.4to, 7 50
ns, J. L. Land Drainage.....8vo, *1 50
ns, S. J. Malleable Cast Iron.....8vo (*Reprinting.*)
igton, J. R. Higher Mathematics for Chemical Students..12mo, 2 50
Textbook of Thermodynamics.....8vo, *4 00
The Alkali Industry.....8vo, 3 00
, W. H. Electric Power in Mines.....8vo, *4 00
, G. W. L. Wiring Calculations.....12mo, *2 50
tric Mine Signalling Installations.....12mo, *1 50
A.D. The Color Printing of Carpet Yarns.....8vo, *3 50
Matching on Textiles.....8vo, *3 50
ing.....8vo, *3 50

Digitized by Google

Paulding, C. P. Condensation of Steam in Covered and Bare Pipes 8vo,
—— Transmission of Heat through Cold-storage Insulation 12mo,
Payne, D. W. Iron Founders' Manual 8vo,
Peddie, R. A. Engineering and Metallurgical Books 12mo,
Peirce, B. System of Analytic Mechanics 4to,
—— Linear Associative Algebra 4to,
Perkin, F. M., and Jaggers, E. M. Elementary Chemistry 12mo,
Perrin, J. Atoms 8vo,
Perrine, F. A. C. Conductors for Electrical Distribution 8vo,
Petit, G. White Lead and Zinc White Paints 8vo,
Petit, R. How to Build an Aeroplane 8vo,
Pettit, Lieut. J. S. Graphic Processes 16mo,
Philbrick, P. H. Beams and Girders 16mo,
Phin, J. Seven Follies of Science 12mo,
Pickworth, C. N. Logarithms for Beginners 12mo, boards,
—— The Slide Rule 12mo,
Pilcher, R. B. The Profession of Chemistry 12mo (*In Press*)
Pilcher, R. B., and Butler-Jones, F. What Industry Owes to Chemical Science 12mo,
Plattner's Manual of Blow-pipe Analysis. Eighth Edition, revised 8vo,
Plympton, G. W. The Aneroid Barometer 16mo,
—— How to Become an Engineer 16mo,
—— Van Nostrand's Table Book 16mo,
Pochet, M. L. Steam Injectors 16mo,
Pocket Logarithms to Four Places 16mo, leather,
Polleyn, F. Dressings and Finishings for Textile Fabrics 8vo,
Pope, F. G. Organic Chemistry 12mo,
Pope, F. L. Modern Practice of the Electric Telegraph 8vo,
Popplewell, W. C. Prevention of Smoke 8vo,
—— Strength of Materials 8vo,
Porritt, B. D. The Chemistry of Rubber 12mo,
Porter, J. R. Helicopter Flying Machine 12mo,
Potts, H. E. Chemistry of the Rubber Industry 8vo,
Practical Compounding of Oils, Tallows and Grease 8vo,
Pratt, A. E. The Iron Industry 8vo (*In Press*)
—— The Steel Industry 8vo (*In Press*)
Pratt, Jas. A. Elementary Machine Shop Practice (*In Press*)
Pratt, K. Boiler Draught 12mo,
Prelini, C. Earth and Rock Excavation 8vo,
—— Graphical Determination of Earth Slopes 8vo,
—— Tunneling. New Edition 8vo,
—— Dredging. A Practical Treatise 8vo,
Prescott, A. B., and Johnson, O. C. Qualitative Chemical Analysis 8vo,
Prescott, A. B., and Sullivan, E. C. First Book in Qualitative Chemistry
Prideaux, E. B. R. Problems in Physical Chemistry 8vo,
—— The Theory and Use of Indicators 8vo,
Prince, G. T. Flow of Water 12mo,
Pull, E. Modern Steam Boilers 8vo,
Pullen, W. W. F. Application of Graphic Methods to the Design of Structures
—— Injectors: Theory, Construction and Working
—— Indicator Diagrams
—— Engine Testing

Digitized by Google

y, H. F. P. The Diesel Engine Design.....8vo (*In Press.*)
, A. Gas and Coal-dust Firing.....8vo, *2 50

r, G. W. Mechanics of Ventilation.....16mo, 0 75
Potable Water 16mo, 0 75
Treatment of Septic Sewage.....16mo, 0 75
and Baker, M. N. Sewage Disposal in the United States....4to, 6 00
s, H. P. Sewage Disposal Works..... .....8vo, *4 00
au, P. Enamels and Enamelling.....8vo, *5 00
ine, W. J. M., and Bamber, E. F. A Mechanical Text-book..8vo, 4 00
Civil Engineering 8vo. 7 50
Machinery and Millwork.....8vo, 6 00
The Steam-engine and Other Prime Movers.....8vo, 6 00
ine, W. J. M., and Bamber, E. F. A Mechanical Text-book....8vo, 3 50
ael, F. C. Localization of Faults in Electric Light and Power Mains. 8vo, 3 50
, E. Electric Arc Phenomena.....8vo, 2 00
bone, R. L. B. Simple Jewellery.....8vo, 2 50
enberger, F. The Theory of the Recoil Guns.....8vo, *5 00
enstrauch, W. Notes on the Elements of Machine Design. 8vo, boards, *1 50
enstrauch, W., and Williams, J. T. Machine Drafting and Empirical Design.
Part I. Machine Drafting.....8vo, 1 50
Part II. Empirical Design.....(*In Preparation.*)
nond, E. B. Alternating Current Engineering.....12mo, *2 50
er, H. Silk Throwing and Waste Silk Spinning.....8vo,
es for the Color, Paint, Varnish, Oil, Soap and Drysaltery Trades, 8vo, *5 00
es for Flint Glass Making.....12mo, *5 00
ern, J. B., and Savin, J. Bells, Telephones.....16mo, 0 75
rove, H. S. Experimental Mensuration.....12mo, 1 50
, S. Turbines Applied to Marine Propulsion..... *5 00
's Engineers' Handbook.....8vo, *9 00
Key to the Nineteenth Edition of Reed's Engineers' Handbook..8vo, 4 00
Useful Hints to Sea-going Engineers.....12mo, 3 00
, E. E. Introduction to Research in Organic Chemistry. (*In Press.*)
hardt, C. W. Lettering for Draftsmen, Engineers, and Students. oblong 4to, boards, 1 00
hardt, C. W. The Technic of Mechanical Drafting, oblong, 4to, boards, *1 00
er, F. Hardening and Tempering of Steel.....12mo, 2 50
er, N. Faults in the Manufacture of Woolen Goods.....8vo, 2 50
Spinning and Weaving Calculations.....8vo, *5 00
vick, W. G. Marble and Marble Working....8vo (*Reprinting.*)
eaux, F. The Constructor.....4to, 4 00
Jean. The Range of Electric Searchlight Projectors.....8vo, (*Reprinting.*)
olds, O., and Idell, F. [illegible] Expansion Engines.....16mo, 0 75
d, G. F. Simple [illegible]k.....12mo, *1 25
d, G. W. [illegible].....8vo, 3 50
es, H. J. [illegible].....8vo, 5 00
J. [illegible] taining the Differ- 12mo, 0 50

Digitized by Google

Richards, W. A. Forging of Iron and Steel.....12mo,
Richards, W. A., and North, H. B. Manual of Cement Testing.....12mo,
Richardson, J. The Modern Steam Engine.....8vo,
Richardson, S. S. Magnetism and Electricity.....12mo,
Rideal, E. K. Industrial Electrometallurgy.....8vo,
—— The Rare Earths and Metals.....8vo (*In Press.*)
Rideal, S. Glue and Glue Testing.....8vo,
—— The Carbohydrates.....8vo (*In Press.*)
Riesenberg, F. The Men on Deck.....12mo,
—— Standard Seamanship for the Merchant Marine.12mo (*In Press.*)
Rimmer, E. J. Boiler Explosions, Collapses and Mishaps.....8vo,
Rings, F. Reinforced Concrete in Theory and Practice.....12mo,
—— Reinforced Concrete Bridges.....4to,
Ripper, W. Course of Instruction in Machine Drawing.....folio,
Roberts, F. C. Figure of the Earth.....16mo,
Roberts, J., Jr. Laboratory Work in Electrical Engineering.....8vo,
Robertson, L. S. Water-tube Boilers.....8vo,
Robinson, J. B. Architectural Composition.....8vo,
Robinson, S. W. Practical Treatise on the Teeth of Wheels..16mo,
—— Railroad Economics.....16mo,
—— Wrought Iron Bridge Members.....16mo,
Robson, J. H. Machine Drawing and Sketching.....8vo,
Roebling, J. A. Long and Short Span Railway Bridges.....folio,
Rogers, A. A Laboratory Guide of Industrial Chemistry.....8vo,
—— Elements of Industrial Chemistry.....12mo,
—— Manual of Industrial Chemistry.....8vo,
Rogers, F. Magnetism of Iron Vessels.....16mo,
Rohland, P. Colloidal and Crystalloidal State of Matter.....12mo,
(*Reprinting.*)

Rollinson, C. Alphabets.....Oblong, 12mo,
Rose, J. The Pattern-makers' Assistant.....8vo,
—— Key to Engines and Engine-running.....12mo,
Rose, T. K. The Precious Metals.....8vo,
Rosenhain, W. Glass Manufacture.....8vo,
—— Physical Metallurgy, An Introduction to.....8vo,
Roth, W. A. Physical Chemistry.....8vo,
Rowan, F. J. Practical Physics of the Modern Steam-boiler.....8vo,
—— and Idell, F. E. Boiler Incrustation and Corrosion.....16mo,
Roxburgh, W. General Foundry Practice.....8vo,
Ruhmer, E. Wireless Telephony.....8vo,
Russell, A. Theory of Electric Cables and Networks.....8vo,
Rust, A. Practical Tables for Navigators and Aviators.....8vo,
Rutley, F. Elements of Mineralogy.....12mo,

Sandeman, E. A. Notes on the Manufacture of Earthenware...12mo,
Sanford, P. G. Nitro-explosives.....8vo,
Saunders, C. H. Handbook of Practical Mechanics.....16mo, leather,
Sayers, H. M. Brakes for Tram Cars.....8vo,
Schaefer, C. T. Motor Truck Design.....8vo,
Scheele, C. W. Chemical Essays.....8vo,
Scheithauer, W. Shale Oils and Tars.....8vo,

Digitized by Google

:rer, R. Casein.....8vo, 3 50
drowitz, P. Rubber, Its Production and Industrial Uses.....8vo, *6 00
ndler, K. Iron and Steel Construction Works.....12mo, *2 00
nall, C. N. First Course in Analytic Geometry, Plane and Solid. 12mo, half leather, *1 75
and Shack, S. M. Elements of Plane Geometry.....12mo, 1 25
warz, E. H. L. Causal Geology.....8vo, *3 00
neer, L. Flow of Water.....8vo, 1 50
weizer, V. Distillations of Resins.....5vo, 5 00
:t, A. H. Reinforced Concrete in Practice.....12mo, 2 00
tt, W. W. Qualitative Analysis. A Laboratory Manual. New Edition 3 00
- Standard Methods of Chemical Analysis.....8vo, *6 00
bner, J. M. Engineers' and Mechanics' Companion..16mo, leather, 1 50
dder, H. Electrical Conductivity and Ionization Constants of Organic Compounds.....8vo, *3 00
manship, Lectures on.....12mo, 2 00
rle, A. B. Modern Brickmaking.....8vo (*In Press.*)
- Cement, Concrete and Bricks.....8vo, 3 00
rle, G. M. "Sumners' Method." Condensed and Improved. 16mo, 0 75
:ton, A. E. Manual of Marine Engineering.....8vo, 10 00
:ton, A. E., and Rounthwaite, H. M. Pocket-book of Marine Engineering.....16mo, leather, 5 00
:ligmann, T., Torrilhon, G. L., and Falconnet, H. India Rubber and Gutta Percha 8vo, 6 00
dell, A. Solubilities of Inorganic and Organic Substances....8vo, 7 50
lew, W. H. Steel Rails.....4to, *10 00
- Railway Maintenance Engineering.....12mo, 3 00
:ter, G. Outlines of Physical Chemistry.....12mo, *2 50
- Text-book of Inorganic Chemistry.....12mo, *3 00
ver, G. F. Electric Engineering Experiments.....8vo, boards, *1 00
ver, G. F., and Townsend, F. Laboratory and Factory Tests in Electrical Engineering.....8vo, *2 50
wall, C. H. Wireless Telegraphy.....8vo, *2 00
- Lessons in Telegraphy.....12mo, *1 00
:ton, A. H. Fuel and Refractory Materials.....12mo (*Reprinting.*)
- Chemistry of the Materials of Engineering.....12mo, *3 00
- Alloys (Non-Ferrous) 8vo, 3 50
:xton, A. H., and Primrose, J. S. G. The Metallurgy of Iron and Steel. 8vo, *6 50
ymour, A. Modern Printing Inks.....8vo, 3 00
aw, Henry S. H. Mechanical Integrators.....16mo, 0 75
aw, S. History of the Staffordshire Potteries.....8vo, 2 50
- Chemistry of Compounds Used in Porcelain Manufacture....8vo, *6 00
aw, T. R. Driving of Machine Tools.....12mo, *2 00
- Precision Grinding Machines.....12mo, 5 00
aw, W. N. Forecasting Weather.....8vo (*Reprinting.*)
eldon, S., and Hausmann, E. Dynamo Electric Machinery, A.C. and D.C.....8vo (*In Press.*)
- Electric Traction and Transmission Engineering.....12mo, 2 50
- Physical Laboratory Experiments, for Engineering Students..8vo, *1 25

Digitized by Google

Sherriff, F. F. Oil Merchants' Manual and Oil Trade Ready Reckoner, 8vo, 3 50
Shields, J. E. Notes on Engineering Construction 12mo, 1 50
Shreve, S. H. Strength of Bridges and Roofs 8vo, 3 50
Shunk, W. F. The Field Engineer ..... 12mo, fabrikoid, 2 50
Silverman, A., and Harvey, A. W. Laboratory Directions and Study Questions in Inorganic Chemistry ..... 4to, loose leaf, 2 00
Simmons, W. H. Fats, Waxes and Essential Oils. .8vo (*In Press.*)
Simmons, W. H., and Appleton, H. A. Handbook of Soap Manufacture, 8vo, *3 00
Simmons, W. H., and Mitchell, C. A. Edible Fats and Oils 8vo, *3 50
Simpson, G. The Naval Constructor ..... 12mo, fabrikoid, *5 00
Simpson, W. Foundations ..... 8vo. (*In Press.*)
Sinclair, A. Development of the Locomotive Engine. . . 8vo, half leather, 5 00
Sindall, R. W. Manufacture of Paper ..... 8vo (*Reprinting.*)
Sindall, R. W., and Bacon, W. N. The Testing of Wood Pulp . . . 8vo, (*Reprinting.*)
—— Wood and Cellulose ..... 8vo (*In Press.*)
Sloane, T. O'C. Elementary Electrical Calculations 12mo, *2 00
Smallwood, J. C. Mechanical Laboratory Methods . . . . 12mo, fabrikoid, 3 00
Smith, C. A. M. Handbook of Testing, MATERIALS 8vo, *2 50
Smith, C. A. M., and Warren, A. G. New Steam Tables 8vo, *1 25
Smith, C. F. Practical Alternating Currents and Testing 8vo, *3 50
—— Practical Testing of Dynamos and Motors 8vo, *3 00
Smith, F. E. Handbook of General Instruction for Mechanics . . . 12mo, 1 50
Smith, G. C. Trinitrotoluenes and Mono- and Dinitrotoluenes, Their Manufacture and Properties 12mo, 2 00
Smith, H. G. Minerals and the Microscope 12mo, 2 00
Smith, J. C. Manufacture of Paint 8vo, *5 00
Smith, R. H. Principles of Machine Work 12mo,
—— Advanced Machine Work 12mo, *3 00
Smith, W. Chemistry of Hat Manufacturing 12mo, *3 50
Snell, F. D. Calorimetric Analysis ..... 12mo (*In Press.*)
Snow, W. G., and Nolan, T. Ventilation of Buildings 16mo, 0 75
Soddy, F. Radioactivity ..... 8vo (*Reprinting.*)
Solomon, M. Electric Lamps 8vo, 2 00
Somerscales, A. N. Mechanics for Marine Engineers 12mo, 2 50
—— Mechanical and Marine Engineering Science 8vo, *5 00
Sothern, J. W. The Marine Steam Turbine 8vo, *12 50
—— Verbal Notes and Sketches for Marine Engineers 8vo, *12 50
—— Marine Engine Indicator Cards 8vo, 4 50
Sothern, J. W., and Sothern, R. M. Simple Problems in Marine Engineering Design 12mo, 3 00
Souster, E. G. W. Design of Factory and Industrial Buildings . . . 8vo. 4 00
Southcombe, J. E. Chemistry of the Oil Industries 8vo, 3 50
Soxhlet, D. H. Dyeing and Staining Marble 8vo, 2 50
Spangenburg, L. Fatigue of Metals 16mo, 0 75
Specht, G. J., Hardy, A. S., McMaster, J. B., and Walling. Topographical Surveying 16mo, 0 75
Spencer, A. S. Design of Steel-Framed Sheds 8vo, *3 50
Spiegel, L. Chemical Constitution and Physiological Action 12mo, 1 25

Digitized by Google

ıgue, E. H. Hydraulics	12mo,	2 00
Elements of Graphic Statics	8vo,	2 00
Stability of Masonry	12mo,	2 00
Elementary Mathematics for Engineers	12mo,	2 00
Stability of Arches	12mo,	2 00
Strength of Structural Elements	12mo,	2 00
Moving Loads by Influence Lines and Other Methods	12mo,	2 00
ıl, A. W. Transmission of Power	16mo,	
l, A. W., and Woods, A. T. Elementary Mechanism	12mo,	*2 00
ıdage, H. C. Leatherworkers' Manual	8vo,	*3 50
Sealing Waxes, Wafers, and Other Adhesives	8vo,	*2 50
Agglutinants of All Kinds for All Purposes	12mo,	3 50
ıley, H. Practical Applied Physics	(*In Press.*)	
ısbie, J. H. Iron and Steel	8vo,	2 50
ıdman, F. M. Unit Photography	12mo,	*2 00
:her, G. E. Cork. Its Origin and Industrial Uses	12mo,	1 00
inheil, A., and Voit, E. Applied Optics. Vols. I. and II.	8vo, Each,	5 00
– Two Volumes	Set,	9 00
nman, D. B. Suspension Bridges and Cantilevers. (Science Series No. 127.)		0 75
– Melan's Steel Arches and Suspension Bridges	8vo,	*3 00
vens, A. B. Arithmetic of Pharmacy	12mo,	1 50
vens, E. J. Field Telephones and Telegraphs		1 20
vens, H. P. Paper Mill Chemist	16mo,	4 00
vens, J. S. Theory of Measurements	12mo,	*1 25
venson, J. L. Blast-Furnace Calculations	12mo, leather,	2 50
wart, G. Modern Steam Traps	12mo,	*1 75
es, A. Tables for Field Engineers	12mo,	1 00
dola, A. Steam Turbines	8vo,	5 00
ne, E. W. Elements of Radiotelegraphy	12mo, fabrikoid,	2 50
ne, H. The Timbers of Commerce	8vo,	4 00
pes, M. The Study of Plant Life	8vo,	2 00
lborough, J. J., and James, T. C. Practical Organic Chemistry	12mo,	2 50
ffling, E. R. Treatise on the Art of Glass Painting	8vo,	*3 50
llivan, T. V., and Underwood, N. Testing and Valuation of Building and Engineering Materials	(*In Press.*)	
therland, D. A. The Petroleum Industry	8vo (*In Press.*)	
ınson, C. L. Handbook on Piping	8vo,	4 00
– Essentials of Drafting	8vo,	1 75
– Mechanical and Machine Drawing and Design	(*In Press.*)	
an, K. Patents, Designs and Trade Marks	8vo,	2 00
inburne, J., Wordingham, C. H., and Martin, T. C. Electric Currents.	16mo,	0 75
oope, C. W. Lessons in Practical Electricity	12mo,	*2 00
ilfer, L. Bleaching Linen and Cotton Yarn and Fabrics	8vo,	7 00
te, J. S. Surcharged and Different Forms of Retaining-walls	16mo,	0 75
ylor, F. N. Small Water Supplies	12mo,	*2 50
– Masonry in Civil Engineering	8vo,	*2 50
ylor, W. T. Electric Cable Transmission and Calculation.	(*In Press.*)	
– Calculation of Electric Conductors	4to (*In Press.*)	
mpleton, W. Practical Mechanic's Workshop Companion.	12mo, morocco,	2 00
nney, E. H. Test Methods for Steam Power Plants	12mo,	3 00
rry, H. L. India Rubber and its Manufacture	8vo (*Reprinting.*)	

Digitized by Google

Thayer, H. R. Structural Design. 8vo.
- **Vol. I. Elements of Structural Design** 3
- **Vol. II. Design of Simple Structures** 4
- **Vol. III. Design of Advanced Structures** ..... *(In Preparation.)*

—— **Foundations and Masonry** ..... *(In Preparation.)*

Thiess, J. B., and Joy, G. A. Toll Telephone Practice 8vo,

Thom, C., and Jones, W. H. Telegraphic Connections ..... oblong, 12mo,

Thomas, C. W. Paper-makers' Handbook ..... *(In Press.)*

Thomas, J. B. Strength of Ships 8vo,

Thomas, Robt. G. Applied Calculus 12mo,

Thompson, A. B. Oil Fields of Russia 4to,

—— **Oil Field Development** .....

Thompson, S. P. Dynamo Electric Machines 16mo,

Thompson, W. P. Handbook of Patent Law of All Countries 16mo,

Thomson, G. Modern Sanitary Engineering 12mo,

Thomson, G. S. Milk and Cream Testing 12mo,

—— **Modern Sanitary Engineering, House Drainage, etc** 8vo,

Thornley, T. Cotton Combing Machines 8vo,

—— **Cotton Waste** 8vo,

—— **Cotton Spinning.** 8vo.
- **First Year** .....
- **Second Year** .....
- **Third Year** .....

Thurso, J. W. Modern Turbine Practice 8vo,

Tidy, C. Meymott. Treatment of Sewage 16mo,

Tilmans, J. Water Purification and Sewage Disposal 8vo,

Tinney, W. H. Gold-mining Machinery 8vo,

Titherley, A. W. Laboratory Course of Organic Chemistry 8vo,

Tizard, H. T. Indicators ..... *(In Press.)*

Toch, M. Chemistry and Technology of Paints 8vo,

—— **Materials for Permanent Painting** 12mo,

Tod, J., and McGibbon, W. C. Marine Engineers' Board of Trade Examinations 8vo,

Todd, J., and Whall, W. B. Practical Seamanship 8vo,

Townsend, F. Alternating Current Engineering ..... 8vo, boards,

Townsend, J. S. Ionization of Gases by Collision 8vo,

Transactions of the American Institute of Chemical Engineers, 8vo.
- **Vol. I. to XI., 1908-1918** ..... 8vo, each,

Traverse Tables 16mo,

Treiber, E. Foundry Machinery 12mo,

Trinks, W. Governors and Governing of Prime Movers 8vo,

Trinks, W., and Housum, C. Shaft Governors 16mo,

Trowbridge, W. P. Turbine Wheels 16mo,

Tucker, J. H. A Manual of Sugar Analysis 8vo,

Turnbull, Jr., J., and Robinson, S. W. A Treatise on the Compound Steam-engine 16mo,

Turner, H. Worsted Spinners' Handbook 12mo,

Turrill, S. M. Elementary Course in Perspective 12mo,

Twyford, H. B. Purchasing 8vo,

—— **Storing, Its Economic Aspects and Proper Methods** 8vo,

Digitized by Google

Herhill, C. R. Solenoids, Electromagnets and Electromagnetic Windings 12mo, 3 00
Herwood, N., and Sullivan, T. V. Chemistry and Technology of Printing Inks 8vo, *3 00
Huhart, J. W. Electro-plating 12mo, 2 00
— **Electrotyping** 12mo, 2 00
Horne, P. O. G. Design of Simple Steel Bridges 8vo, *4 00

Icher, F. Food Inspector's Handbook 12mo,
In Nostrand's Chemical Annual. Fourth issue 1918. fabrikoid, 12mo, *3 00
— Year Book of Mechanical Engineering Data ..... (*In Press.*)
In Wagenen, T. F. Manual of Hydraulic Mining 16mo, 1 00
Iga, Baron Von. Logarithmic Tables 8vo, 2 50
Incent, C. Ammonia and its Compounds. Trans. by M. J. Salter. 8vo, *2 50
Incent, C. Ammonia and its Compounds 8vo, 2 50
Irgin, R. Z. Coal Mine Management ..... (*In Press.*)
Ilk, C. Haulage and Winding Appliances 8vo, *4 00
In Georgievics, G. Chemical Technology of Textile Fibres 8vo,
—Chemistry of Dyestuffs ..... 8vo, (*New Edition in Preparation.*)
Ise, G. L. Graphic Method for Solving Certain Questions in Arithmetic and Algebra 16mo, 0 75
Ismaer, A. Ozone 8vo, *2 50

Iabner, R. Ventilation in Mines 8vo, 5 00
Iadmore, T. M. Elementary Chemical Theory 12mo, *1 50
Iagner, E. Preserving Fruits, Vegetables, and Meat 12mo, *2 50
Iagner, H. E., and Edwards, H. W. Railway Engineering Estimates. (*In Press.*)
Iagner, J. B. Seasoning of Wood 8vo, 3 00
Ialdram, P. J. Principles of Structural Mechanics 12mo, 4 00
Ialker, F. Dynamo Building 16mo, 0 75
Ialker, J. Organic Chemistry for Students of Medicine 8vo, 4 00
Ialker, S. F. Steam Boilers, Engines and Turbines 8vo, 3 00
— Refrigeration, Heating and Ventilation on Shipboard 12mo, *2 50
— Electricity in Mining 8vo, *4 50
— Electric Wiring and Fitting 8vo, 2 50
Iallis-Tayler, A. J. Bearings and Lubrication 8vo, *1 50
— Aerial or Wire Ropeways ..... 8vo (*Reprinting.*)
— Preservation of Wood 8vo, 4 00
— Refrigeration, Cold Storage and Ice Making 8vo, 5 50
— Sugar Machinery 12mo, 3 00
Ialsh, J. J. Chemistry and Physics of Mining and Mine Ventilation, 12mo, 2 50
Ianklyn, J. A. Water Analysis 12mo, 2 00
Iansbrough, W. D. The A B C of the Differential Calculus 12mo, *2 50
— Slide Valves 12mo, *2 00
Iaring, Jr., G. E. Sanitary Conditions 16mo, 0 75
— Sewerage and Land Drainage *6 00
— Modern Methods of Sewage Disposal 12mo, 2 00
— How to Drain a House 12mo, 1 25

Digitized by Google

Warnes, A. R. Coal Tar Distillation.....8vo, *5 00
Warren, F. D. Handbook on Reinforced Concrete.....12mo, *2 50
Watkins, A. Photography.....8vo, 3 50
Watson, E. P. Small Engines and Boilers.....12mo, 1 25
Watt, A. Electro-plating and Electro-refining of Metals.....8vo, 5 00
—— **Electro-metallurgy**.....12mo, 1 00
—— **Paper-Making**.....8vo, 3 75
—— **Leather Manufacture**.....8vo, 6 00
—— **The Art of Soap Making**.....8vo, 4 00
Webb, H. L. Guide to the Testing of Insulated Wires and Cables.....12mo, 1 00
Wegmann, Edward. Conveyance and Distribution of Water for Water Supply.....8vo, 5 00
Weisbach, J. A Manual of Theoretical Mechanics.....8vo, *6 00
Weisbach, J., and Herrmann, G. Mechanics of Air Machinery.....8vo, *3 75
Wells, M. B. Steel Bridge Designing.....8vo, *2 50
Wells, Robt. Ornamental Confectionery.....12mo, 3 00
Weston, E. B. Loss of Head Due to Friction of Water in Pipes.....12mo, 2 00
Wheatley, O. Ornamental Cement Work.....8vo, *2 50
Whipple, S. An Elementary and Practical Treatise on Bridge Building.....8vo, 3 00
White, C. H. Methods of Metallurgical Analysis.....12mo, 2 50
White, G. F. Qualitative Chemical Analysis.....12mo, 1 25
White, G. T. Toothed Gearing.....12mo, *2 00
White, H. J. Oil Tank Steamers.....12mo, 1 50
Whitelaw, John. Surveying.....8vo, 4 50
Whittaker, C. M. The Application of the Coal Tar Dyestuffs.....8vo, 3 50
Widmer, E. J. Military Balloons.....8vo, 3 00
Wilcox, R. M. Cantilever Bridges.....16mo, 0 75
Wilda, H. Steam Turbines.....12mo, 2 50
—— **Cranes and Hoists**.....12mo, 2 50
Wilkinson, H. D. Submarine Cable Laying and Repairing.....8vo, (*Reprinting*)
Williamson, J. Surveying.....8vo, *3 00
Williamson, R. S. Practical Tables in Meteorology and Hypsometry.....4to, 2 50
Wilson, F. J., and Heilbron, I. M. Chemical Theory and Calculations.....12mo, *1 25
Wilson, J. F. Essentials of Electrical Engineering.....8vo, 2 50
Wimperis, H. E. Internal Combustion Engine.....8vo, *3 00
—— **Application of Power to Road Transport**.....12mo, *1 50
—— **Primer of Internal Combustion Engine**.....12mo, 1 00
Winchell, N. H., and A. N. Elements of Optical Mineralogy.....8vo, *3 50
Winslow, A. Stadia Surveying.....16mo, 0 75
Wisser, Lieut. J. P. Explosive Materials.....16mo,
——**Modern Gun Cotton**.....16mo, 0 75
Wolff, C. E. Modern Locomotive Practice.....8vo, *4 00
Wood, De V. Luminiferous Aether.....16mo, 0 75
Wood, J. K. Chemistry of Dyeing.....12mo, 1 00
Worden, E. C. The Nitrocellulose Industry. Two Volumes.....8vo, *10 00
—— **Technology of Cellulose Esters. In 10 volumes. 8vo.**
Vol. VIII. Cellulose Acetate.....*5 00

Digitized by Google

h, H. Organometallic Compounds of Zinc and Magnesium..12mo, 1 00
ght, A. C. Analysis of Oils and Allied Substances.....8vo, *3 50
ght, A. C. Simple Method for Testing Painters' Materials...8vo, 2 50
ght, F. W. Design of a Condensing Plant..12mo (*Reprinting.*)
ght, H. E. Handy Book for Brewers.....8vo, *6 00
ght, J. Testing, Fault Finding, etc., for Wiremen.....16mo, 0 50
ght, T. W. Elements of Mechanics.....8vo, *2 50
ght, T. W., and Hayford, J. F. Adjustment of Observations...8vo, *3 00
nne, W. E., and Sparagen, W. Handbook of Engineering Mathematics 12mo, 2 00

der, J. H., and Wharen, G. B. Locomotive Valves and Valve Gears, 8vo, *3 00
ung, J. E. Electrical Testing for Telegraph Engineers.....8vo, *4 00
ung, R. B. The Banket.....8vo, 3 50
ungson. Slide Valve and Valve Gears.....8vo, 3 00

hner, R. Transmission of Power.....16mo,
ner, A. Technical Thermodynamics. Two Volumes.....8vo, 8 00
mmer, G. F. Mechanical Handling and Storing of Materials....4to, 15 00
—— Mechanical Handling of Material and Its National Importance During and After the War.....4to, 4 00
ipser, J. Textile Raw Materials.....8vo, 5 00
ur Nedden, F. Engineering Workshop Machines and Processes..8vo, 2 00

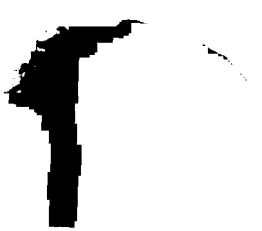

Digitized by Google

Digitized by Google

Digitized by Google

D. VAN NOSTRAND COMPANY

are prepared to supply, either from their complete stock or at short notice,

Any Technical or Scientific Book

In addition to publishing a very large and varied number of SCIENTIFIC AND ENGINEERING BOOKS, D. Van Nostrand Company have on hand the largest assortment in the United States of such books issued by American and foreign publishers.

All inquiries are cheerfully and carefully answered and complete catalogs sent free on request.

---

25 PARK PLACE - - - NEW YORK

151-12-2

Digitized by Google

Digitized by Google

Digitized by Google

Digitized by Google

Digitized by Google